INSTALLATION INSTRUCTIONS
4246 MIXER/GRINDER LONG LEG SET

1. Remove the four leg assemblies, alignment bracket, primer, adhesive, and hardware from the packaging material.
2. The two legs with rigid casters must be mounted on the front end (cylinder end) of the mixer/grinder. The two legs with swivel casters are mounted on the opposite end of the machine.
3. Remove the hex nut, flat washer, and lockwasher from the threaded stud on top of the legs with rigid casters.
4. Set this dimension (See Fig. 1) during application of primer 544434-2 and adhesive 526407. Apply primer to threaded stud, allow to dry, and apply adhesive to threaded stud.
5. With the lower frame side panels off the machine, insert the stud through the leg mounting hole (one on each side of the front end of the machine).
6. Place the flat washer on the stud, followed by the lockwasher and then the hex nut. Tighten the hex nut with a $^{15}/_{16}$" socket.
7. Remove the hex nut, flat washer, and lockwasher from the threaded stud on top of the legs with swivel casters.
8. Repeat step 4 for the swivel casters and assemble the two legs in the mounting holes located in the opposite end of the frame.
9. The adhesive requires ½ hour cure time.
10. The height of each leg can be adjusted by loosening the two set screws located at the bottom of the outer leg tube (See Fig. 2).
11. When the inner leg post and caster are turned inside the outer leg tube the height of the leg can be raised or lowered.

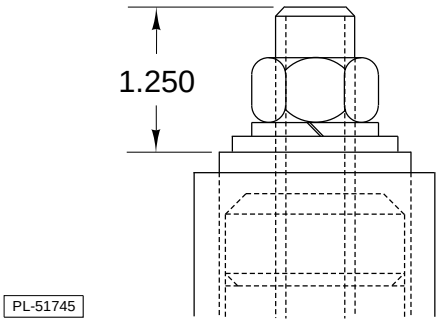

Fig. 1

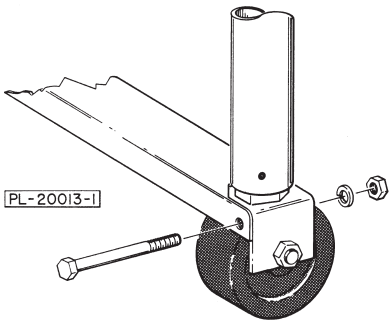

Fig. 2

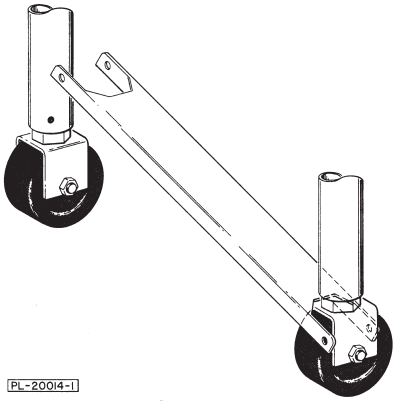

Fig. 3

12. The height of each of the four legs should be adjusted such that the machine is level at its desired operating height.
13. Install the alignment bracket between the two rigid casters as shown in Fig. 3. Insert the ¼-20 x 2¾ screw through its mounting hole, under the caster saddle and through the hole on the other side of the bracket, as shown in Fig. 2.
14. The two rigid casters on the front of the machine will be parallel to each other and oriented so that the wheel will roll in the front-to-back direction only. (See Fig. 3).
15. At this point all set screws (two in each leg) must be tightened to lock each leg assembly and maintain the machine at its correct height.