HOBART

INSTRUCTION MANUAL

... with Replacement Parts

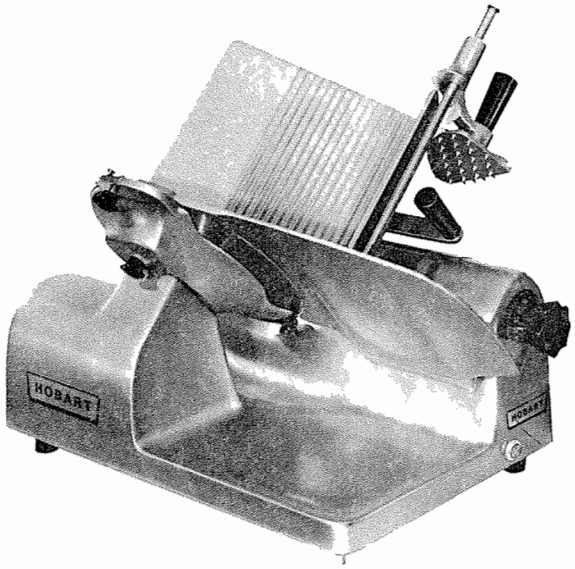

MODEL 1612 SHOWN

SLICERS

(INCLUDES MOTOR PARTS)

1612	ML-19515
1712	ML-19525
1712R	ML-19526

THIS MANUAL REPLACES AND SHOULD BE USED INSTEAD OF FORMS 12832B, 12836B & 12887A FOR REPLACEMENT PARTS.

A product of HOBART CORPORATION TROY, OHIO 45374

FORM 14284 (Rev. B) (7-85)

Installation, Operation and Care of MODELS 1612, 1712, & 1712R SLICERS

SAVE THESE INSTRUCTIONS

GENERAL

The Hobart Models 1612, 1712, and 1712R Slicers are equipped with Hobart-built motors and are available for single-phase electrical service. They feature the exclusive Hobart Stay-Sharp cast solid stainless steel knife and are furnished with a cord and plug as standard equipment.

The 1712 and 1712R Slicers feature two-speed automatic slicing and an adjustable carriage fence which can be adjusted to prevent products from rolling on the carriage. The feed grip and indexing screw on the 1712R make this model ideal for producing thin uniform slices of roast beef, boneless ham, etc.

Accessories available for all slicers include additional carriage fences and a tubular food chute, which can be used in place of the carriage tray to slice round items such as lettuce or pepperoni.

INSTALLATION

UNPACKING

Immediately after unpacking the slicer, check it for possible shipping damage. If this machine is found to be damaged after unpacking, save the packing material and contact the carrier within 15 days of delivery.

Prior to installing the slicer, test the electrical service to assure it agrees with the specifications on the machine data plate.

ASSEMBLY

Model 1612

After removing the slicer from its shipping base, loosen the thumb screw on the knife sharpener, place it in its storage slot (Fig. 1), and tighten the thumb screw.

The oil shipped in the container marked *HAVOLINE #10* and the can of *Chevron Poly - FM #0* grease are for machine lubrication; refer to the MAINTENANCE section of this manual for instructions on their use.

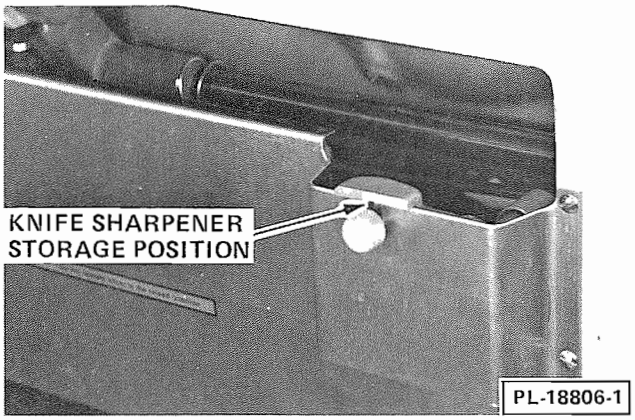

Fig. 1

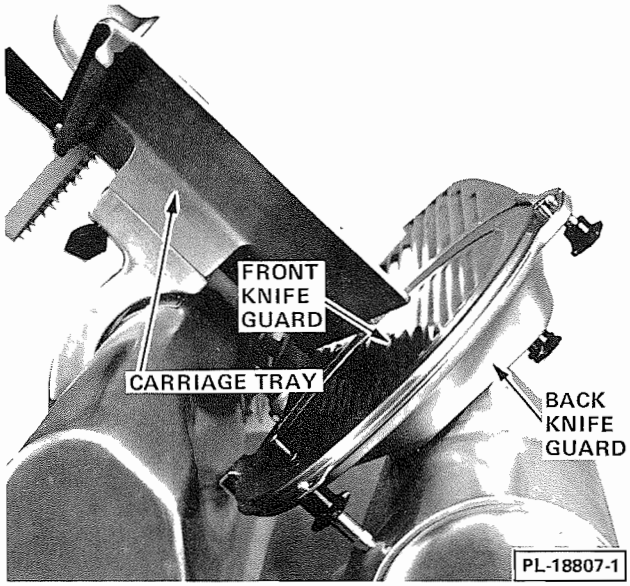

Fig. 2

Models 1712 and 1712R

Remove the carriage tray from its shipping box, place it in position on the slicer (Fig. 2), and secure it by tightening the thumb screw.

Loosen the thumb screw on the knife sharpener, place it in the storage slot (Fig. 1), and tighten the thumb screw.

The oil shipped in the container marked *HAVOLINE #10* and the can of *Chevron Poly - FM #0* grease are for machine lubrication; refer to the MAINTENANCE section of this manual for instructions on their use.

ELECTRICAL

WARNING: THIS MACHINE IS PROVIDED WITH A THREE-PRONG GROUNDING PLUG. IT IS IMPERATIVE THAT THE OUTLET TO WHICH THIS PLUG IS CONNECTED BE PROPERLY GROUNDED. IF THE RECEPTACLE IS NOT THE PROPER GROUNDING TYPE, CONTACT AN ELECTRICIAN.

CLEANING

This machine must be thoroughly cleaned and sanitized after installation and before being used. Refer to the OPERATION section of this manual.

OPERATION

SAFETY

SAFETY DEVICES INCORPORATED IN THIS SLICER MUST BE IN THEIR CORRECT OPERATING POSITIONS ANYTIME THE SLICER IS IN USE.

The FRONT and BACK KNIFE GUARDS (Fig. 2) must be in position on their locating studs and secured with the thumb screws.

The MEAT GRIP must be used when slicing short ends to keep your hands away from the knife.

When the slicer is not running, the INDEX KNOB (Fig. 3) must be turned back below zero (fully clockwise). The gauge plate will then prevent the knife edge from being exposed.

Always UNPLUG the power cord before cleaning or moving the slicer.

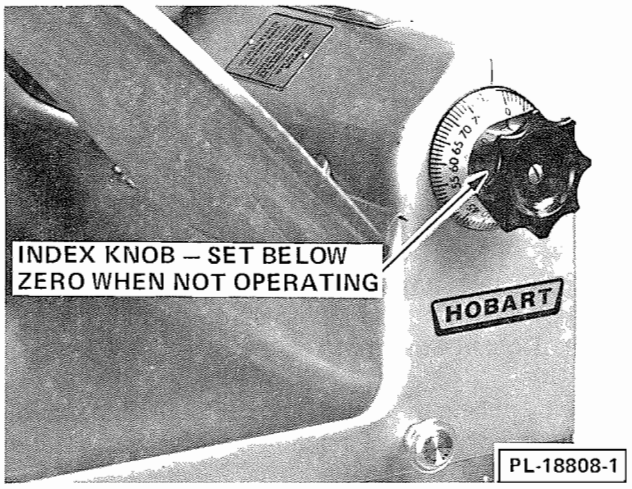

Fig. 3

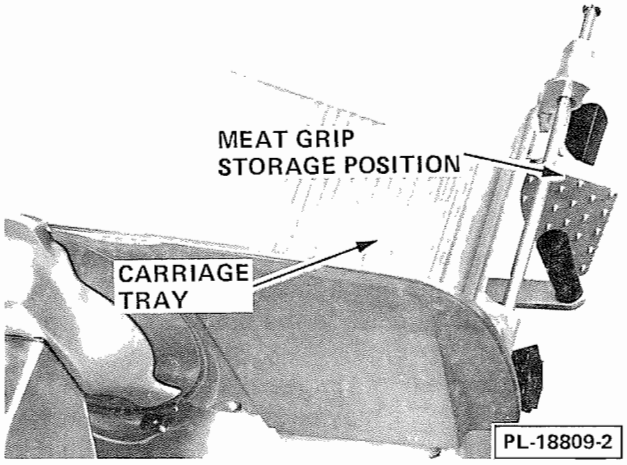

Fig. 4

SLICING — MODEL 1612

Pull the carriage all the way toward you until it reaches its stop. With the meat grip out of the way, place the product to be sliced on the carriage tray (Fig. 4).

Set the meat grip against the product and turn on the slicer by pulling the switch knob (Fig. 5). If the meat grip is not needed, it may be stored out of the way by sliding it to the top of its travel, rotating it under the carriage tray, and allowing it to rest in the retaining clip (Fig. 4).

Adjust the gauge plate to obtain the desired slice thickness by turning the index knob (Fig. 5). The numbers on the index knob do not indicate actual measurements but may be used for reference to duplicate slice thicknesses.

Using the carriage tray handle or the meat grip handle (Fig. 5), push the carriage back and forth to slice.

To use the optional food chute, loosen the carriage tray thumb screw (Fig. 5) and carefully remove the carriage tray. Position the food chute on the carriage support and secure it by tightening the thumb screw. The pusher plate is provided with the food chute to force-feed products when necessary.

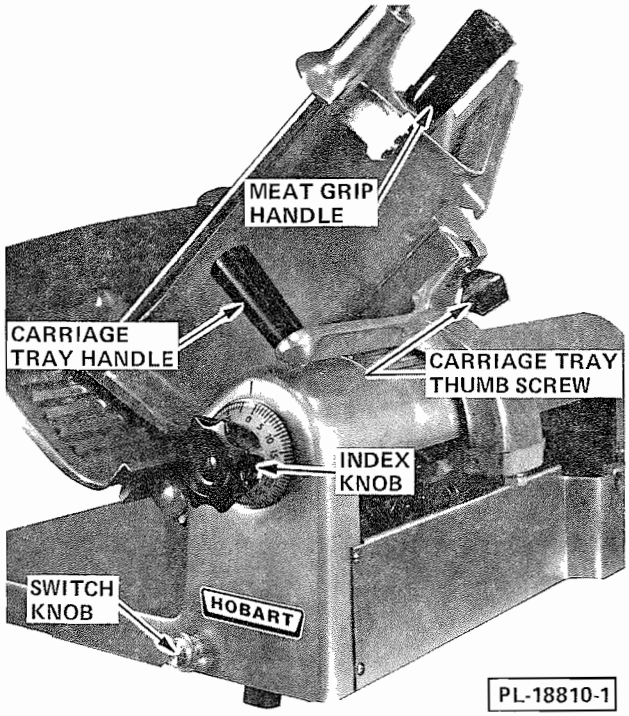

Fig. 5

SLICING — MODEL 1712

Pull the carriage all the way toward you until it reaches its stop. With the meat grip out of the way, place the product to be sliced on the carriage tray (Fig. 6). Adjust the fence (Fig. 6) by loosening the thumb screw and sliding the fence so that it is close to the product but not pushing against it. Tighten the thumb screw.

Set the meat grip (Fig. 7) against the product and turn on the slicer by pulling the switch knob (Fig. 6). If the meat grip is not needed, it may be stored out of the way by sliding it to the top of its travel, rotating it under the carriage tray, and allowing it to rest in the retaining clip (Fig. 6).

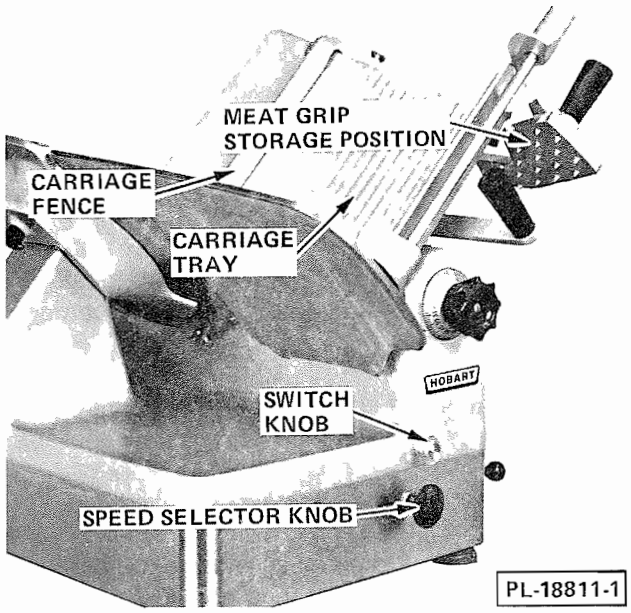

Fig. 6

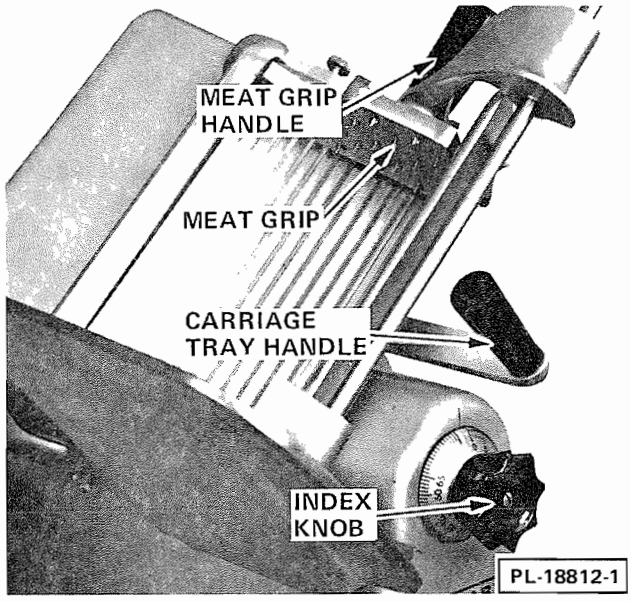

Fig. 7

Adjust the gauge plate to obtain the desired slice thickness by turning the index knob (Fig. 7). The numbers on the index knob do not indicate actual measurements but may be used for reference to duplicate slice thicknesses.

Using the carriage tray handle or meat grip handle (Fig. 7), push the carriage back and forth to slice.

To operate the slicer automatically, make sure the speed selector knob (Fig. 6) is set in, pull the carriage to the end of its travel, lift the actuating lever (Fig. 8) to its locked position, and gently push the carriage to engage the driving unit. Always start automatic slicing in low speed.

To change to high speed, pull the speed selector knob out (when the carriage is at the operator end of its travel) and rest the notch in the speed selector on the shifter sleeve. Release the speed selector to shift back to low speed.

To disengage the driving unit, push the locking clip (Fig. 8) when the carriage is nearing the operator end of its travel. Always leave the driving unit in low speed (knob set in) when the slicer is not operating automatically.

To use the optional food chute, loosen the carriage tray thumb screw (Fig. 8) and carefully remove the carriage tray. Position the food chute on the carriage support and secure it by tightening the thumb screw. The pusher plate is provided with the food chute to force-feed products when necessary.

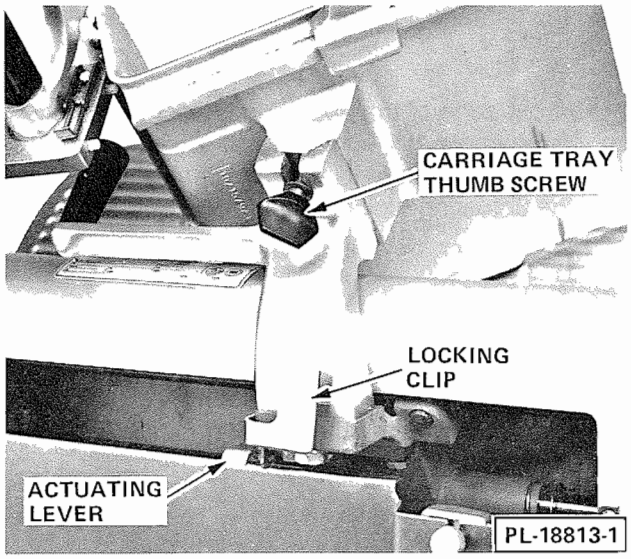

Fig. 8

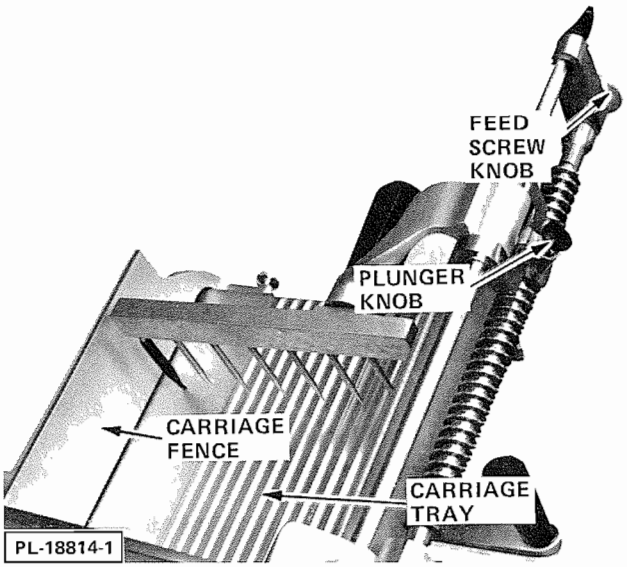

Fig. 9

SLICING — MODEL 1712R

Pull out and rotate the plunger knob (Fig. 9) so that the pin rests on the plunger housing. Lift the meat grip to its raised position and place the product on the carriage tray (Fig. 9).

Adjust the fence (Fig. 9) by loosening the thumb screw and sliding the fence so that it is close to the product but not pushing against it. Tighten the thumb screw. Swing the meat grip around and firmly force the prongs into the product. The prongs should be set in the middle of the product and readjusted occasionally to maintain an even pressure during automatic slicing. Always turn off the slicer before resetting the meat grip. If desired, the meat grip can be set at the end of the product to serve as a pusher.

Adjust the gauge plate to obtain the desired slice thickness by turning the index knob (Fig. 10). The numbers on the index knob do not indicate actual measurements but may be used for reference to duplicate slice thicknesses.

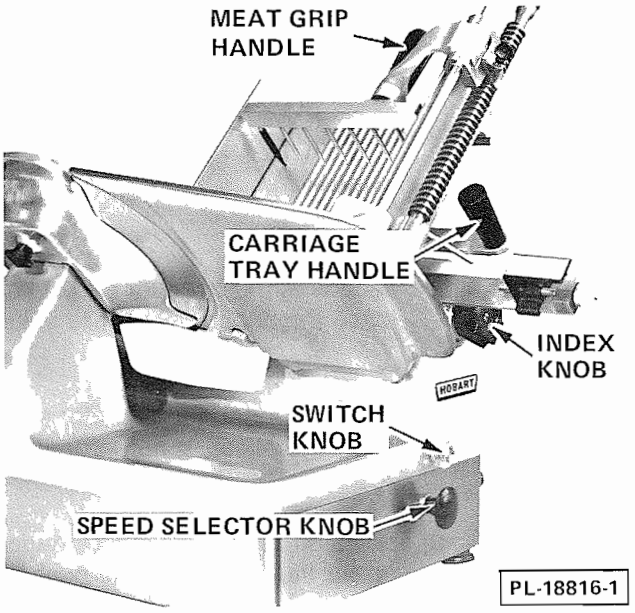

Fig. 10

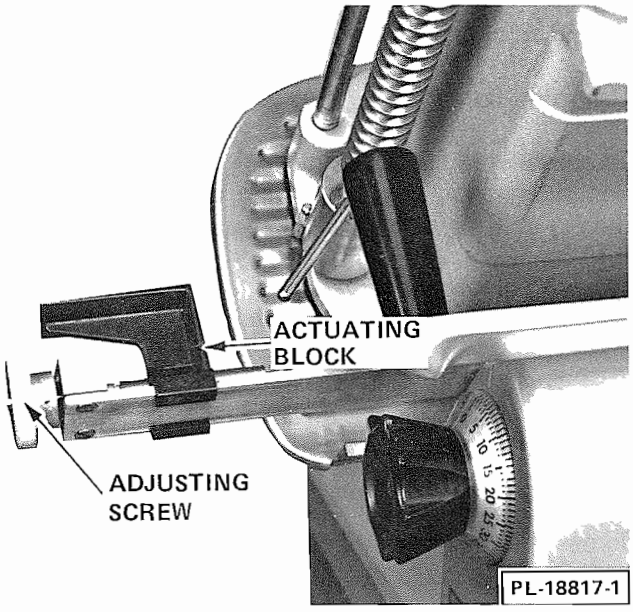

Fig. 11

For manual slicing, push the carriage back and forth using either the carriage tray handle or the meat grip handle (Fig. 10).

For automatic slicing, turn the adjusting screw (Fig. 11) until the front edge of the actuating block (Fig. 11) is at the setting (1, 2, 3, or 4) which matches that of the index knob. For example, if the index knob is set on 2, align the actuating block with the number 2 groove on the slide bar. This matches the feed speed with slice thickness. If the texture of the product causes inconsistent slices, advance the actuating block beyond the initial setting to increase feed pressure.

Turn the plunger knob (Fig. 9) to engage the meat grip with the feed screw. The product should be snugged against the gauge plate by turning the feed screw knob (Fig. 9).

Pull the carriage to the end of its travel and engage the driving unit by lifting the actuating lever (Fig. 12) to its locked position. Make sure the speed selector knob (Fig. 10) is set in, pull the switch knob (Fig. 10), and gently push the carriage to begin automatic slicing.

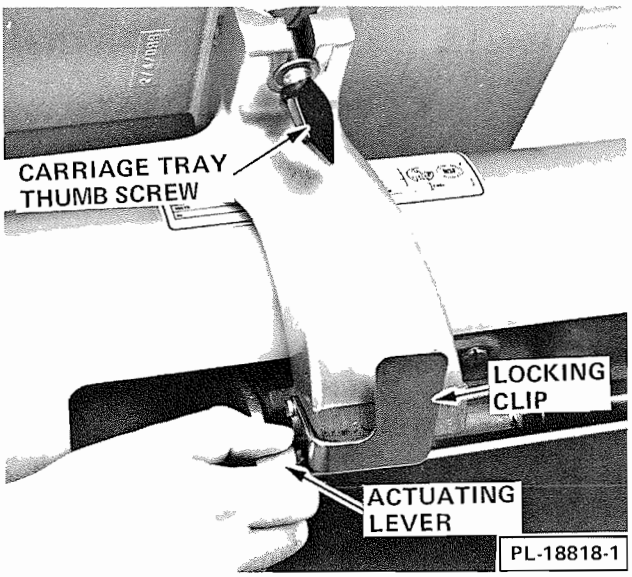

Fig. 12

To change to high speed, pull the speed selector knob out (when the carriage is at the operator end of its travel) and rest the notch in the speed selector on the shifter sleeve. Release the speed selector to shift back to low speed.

To disengage the driving unit, push the locking clip (Fig. 12) when the carriage is nearing the operator end of its travel. Always leave the driving unit in low speed (knob pushed in) when the slicer is not operating automatically.

To use the optional food chute, loosen the carriage tray thumb screw (Fig. 12) and carefully remove the carriage tray. Position the food chute on the carriage support and secure it by tightening the thumb screw. The pusher plate is provided with the food chute to force-feed products when necessary.

CLEANING

This machine MUST be thoroughly cleaned and sanitized after each day's operation or anytime it is not to be used for an extended period of time.

WARNING: UNPLUG MACHINE POWER CORD AND TURN THE INDEX KNOB FULLY CLOCKWISE BEFORE CLEANING THE SLICER.

Using a mild soap (such as *Spic and Span*) and hot water solution and a clean cloth, wipe all surfaces of the machine, and then rinse it using another clean cloth and fresh water.

To clean under the 1712 or 1712R, raise the lift lever past center to its stop (Fig. 13). Set the machine back down after cleaning by slowly retracting the lift lever. The Model 1612 has a cleaning leg, which is underneath the machine. To clean under the 1612, raise the index knob end of the machine and support it with the cleaning leg.

Remove the front knife guard by loosening its two retaining knobs (Fig. 14) and rotating it clockwise to clear the slots of the retaining studs. With the front guard removed, loosen the back guard retaining knob (Fig. 14) and slide it off of the slicer.

WARNING: THE SLICER KNIFE IS VERY SHARP. EXERCISE EXTREME CAUTION WHEN WORKING NEAR THE KNIFE.

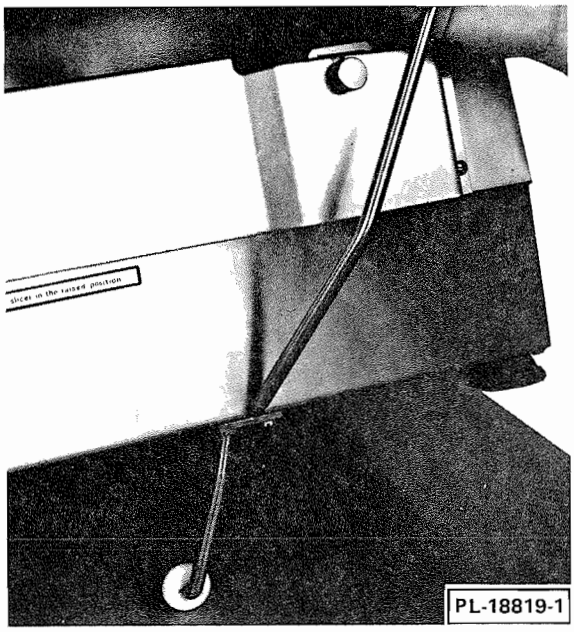

Fig. 13

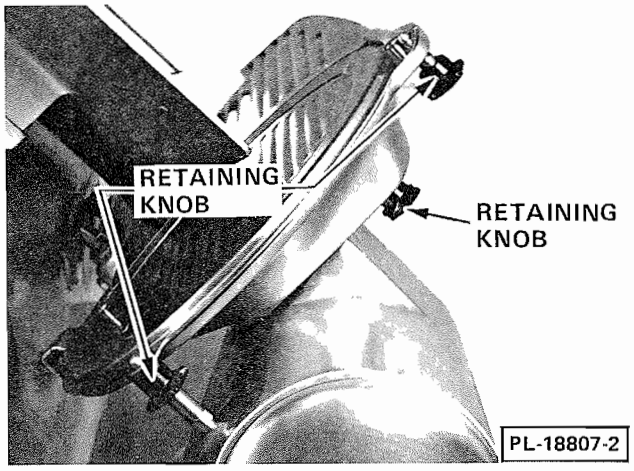

Fig. 14

Wash and rinse both sides of each knife guard.

CAREFULLY wash and rinse both sides of the knife by wiping outward from the center. Never use steel pads to clean the knife.

Carefully reassemble the back and front knife guards. The back knife guard must be assembled first.

DO NOT wash any slicer components in a dishwasher.

MAINTENANCE

KNIFE SHARPENING

The Hobart cast stainless steel knife will provide long service in normal food store or commercial kitchen use. However, in high volume applications where it is a practice to sharpen the knife frequently or even daily, the knife will be expended in a shorter time.

WARNING: UNPLUG MACHINE POWER CORD.

Set the index knob on zero.

With knife guards in place, thoroughly wash the area around the knife, exposed knife surfaces (front and back), and the knife edge.

Loosen the carriage tray thumb screw and remove the carriage.

Set the index knob on 50.

Remove the sharpener from its storage slot and loosen its thumb screw until it slips into the slot on the gauge plate (Fig. 15). Tighten the thumb screw to hold the sharpener in place.

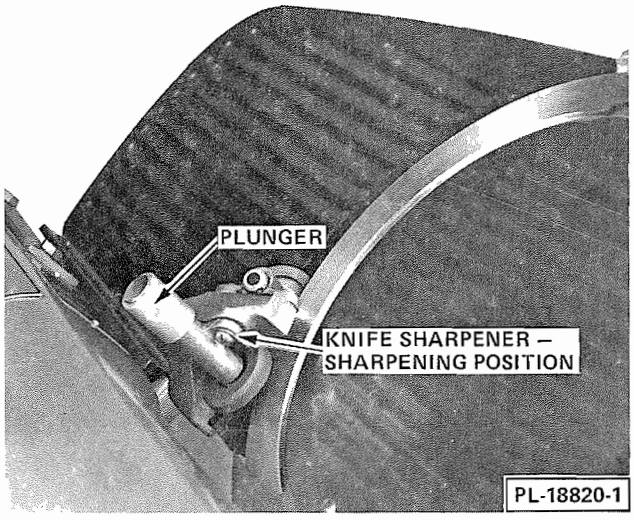

Fig. 15

Plug in the power cord and pull the switch knob to start the slicer. Slowly turn the index knob clockwise to grind the beveled (back) edge of the knife. Grind only until a burr appears on the front edge of the knife.

Turn the slicer off and inspect for a burr on the front edge of the knife. Repeat grinding as necessary until the knife edge is burred.

When a burr appears, start the slicer and depress the plunger (Fig. 15) for three seconds to engage the truing wheel. After three seconds, SIMULTANEOUSLY release the plunger and turn the index knob counterclockwise.

Turn the slicer off, **UNPLUG MACHINE POWER CORD**, remove the sharpener, and turn the index knob fully clockwise. Replace the sharpener in its storage position.

Wipe the slicer with a clean damp cloth to remove any grinding particles and replace the carriage.

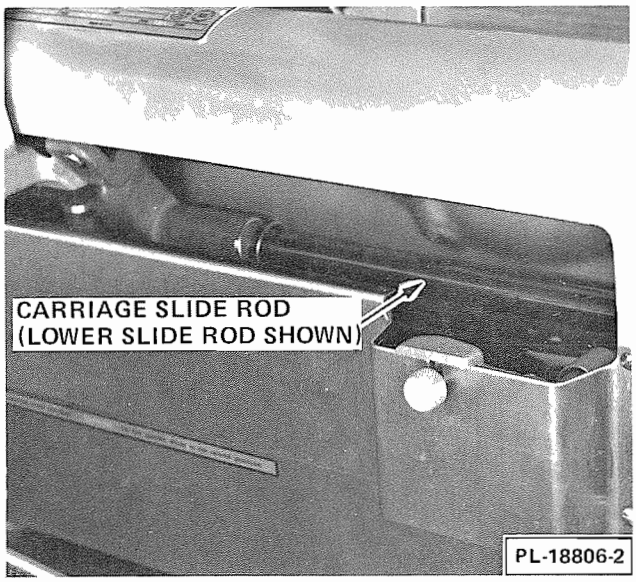

Fig. 16

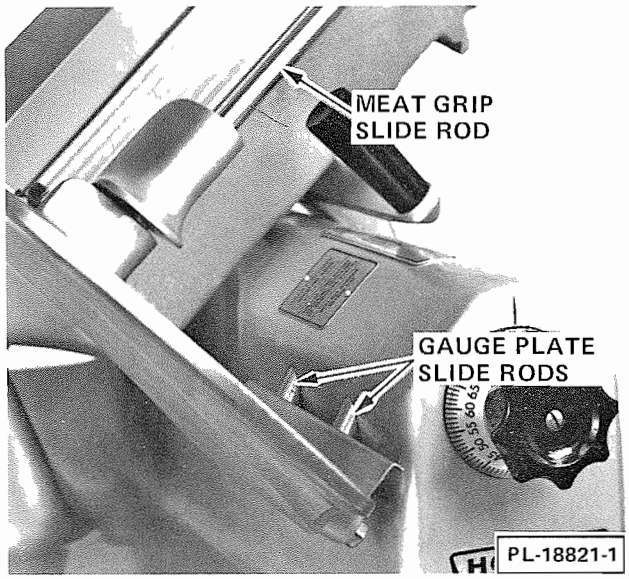

Fig. 17

LUBRICATION

The upper and lower carriage slide rods (Fig. 16) should be lubricated weekly with several drops of *Texaco Havoline #10* oil (or equivalent). A two-ounce container of this oil was supplied with the slicer; additional quantities are available from your local Hobart Service Office. DO NOT use vegetable oil.

Occasionally, the gauge plate slide rods (Fig. 17) should be lightly coated with *Chevron Poly - FM #0* (2 oz. container supplied) or an equivalent tasteless lubricant. Turn the index knob fully counterclockwise when lubricating these slide rods, and then turn it fully clockwise when finished. Additional quantities of this lubricant are available from your local Hobart Service Office.

DO NOT lubricate the meat grip slide rod (Fig. 17). It must be kept clean but not lubricated.

The motor has sealed bearings and requires no lubrication maintenance.

WEAR ADJUSTMENT

After several years of operation and many sharpenings of the knife, it may become necessary to have the gauge plate adjusted closer to the knife. Contact your local Hobart Service Office if this service becomes necessary as it must be done by an authorized Hobart Service Technician.

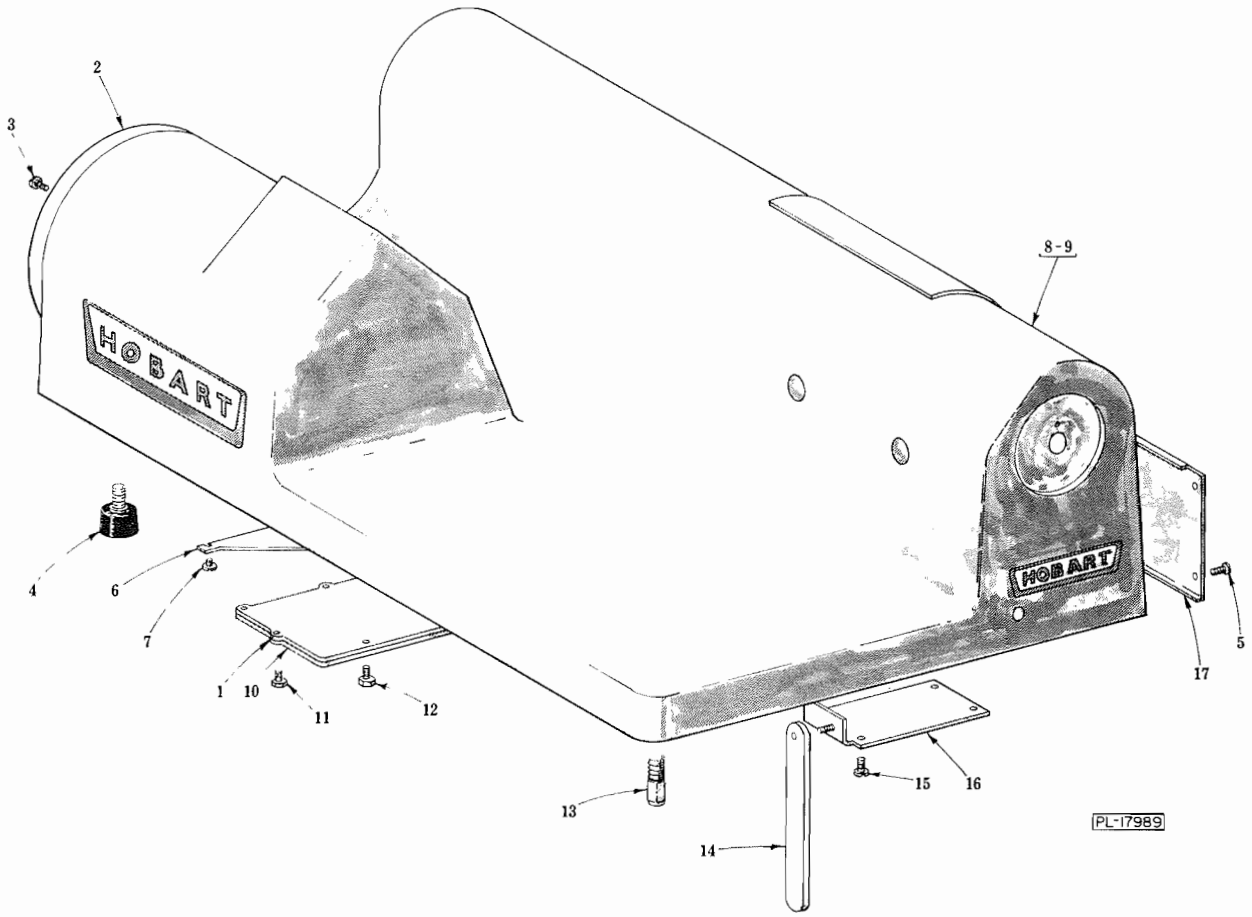

1612 BASE UNIT

ILLUS. PL-17989	PART NO.	NAME OF PART	AMT.
1	C-117710	Gasket - Gear Case Cover	1
2	P-70238	Cover - Bearing Bracket	1
3	SD-24-19	Self-Tapping Screw - #8-32 x 3/8" Truss Hd. "Taptite"	2
4	B-18682-1	Foot	3
5	SC-10-32	Mach. Screw - #8-32 x 3/8" Truss Hd	4
6	B-123452	Cover - Junction Box	1
7	SD-24-13	Self-Tapping Screw - #8-32 x 3/8" Pan Hd. "Taptite"	3
8	C-123800-5	Base & Name Plate Assy. (60 Hz.)	1
9	C-123800-6	Base & Name Plate Assy. (50 Hz.)	1
10	C-116670	Cover - Gear Case	1
11	SD-24-4	Self-Tapping Screw - #10-24 x 5/8" Hex Hd. "Taptite"	5
12	SD-24-5	Self-Tapping Screw - 5/16"-18 x 5/8" Hex Hd. "Taptite"	2
13	M-70412	Foot - Helper	1
14	A-103972	Leg - Cleaning	1
15	SD-24-13	Self-Tapping Screw - #8-32 x 3/8" Pan Hd. "Taptite"	4
16	B-114124	Switch Box Cover & Leg Assy. (Incls. item #14)	1
17	S-84067	Panel - Side	1

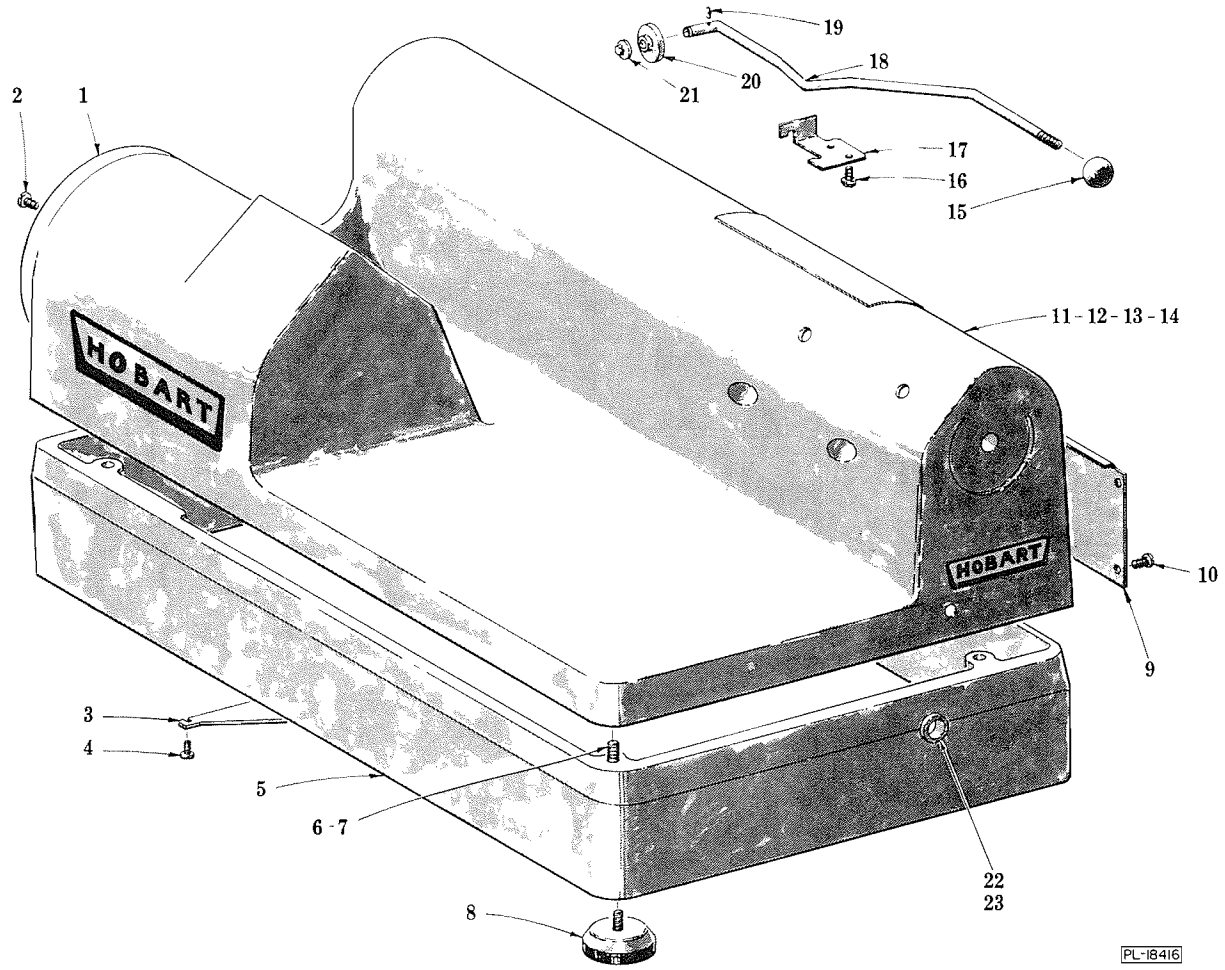

1712/1712R BASE UNIT

ILLUS. PL-18416	PART NO.	NAME OF PART	AMT.
1	P-70238	Cover - Bearing Bracket	1
2	SD-24-19	Self-Tapping Screw - #8-32 x 3/8" Truss Hd., Type TT	2
3	B-123452	Cover - Junction Box	1
4	SD-24-13	Self-Tapping Screw - #8-32 x 3/8" Pan Hd., Type TT	3
5	A-290038-1	Sub-Base & Bushing Assy. (Incls. items #6, 22 & 23)	1
6	SC-37-75	Cap Screw - 5/16"-18 x 3/4" Hex Hd	4
7	WL-3-44	Lock Washer - 5/16" Medium	4
8	M-83681	Foot	4
9	S-84067	Panel - Side	1
10	SC-10-32	Mach. Screw - #8-32 x 3/8" Truss Hd	4
11	C-123800-5	Base & Name Plate Assy. (60 Hz.) (1712)	1
12	C-123802-5	Base & Name Plate Assy. (60 Hz.) (1712R)	1
13	C-123800-6	Base & Name Plate Assy. (50 Hz.) (1712)	1
14	C-123802-6	Base & Name Plate Assy. (50 Hz.) (1712R)	1
15	A-106503	Knob - Lifting Lever	1
16	SD-24-15	Self-Tapping Screw - 1/4"-20 x 3/4" Hex Washer Hd., Type TT	2
17	C-121920	Retainer - Lifting Lever	1
18	D-106504	Lever - Lifting	1
19	RP-3-19	Rollpin - 1/16" Dia. x 5/8" Lg	1
20	A-108001	Foot - Lifting Lever	1
21	A-106502	Push Nut	1
22	B-290063	Bushing - Shifter Sleeve	1
23	RR-10-13	Retaining Ring	1
	A-106505	Lever & Foot Assy. (Incls. items #15, 18, 19, 20 & 21)	1

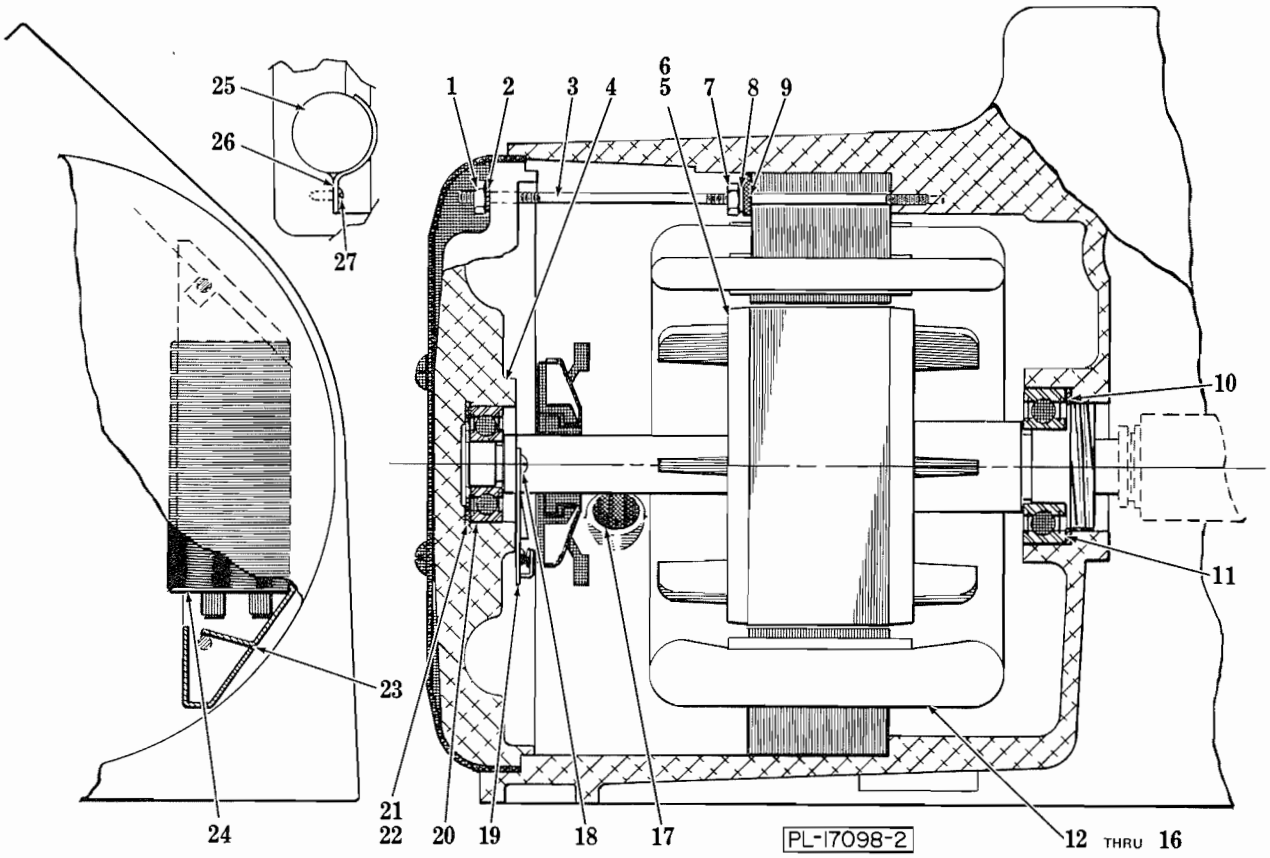

MOTOR PARTS

ILLUS. PL-17098-2	PART NO.	NAME OF PART	AMT.
1	NS-9-12	Mach. Nut - #8-32 Hex	4
2	WL-7-6	Lock Washer - #8 Ext. Shakeproof	4
3	B-120048	Stud - Stator	4
4	E-110293	Bracket - Bearing	1
5	C-22275-251	Rotor Assy. (60 Hz.)	1
6	C-22275-250	Rotor Assy. (50 Hz.)	1
7	NS-9-12	Mach. Nut - #8-32 Hex	4
8	WS-2-15	Washer	4
9	B-113655	Retainer - Stator	4
10	M-70422	Washer - Bearing	1
11	BB-15-41	Ball Bearing - N.D. #Z993L04	1
12	D-65477-150-1	Stator Assy. (115 V., 60 Hz.)	1
13	D-65477-150-2	Stator Assy. (200 V., 60 Hz.)	1
14	D-65477-150-3	Stator Assy. (230 V., 60 Hz.)	1
15	D-65477-150-4	Stator Assy. (115 V., 50 Hz.)	1
16	D-65477-150-5	Stator Assy. (220/240 V., 50 Hz.)	1
17	M-70418	Bushing - Motor Leads	1
18	SD-9-5	Self-Tapping Screw - #6-32 x 5/16" Phil. Rd. Hd., Type F	2
19	C-111688-5	Switch - Starting (Stationary Part)	1
20	BB-18-12	Ball - Bearing - Fafnir #P201KDD	1
21	V-21046-2	Washer (1/32" Thk.)	1
22	SL-2-2	Loading Spring - N.D. #S-12	1
23	D-278280	Retainer - Capacitor	1
24	D-70487-15	Capacitor (50/60 Hz.)	1
*25	----	Capacitor Assy	1
26	B-118072	Clamp - Capacitor	2
27	SD-9-5	Self-Tapping Screw - #6-32 x 5/16" Phil. Rd. Hd., Type F	2

*Item #25 discontinued, to replace ORDER item #24 and Kit #A-294016.

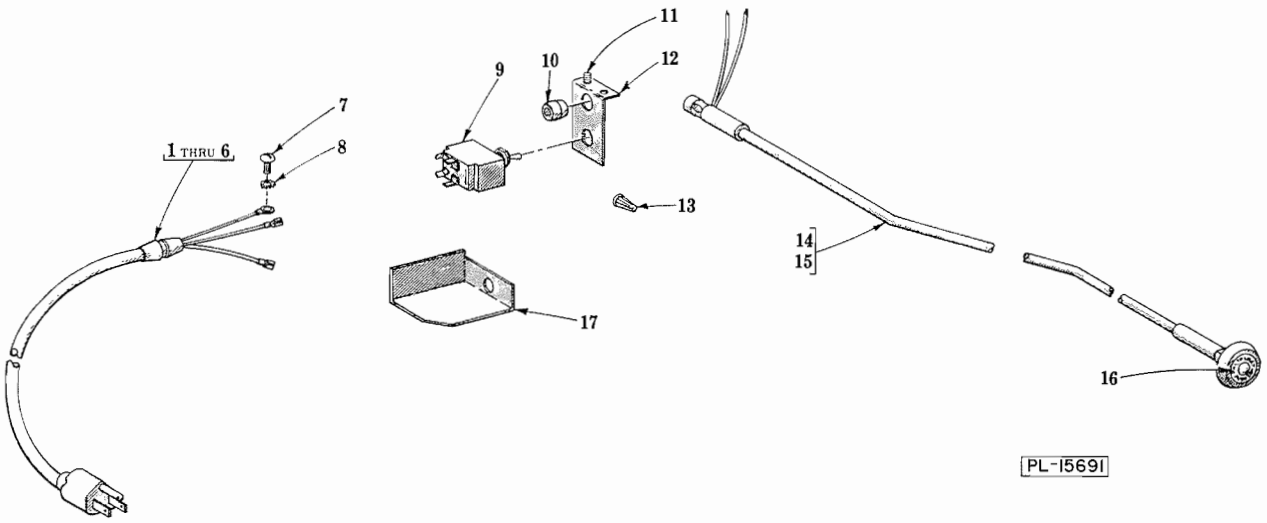

ELECTRICAL UNIT

ILLUS. PL-15691	PART NO.	NAME OF PART	AMT.
1	B-117542-37	Cord & Plug Assy. (115 V.)	1
2	B-117542-38	Cord & Plug Assy. (200-240 V.)	1
3	B-117542-39	Cord Assy. (I.E.C.)	1
4	RR-8-13	Retaining Ring (Use with items #1 & 2)	1
5	WS-5-36	Washer (Use with item #3)	2
6	FE-6-32	Strain Relief (Use with item #3)	2
7	SC-27-29	Mach. Screw - #8-32 x 3/8" Rd. Hd	1
8	WL-10-1	Lock Washer - #8 Ext. Shakeproof	1
9	B-87711-148-1	Switch (With Nuts)	1
10	FE-21-9	Strain Relief	1
11	SD-24-13	Self-Tapping Screw - #8-32 x 3/8" Pan Hd. "Taptite"	2
12	B-122341	Bracket - Switch	1
13	FE-6-29	Nut - Wire	2
14	C-122342-5	Lighted Knob Assy. (115 V.)	1
15	C-122342-6	Lighted Knob Assy. (200/240 V.)	1
16	B-76902	Disc - Insert	1
17	B-123647	Insulator - Switch	1

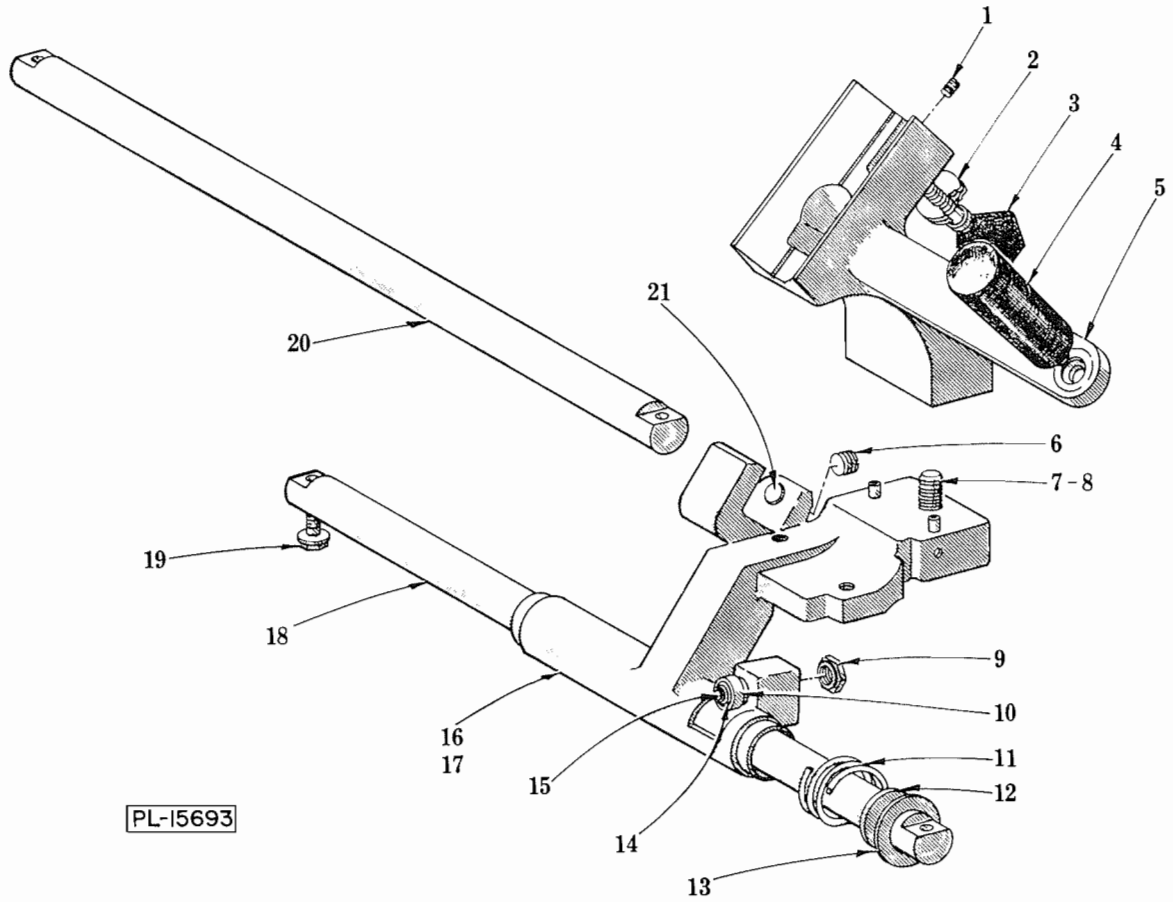

SLIDE ROD UNIT

ILLUS. PL-15693	PART NO.	NAME OF PART	AMT.
1	SC-64-15	Set Screw - 1/4-20 x 1/2" Hdls., Oval Pt. "Nylok"	1
2	A-107364	Washer - Belleville	2
3	C-108197-5	Thumb Screw	1
4	P-70194	Handle - Carriage Tray	1
5	R-88749-2	Carriage Support & Plug Assy. (Incls. items #1 & 4)	1
6	M-86260	Adjusting Screw - "Nylok"	1
7	SC-37-21	Cap Screw - 1/2"-13 x 1-1/2" Hex Hd	1
8	WL-6-35	Lock Washer - 1/2" Light	1
9	V-10928-2	Nut	1
10	BB-4-11	Ball Bearing - Hoover #626ZZ	1
11	B-20622	Spring - Bumper	2
12	V-21046-1	Washer - Bumper (Rubber)	2
13	B-118162	Washer - Backup (SST)	2
14	RR-9-15	Retaining Ring	1
15	B-109870	Stud - Eccentric	1
16	R-114022	Carriage Bearing Assy. (Incls. items #6 & 17)	1
17	M-88921	Bushing	2
18	C-123686-1	Slide Rod - Lower	1
19	SD-24-48	Self-Tapping Screw - 5/16"-18 Hex Washer Hd. "Taptite"	4
20	C-123686-2	Slide Rod - Upper	1
21	M-83416	Plug	2
	M-86262	Eccentric Stud, Brg. & Nut Assy. (Incls. items #9, 10, 14 & 15)	1

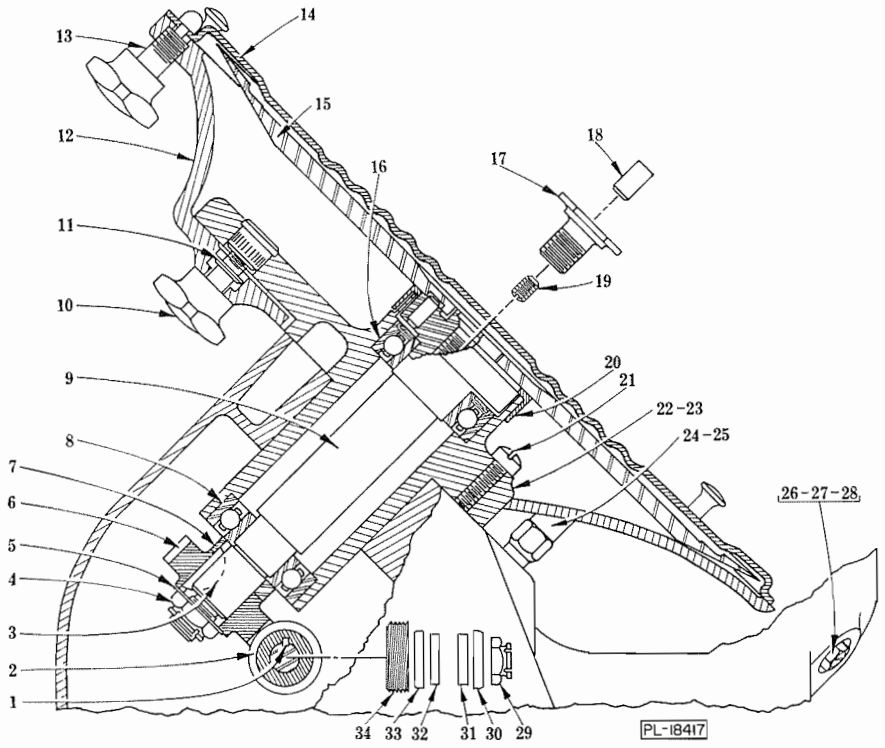

KNIFE UNIT

ILLUS. PL-18417	PART NO.	NAME OF PART	AMT.
1	R-12430-3	Key	1
2	C-291221	Worm (5T)	1
3	M-73348	Key - Special Woodruff	1
4	NS-32-29	Stop Nut - 1/2"-20 "Flexloc"	1
5	WS-8-9	Washer	1
6	M-70302	Gear - Knife Shaft Worm (24T)	1
7	V-104001	Washer - Thrust	1
8	BB-18-43	Ball Bearing - Hoover #9204	1
9	P-70435	Knife Shaft & Dowel Sub-Assy	1
10	P-118484	Screw - Back Knife Guard Retaining	1
11	RR-10-18	Retaining Ring	1
12	S-82952-2	Back - Knife Guard	1
13	P-70196	Stud - Upper Knife Guard	1
14	R-83023	Knife Guard & Knob Assy	1
15	D-275913-1	Knife (Service)	1
16	BB-16-22	Ball Bearing - Fafnir #205KL	1
17	M-73355	Screw - Knife	1
18	M-73265	Plug - Plate Thrust	1
19	SC-64-4	Set Screw - 1/4"-28 x 3/8" Hdls., Flat Pt. "Nylok"	1
20	B-111154	Ring - Knife Shaft	1
21	SD-33-11	Self-Tapping Screw -1/4"-20 x 1-3/8" Fil. Hd. "Taptite"	4
22	P-88726	Knife Shaft Hub & Insert Assy	1
23	P-70348	Knife Shaft & Hub Assy. (Incls. items #3, 4, 5, 6, 7, 8, 9, 16, 20 & 22)	1
24	M-70241	Stud - Center Knife Guard	1
25	P-70198	Lock Nut - Center Stud	1
26	M-83021	Stud - Lower Retaining Clip	1
27	WL-7-15	Lock Washer - 1/4" Ext. Shakeproof	1
28	NS-17-1	Jam Nut - 1/4"-20 Hex Fin	1
29	NS-32-23	Stop Nut - 7/16"-20 "Flexloc"	1
30	WS-7-50	Washer	1
31	V-17778-3	Washer - Shock (29/64" I.D.)	1
32	V-17778-2	Washer - Shock (41/64" I.D.)	1
33	V-17777-2	Retainer - Shock Washer (41/64" I.D.)	1
34	P-70239	Conveyor - Oil	1
	M-73356	Knife Screw Assy. (Incls. items #17, 18 & 19)	1
	B-113716	Center Stud & Nut Assy. (Incls. items #24 & 25)	1

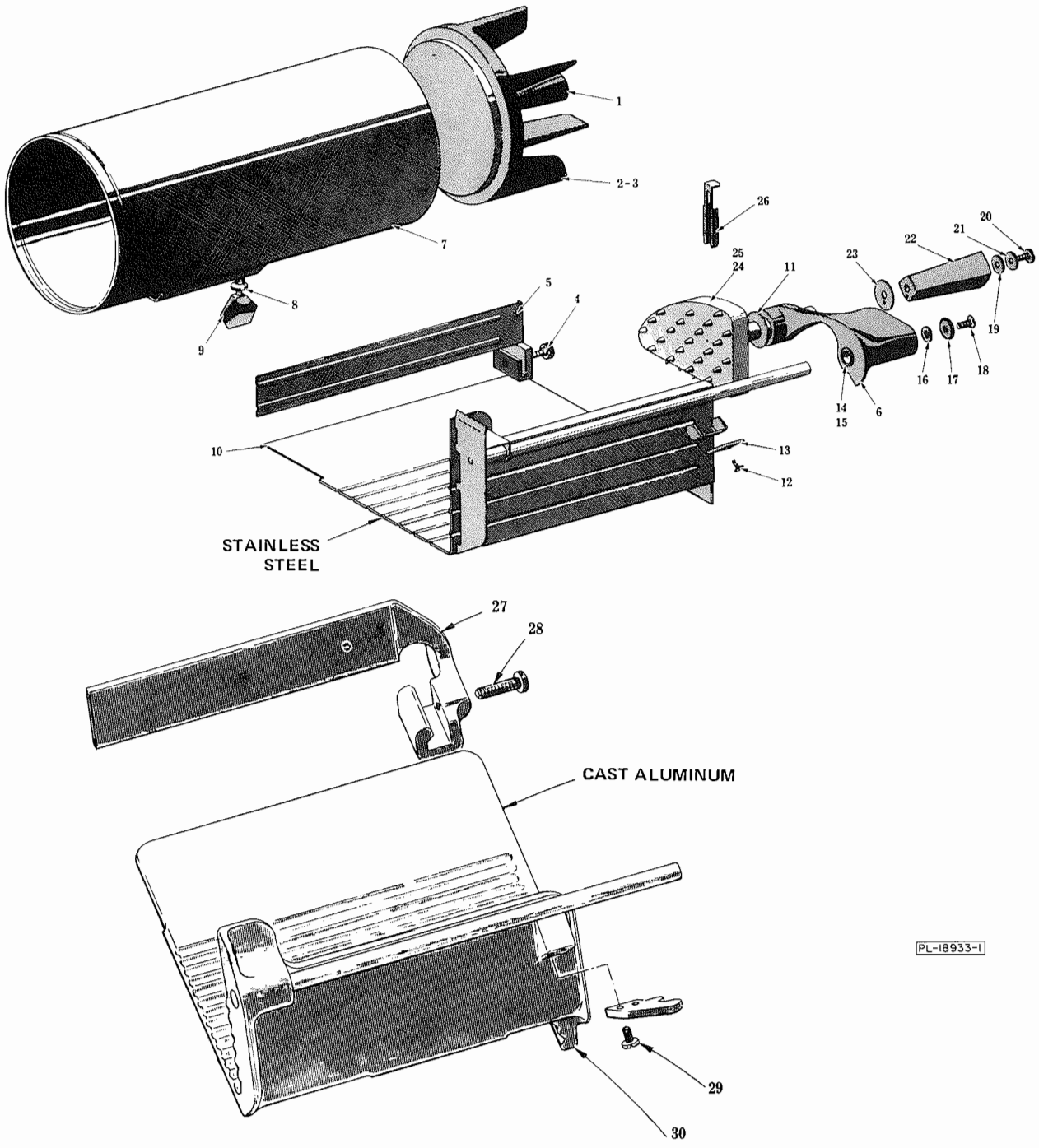

1612 CARRIAGE TRAY UNIT

1612 CARRIAGE UNIT

ILLUS. PL-18933-1	PART NO.	NAME OF PART	AMT.
*1	P-70194	Handle - Carrige Unit	1
*2	R-75930	Plate - Pusher	1
*3	M-75945	Pusher Plate & Handle Assy. (Incls. items #1 & 2)	1
4	B-290984	Thumb Screw - Fence	1
5	D-291005-2	Fence & Thumb Screw Assy. (Incls. item #4) (SST)	1
6	M-75138-2	Meat Grip Arm & Bearing Assy. (Incls. item #14)	1
*7	D-118332-1	Tube & Angled Seat Assy	1
*8	A-107364	Washer - Belleville	2
*9	C-108197-13	Thumb Screw	1
10	E-290972-1	Carriage Tray Assy. (SST)	1
11	M-70386	Washer	1
12	SD-15-4	Self-Tapping Screw - #10-24 x 1/2" Pan Hd. "Taptite"	2
13	M-72579	Clip - Meat Grip Retaining	1
14	M-75135	Bearing - Meat Grip Arm	2
15	WS-21-19	Washer	AR
16	WL-6-16	Lock Washer - 1/4" Light	1
17	M-70305	Washer - Meat Grip Retaining	1
18	SC-16-5	Mach. Screw - 1/4"-20 x 5/8" Oval Hd	1
19	M-70344	Washer - Handle Tension	1
20	M-68042	Screw - "Nylok" Truss Hd	1
21	M-70345	Washer - Handle Retaining	1
22	P-70202	Handle - Meat Grip	1
23	M-70387	Washer - Handle	1
24	D-120906	Meat Grip Assy. (Standard)	1
25	R-77534	Meat Grip Assy. (Optional Metal) (Not Shown)	1
26	P-70341	Meat Holder - Meat Grip	2
27	B-113914-3	Fence & Insert Assy. (Cast Alum.) (Use with item #30)	1
28	M-70448	Thumb Screw - Fence (Cast Alum.) (Use with item #30)	1
29	M-68042	Screw - "Nylok" Truss Hd	2
30	M-72758	Carriage Tray & Slide Rod Assy. (Cast Alum.)	1
	*ML-31329-Z	Food Chute Attachment Assy. (Incls. items #3, 7, 8 & 9)	1
	E-290976-1	Carriage Tray Assy. (Standard) (Incls. items #6, 8, 9, 10 thru 23 & 24) (SST)	1
	E-290976-2	Carriage Tray Assy. (Optional) (Incls. items #6, 8, 9, 10 thru 23, 25 & 26) (SST)	1
	D-72615-4	Carriage Tray, Meat Grip & Arm Assy. (Standard) (Incls. items #6, 11, 13, 16 thru 24, 29, 30 & #2 & 3 on page 16) (Cast Alum.)	1
	D-72615-6	Carriage Tray, Meat Grip & Arm Assy. (Optional Metal) (Incls. items #6, 11, 13, 16 thru 23, 25, 29, 30 & #2 & 3 on page 16) (Cast Alum.)	1
	B-111038-3	Fence & Thumb Screw Assy. (Incls. items #27 & 28) (Cast Alum.)	1

*Attachment Chute (Special, used in place of Carriage).

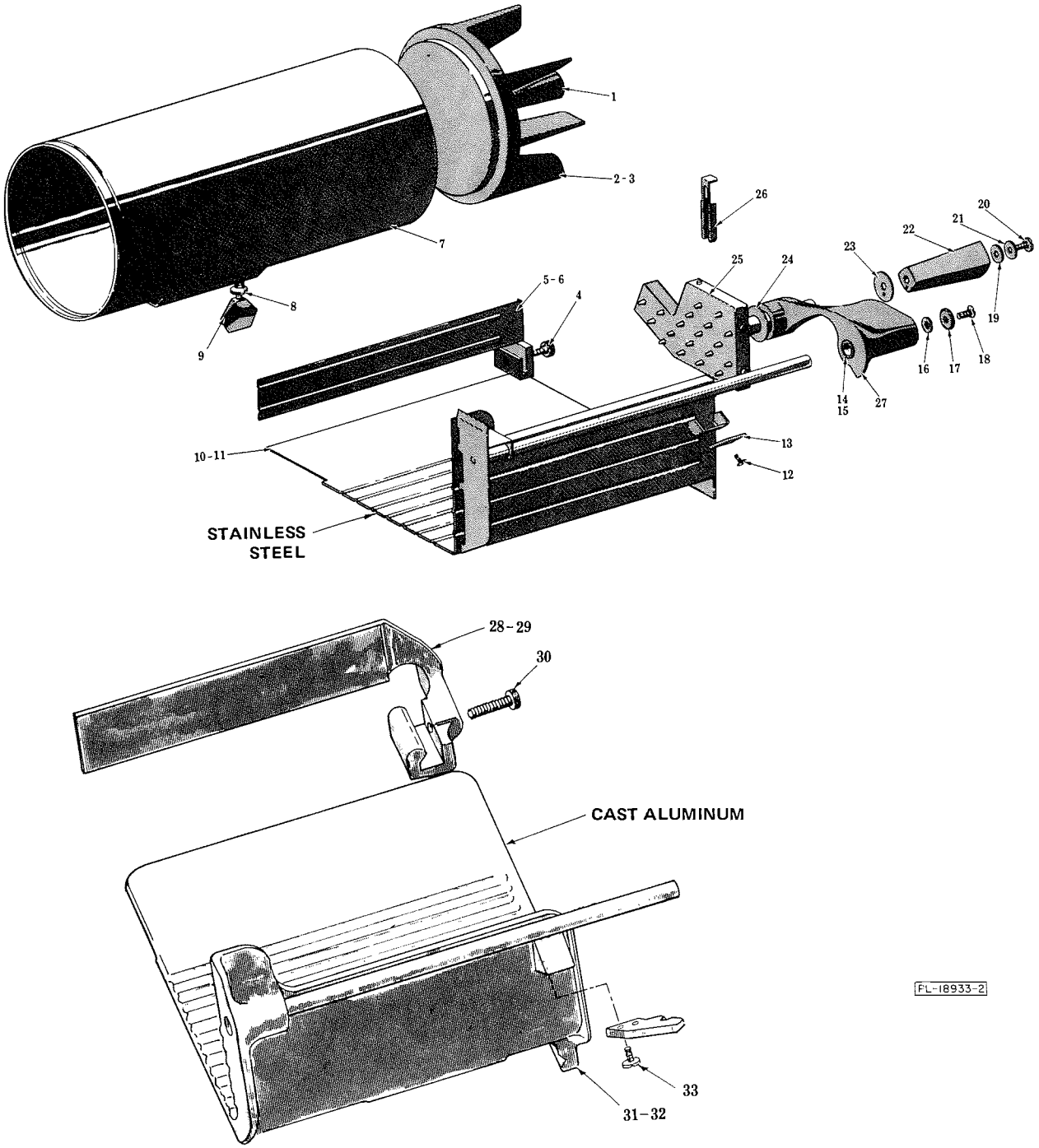

1712 CARRIAGE TRAY UNIT

1712 CARRIAGE TRAY UNIT

ILLUS. PL-18933-2	PART NO.	NAME OF PART	AMT.
*1	P-70194	Handle - Carriage Tray	1
*2	R-75930	Plate - Pusher	1
*3	M-75945	Pusher Plate & Handle Assy. (Incls. items #1 & 2)	1
4	B-290984	Thumb Screw - Fence	1
5	D-291005-2	Carriage Fence & Thumb Screw Assy. (Incls. item #4) (SST)	1
6	D-291005-1	High Fence & Thumb Screw Assy. (Horizontal Carriage Tray) (Incls. item #4) (SST)	1
*7	D-118332-1	Tube & Angles Seat Assy	1
*8	A-107364	Washer	2
*9	C-108197-13	Thumb Screw	1
10	E-290972-1	Carriage Tray & Slide Rod Assy. (SST)	1
11	E-290975	Horizontal Carriage Tray & Slide Rod Assy. (SST)	1
12	SD-15-4	Self-Tapping Screw - #10-24 x 1/2" Pan Hd., Type TT	2
13	M-72579	Clip - Meat Grip Retaining	1
14	M-75135	Bearing - Meat Grip Arm	2
15	WS-21-19	Washer	AR
16	WL-6-16	Lock Washer - 1/4" Light	1
17	M-70305	Washer - Meat Grip Retaining	1
18	SC-16-5	Mach. Screw - 1/4"-20 x 5/8" Oval Hd	1
19	M-70344	Washer - Handle Tension	1
20	M-68042	Screw - Truss Hd. "Nylok"	1
21	M-70345	Washer - Handle Retaining	1
22	P-70202	Handle - Meat Grip	1
23	M-70387	Washer - Handle	1
24	M-70386	Washer	1
25	R-77534	Meat Grip Assy	1
26	P-70341	Meat Holder - Meat Grip	2
27	M-75138-2	Meat Grip Arm & Bearing Assy. (Incls. item #14)	1
28	B-111038-3	Carriage Fence & Thumb Screw Assy. (Incls. item #32) (Cast Alum.) (Use with item #31)	1
29	B-111038-4	High Fence & Thumb Screw Assy. (Horizontal Carriage Tray) (Incls. item #32) (Cast Alum.) (Use with item #32)	1
30	M-70448	Thumb Screw - Fence (Use with items #28 or 29)	1
31	M-72758	Carriage Tray & Slide Rod Assy. (Cast Alum.) (Use with item #28)	1
32	M-74027-2	Horizontal Carriage Tray & Slide Rod Assy. (Cast Alum.) (Use with item #29)	1
33	M-68042	Screw - Truss Hd. "Nylok"	2
	*ML-31329-Z	Food Chute Attachment Assy. (Incls. items #3, 7, 8 & 9)	1
	E-290976-2	Carriage Tray, Meat Grip & Arm Assy. (Incls. items #8, 9, 10, 12, 13, 15 thru 22 & 24 thru 27) (SST)	1
	E-290977	Horizontal Carriage Tray, Meat Grip & Arm Assy. (Incls. items #6, 8, 9 & 11 thru 27) (SST)	1
	D-103732-2	Carriage Tray, Meat Grip & Arm Assy. (Incls. items #13, 16 thru 27, 31, 33, 34 & #2 & 3 on page 16) (Cast Alum.)	1
	D-103733-2	Horizontal Carriage Tray, Meat Grip & Arm Assy. (Incls. items #13, 16 thru 27, 32, 33, 34 & #2 & 3 on page 16) (Cast Alum.)	1

*Attachment Chute (Special, use in place of Carriage).

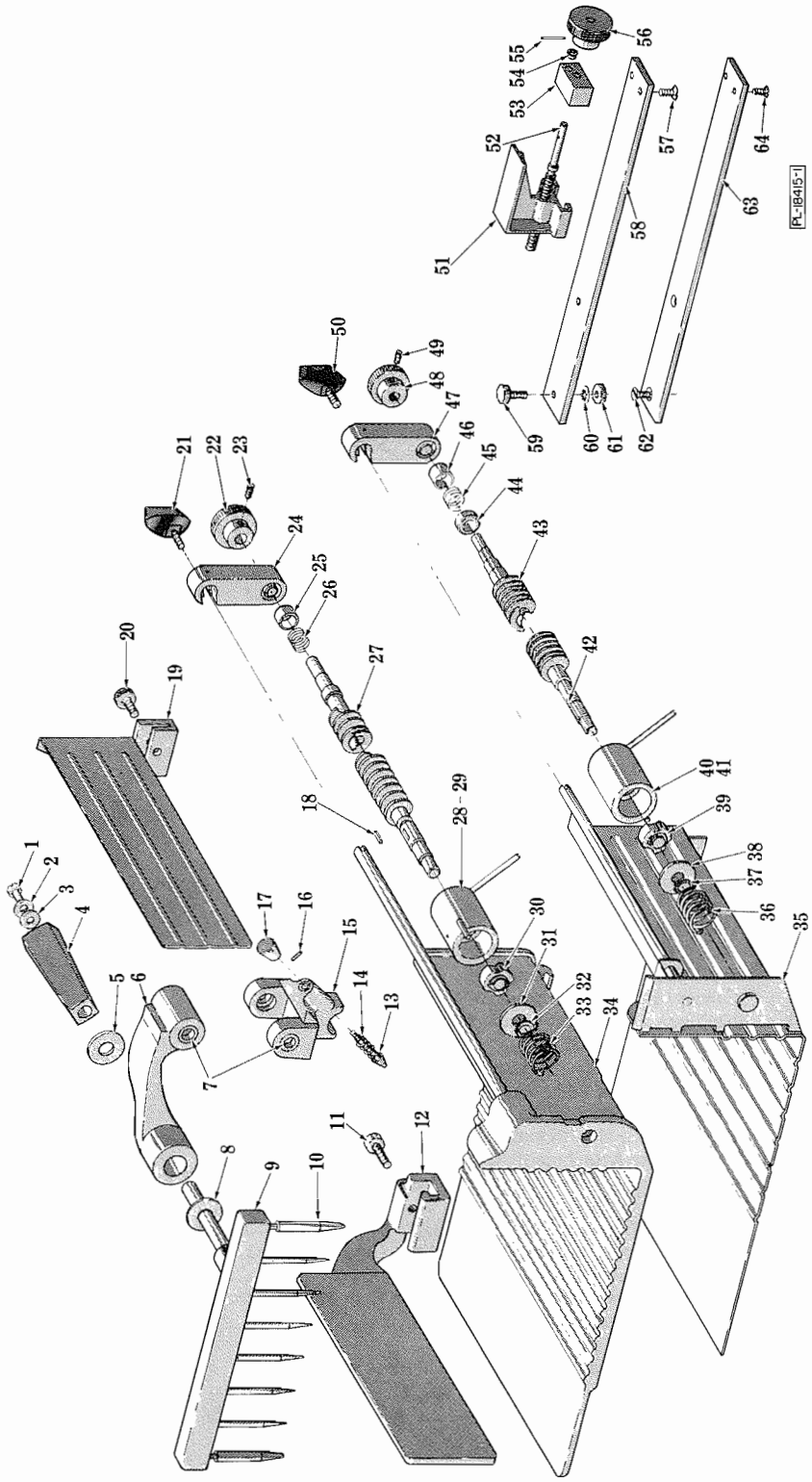

1712R CARRIAGE TRAY UNIT

1712R CARRIAGE TRAY UNIT

ILLUS. PL-18415-1	PART NO.	NAME OF PART	AMT.
1	M-68042	Screw - Truss Hd. "Nylok"	1
2	M-70345	Washer - Handle Retaining	1
3	M-70344	Washer - Handle Tension	1
4	P-70202	Handle - Meat Grip	1
5	M-70387	Washer - Handle	1
6	B-105077-2	Meat Grip Arm & Bearing Assy. (Incls. item #7)	1
7	M-75135	Bearing - Meat Grip Arm	4
8	M-70386	Washer	1
9	C-105134-2	Meat Grip Assy. (Incls. item #10)	1
10	A-105098	Cover - Meat Grip Pin	2
**11	M-70448	Thumb Screw - Fence	1
**12	B-111038-4	High Fence & Thumb Screw Assy. (Incls. item #11)	1
13	A-105067	Plunger - Feed Screw	1
14	A-105065	Spring - Plunger	1
15	A-114912	Plunger Housing Assy. (Incls. items #7, 13, 14, 16 & 17)	1
16	PG-7-44	Groov-Pin - Type E, 3/32" x 7/16"	1
17	B-116491	Knob - Plunger	1
**18	A-105393	Key	1
*19	D-291005-1	High Fence & Thumb Screw Assy. (Incls. item #20)	1
*20	B-290984	Thumb Screw - Fence	1
**21	C-108197-9	Thumb Screw	1
**22	---	Knob - Feed Screw (Not Available Order Items #48 & 49)	1
**23	SC-49-21	Set Screw - #10-24 x 5/16" Hdls., Kn. Cup Pt	1
**24	B-105240	Feed Screw Latch & Bushing Assy	1
**25	A-105066	Cage - Spring	1
**26	A-105063	Spring - Feed Screw	1
**27	C-105006	Screw - Feed	1
**28	B-105254	Clutch Housing Assy. (Incls. item #29)	1
**29	A-105057	Bushing - Clutch Housing	1
**30	A-105073	Clutch - Special	1
**31	A-105068	Washer - Clutch Housing	1
**32	RR-4-5	Retaining Ring	1
**33	A-105064	Spring - Clutch Housing	1
**34	D-105079-2	Carriage Tray & Slide Rod Assy	1
*35	E-290973	Carriage Tray & Slide Rod Assy	1
*36	A-105064	Spring - Clutch Housing	1
*37	RR-4-5	Retaining Ring	1
*38	A-105068	Washer - Clutch Housing	1
*39	A-105073	Clutch Special	1
*40	B-290965	Clutch Housing Assy. (Incls. item #41)	1
*41	A-105057	Bushing	1
*42	A-105393	Key	1
*43	D-290968	Screw - Feed	1
*44	B-290651	Sleeve - Feed Screw	1
*45	A-105063	Spring - Feed Screw	1
*46	A-105066	Cage - Spring	1
*47	B-105240	Feed Screw Latch & Bushing Assy	1
*48	B-291342	Knob - Feed Screw	1
*49	SC-55-2	Set Screw - 1/4"-20 x 1/4" Hdls., Kn. Cup Pt	1
*50	C-108197-9	Thumb Screw	1
51	C-105186	Block - Actuating	1
52	A-105071	Screw - Adjusting	1
53	B-105075	Retainer - Adjusting Screw	1
54	M-79686	Catch - Friction	1
55	RP-2-33	Rollpin - 3/32" Dia. x 1" Lg	1
56	A-105069	Knob - Adjusting Screw	1
**57	SC-22-19	Mach. Screw - #10-24 x 1/2" Flat Hd	2
**58	C-105015-2	Slide Plate - Adjusting Block	1
**59	SC-41-11	Cap Screw - 5/16"-18 x 3/4" Hex Hd	2
**60	WL-8-22	Lock Washer - 5/16" Int. Shakeproof	2
**61	NS-9-41	Full Nut - 5/16"-18 Hex Fin	2
*62	SC-22-39	Mach. Screw - 1/4"-20 x 5/8" Flat Hd	2
*63	C-291343-2	Slide Plate - Actuating Block	1
*64	SC-22-19	Mach. Screw - #10-24 x 1/2" Flat Hd	2
	C-105078	Slide Plate, Knob, Actuating Block & Adj. Screw Assy. (Incls. items #51, thru 56, 63 & 64)	1

*Use with Fabricated (SST) Tray.
**Use with Cast (Alum.) Tray.

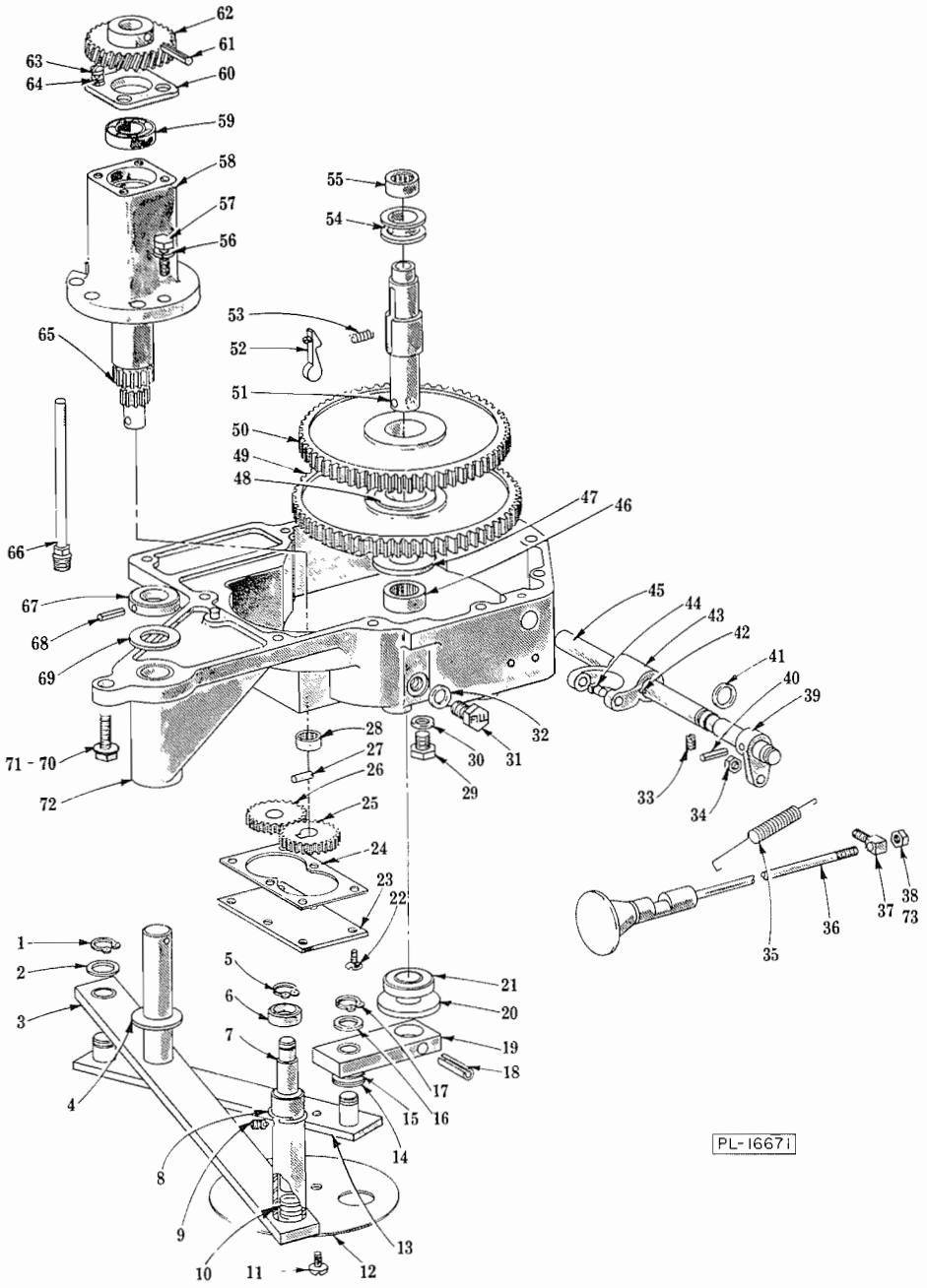

1712/1712R GEAR CASE UNIT

ILLUS. PL-16671	PART NO.	NAME OF PART	AMT.
1	RR-4-17	Retaining Ring	1
2	WS-7-21	Washer	1
3	R-70259	Engaging Arm Assy	1
4	M-70283	Washer - Pivot Shaft Thrust	1
5	RR-4-3	Retaining Ring	1
6	M-70303	Roller - Engaging Mech	1
7	M-70295	Shaft - Engaging Mech	1
8	M-70396	Ring - Stop Retaining	1
9	M-70324	Stop - Engaging Mech. Shaft	1
10	M-70307	Spring - Engaging Mech	1
11	SC-9-28	Mach. Screw - #10-24 x 3/8" Rd. Hd	2
12	B-103915	Cover Plate - Connecting Rod	2
13	P-70268	Connecting Rod Assy	1

1712/1712R GEAR CASE UNIT (Cont.)

ILLUS. PL-16671	PART NO.	NAME OF PART	AMT.
14	WS-8-9	Washer	2
15	WS-8-8	Washer	1
16	WS-7-21	Washer	1
17	RR-4-17	Retaining Ring	1
18	RP-2-46	Rollpin - 1/4" Dia. x 1-1/4" Lg	1
19	B-123889	Arm & Bearing Assy	1
20	M-70290	Washer - Crank Arm Thrust	1
21	M-70442	Seal - Drive Shaft	1
22	SC-14-76	Mach. Screw - #10-24 x 3/8" Flat Hd	6
23	P-70234	Cover - Gear Pump Bottom	1
24	M-70244	Gasket - Bottom Cover	1
25	C-70243	Gear - Oil Pump Drive (27T)	1
26	C-70242	Gear - Oil Pump Idler (27T)	1
27	D-11800-200	Dowel	1
28	BN-2-13	Needle Bearing - Torrington #B-86	1
29	SC-62-68	Cap Screw - 1/2"-20 x 3/4" Hex Hd	1
30	WS-21-21	Washer	1
31	M-64465-3	Plug - Oil Fill	1
32	WS-21-20	Washer	1
33	SC-63-14	Set Screw - #8-32 x 1/4" Hdls., Flat Pt	1
34	NS-32-1	Stop Nut - #10-24 "Flexloc"	1
35	M-70285	Spring - Shifter Mech	1
36	M-70446	Shift Rod, Selector & Knob Assy	1
37	M-70286	Knuckle - Shifter	1
38	NS-9-30	Mach. Nut - #10-32 Hex	2
39	M-70296	Bracket - Shifter	1
40	RP-2-28	Rollpin - 3/16" Dia. x 3/4" Lg	1
41	D-67500-2	"O" Ring	1
42	R-12430-3	Key	1
43	M-61654	Yoke - Shifter	1
44	M-61655	Shoe - Shifter	2
45	P-70267	Shaft - Shifter	1
46	BN-2-15	Needle Bearing - Torrington #B-126	1
47	M-70281	Washer - Gear Thrust	1
48	M-70274	Collar - Diving Key	1
49	R-72715	Gear - Driven (119T)	1
50	R-70170	Gear - Driven (114T)	1
51	E-123952	Shaft - Crank Arm Drive	1
52	C-114356	Key - Diving	1
53	M-70308	Spring - Diving Key	1
54	M-61656	Sleeve - Clutch Shifter	1
55	BN-2-14	Needle Bearing - Torrington #M-881	1
56	WL-3-37	Lock Washer - 1/4" Medium	3
57	SC-36-6	Cap Screw - 1/4"-20 x 1" Hex Hd	3
58	R-70156	Carrier - Pinion Shaft Bearing	1
59	BB-15-37	Ball Bearing - N.D. #3L03	1
60	B-116714	Retainer - Bearing	1
61	RP-3-8	Rollpin - 3/16" Dia. x 1-1/8" Lg	1
62	C-70159	Gear - Worm (29T)	1
63	SC-11-17	Mach. Screw - #10-24 x 1/2" Fil. Hd	4
64	WL-3-21	Lock Washer - #10 High Collar	4
65	D-72716	Shaft - Pinion (19T & 14T)	1
66	M-70248	Fitting & Oil Tube Assy	1
67	M-70275	Collar - Pivot Shaft Thrust	1
68	RP-3-12	Rollpin - 1/8" Dia. x 1-1/4" Lg	1
69	M-70283	Washer - Thrust	1
70	SD-33-8	Self-Tapping Screw - 5/16"-18 x 1" Hex Washer Hd. Type TT	4
71	SD-33-9	Self-Tapping Screw - 5/16"-18 x 3" Hex Washer Hd. Type TT	7
72	D-124640-1	Gear Case, Bearing & Dowel Assy. (Incls. item #21)	1
73	WL-8-13	Lock Washer - #10 Int. Shakeproof	2
	R-72714	Brg. Carrier, Pinion Shaft & Gear Assy. (Incls. items #58 thru 65)	1
	A-106933	Drive Shaft Assy. (Incls. items #51, 52, 53 & 54)	1

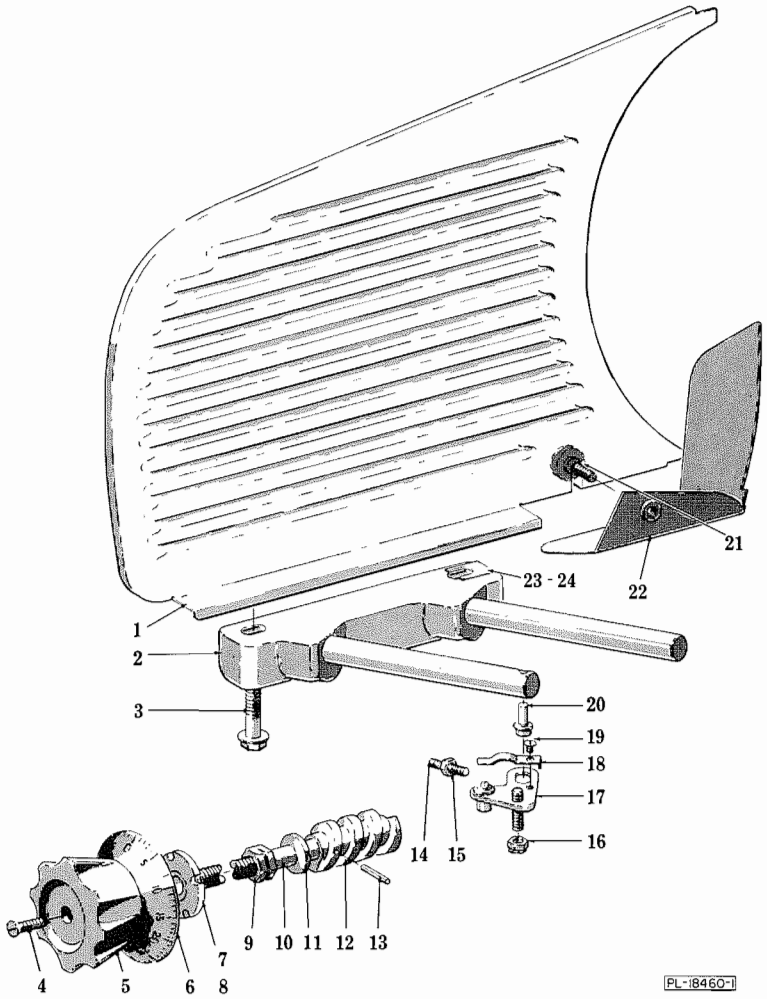

GAUGE PLATE & INDEXING MECH.

ILLUS. PL-18460-1	PART NO.	NAME OF PART	AMT.
1	D-124768	Gauge Plate Unit	1
2	P-88740-2	Gauge Plate Support & Slide Rod. Assy	1
3	B-112913	Screw - Special	2
4	SC-23-10	Mach. Screw - #10-24 x 3/4" Oval Hd	1
5	C-114214	Cap - Index Knob	1
6	B-118175	Dial Assy	1
7	B-76948	Disc - Indexing Drive	1
8	RP-2-40	Rollpin - 3/32" Dia. x 3/4" Lg	1
9	V-10928-2	Nut - Special	2
10	M-87494	Shaft - Indexing	1
11	M-88298	Washer - Belleville	2
12	M-87495	Worm - Indexing	1
13	RP-2-22	Rollpin - 5/32" Dia. x 3/4" Lg	1
14	SC-63-28	Set Screw - 1/4"-20 x 1" Hdls., Flat Pt	1
15	NS-17-1	Jam Nut - 1/4"-20 Hex Fin	1
16	NS-32-12	Stop Nut - 5/16"-18 "Flexloc"	1
17	M-70425	Indexing Plate, Roller, Collar & Stud Assy. (Incls. items #18 & 19)	1
18	V-20610	Spring - Indexing Plate	1
19	SC-8-14	Mach. Screw - #10-32 x 3/16" Rd. Hd	1
20	M-70343	Roller - Indexing Plate (Straight)	1
**21	B-109702	Thumb Screw	1
**22	B-105256	Meat Deflector	1
*23	B-291171-1	Spacer - Gauge Plate Sprocket (.003" Thk.)	AR
*24	B-291171-2	Spacer - Gauge Plate Sprocket (.005" Thk.)	AR
	M-87493	Indexing Shaft & Worm Assy. (Incls. items #10, 12 & 13)	1

*1612 & 1712.
**1712R.

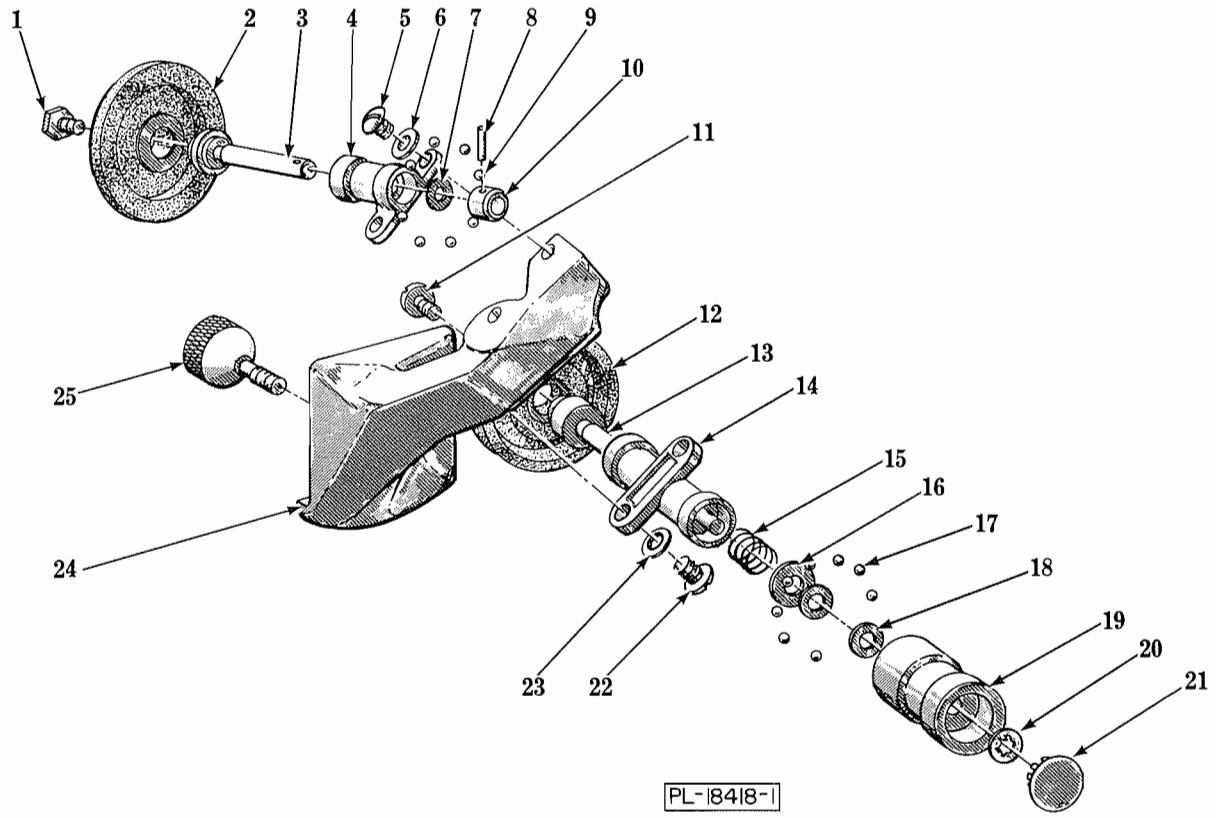

KNIFE SHARPENER UNIT
(BOTTOM MOUNTED)

ILLUS. PL-18418-1	PART NO.	NAME OF PART	AMT.
1	M-74833	Screw - Retaining	1
2	M-73851	Wheel - Grinding	1
3	M-74900	Shaft - Grinding Wheel	1
4	B-124659	Carrier - Grinding Wheel	1
5	SC-8-10	Mach. Screw - #10-24 x 1/2" Rd. Hd	2
6	WS-2-18	Washer	2
7	WS-3-40	Washer	1
8	RP-6-7	Rollpin - 3/32" x 7/16"	1
9	BA-2-1	Ball - 1/8" Dia	9
10	V-13199	Collar - Thrust	1
11	M-3404-7	Screw - Retaining	1
12	M-13201	Wheel - Truing	1
13	M-83092	Shaft - Truing Wheel	1
14	B-124658	Carrier - Truing Wheel	1
15	M-70313	Spring - Truing Wheel Load	1
16	WS-4-39	Washer	1
17	BA-2-1	Ball - 1/8" Dia	7
18	WS-2-18	Washer	2
19	B-124657	Cap - Truing Wheel	1
20	M-83089	Retaining Ring	1
21	M-69585-1	Plug - Button	1
22	SC-8-10	Mach. Screw - #10-24 x 1/2" Rd. Hd	2
23	WS-2-18	Washer	2
24	M-72801	Support - Sharpener	1
25	B-109702	Thumb Screw - Sharpener Attaching	1
	B-122794-4	Knife Sharpener Assy. (Incls. items #1 thru 25)	1
	M-73979	Truing Wheel Assy . (Incls. items #11 thru 21)	1
	M-74007	Grinding Wheel Assy. (Incls. items #1, 2, 3, 4, 7, 8, 9 & 10)	1

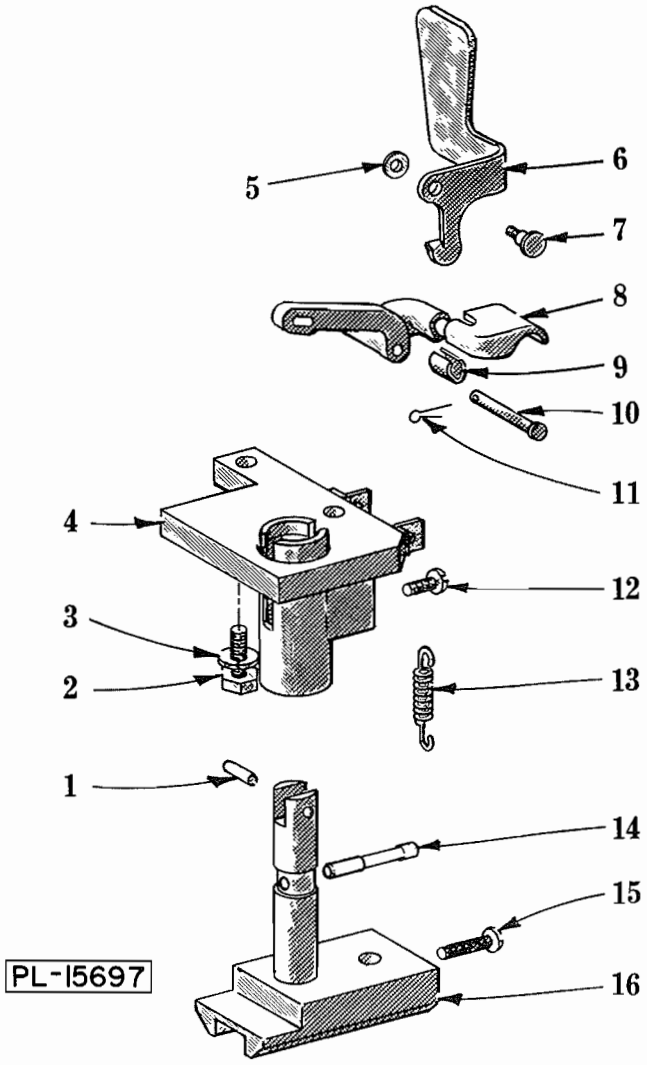

1712/1712R ACTUATING MECH. UNIT

ILLUS. PL-15697	PART NO.	NAME OF PART	AMT.
1	D-11800-137	Dowel	1
2	SC-37-75	Cap Screw - 5/16"-18 x 3/4" Hex Hd	2
3	WL-3-44	Lock Washer - 5/16" Medium	2
4	P-83424	Base and Brg. Assy	1
5	WS-2-43	Washer	1
6	P-70240	Clip - Locking	1
7	M-70351	Screw - Special	1
8	R-70233-2	Lever - Actuating Mech	1
9	M-70245	Clip - Lever Wear	1
10	M-70297	Pin - Hinge	1
11	PC-3-23	Cotter Pin - 1/16" x 1/2"	1
12	SC-60-21	Mach. Screw - #10-24 x 1/4" Rd. Hd	1
13	M-70399	Spring - Actuating Mech	1
14	B-118161	Dowel - Yoke & Shaft Locating	1
15	SC-60-20	Mach. Screw - #10-24 x 1" Rd. Hd	1
16	P-70266	Yoke & Shaft Assy	1