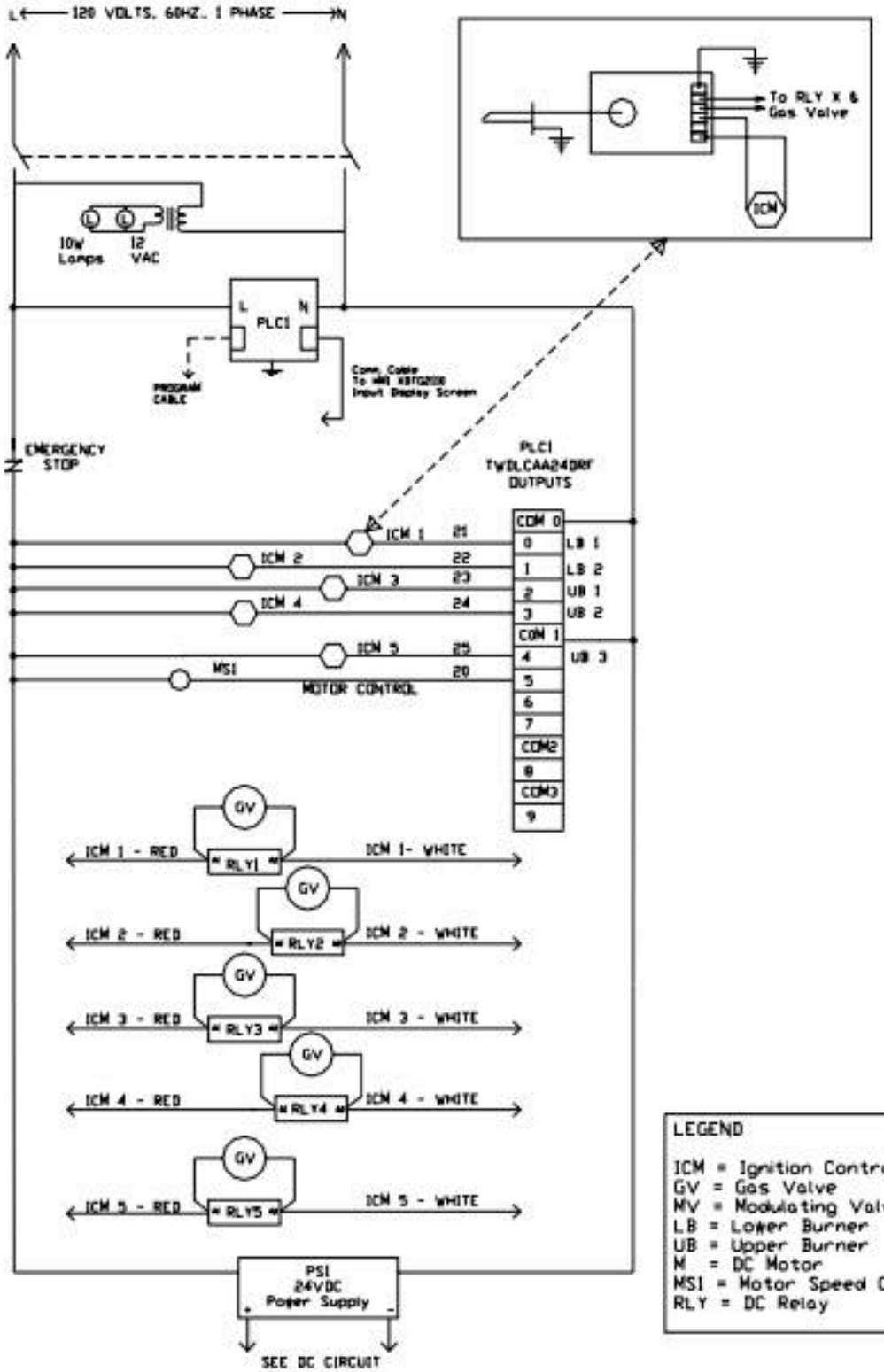

LEGEND
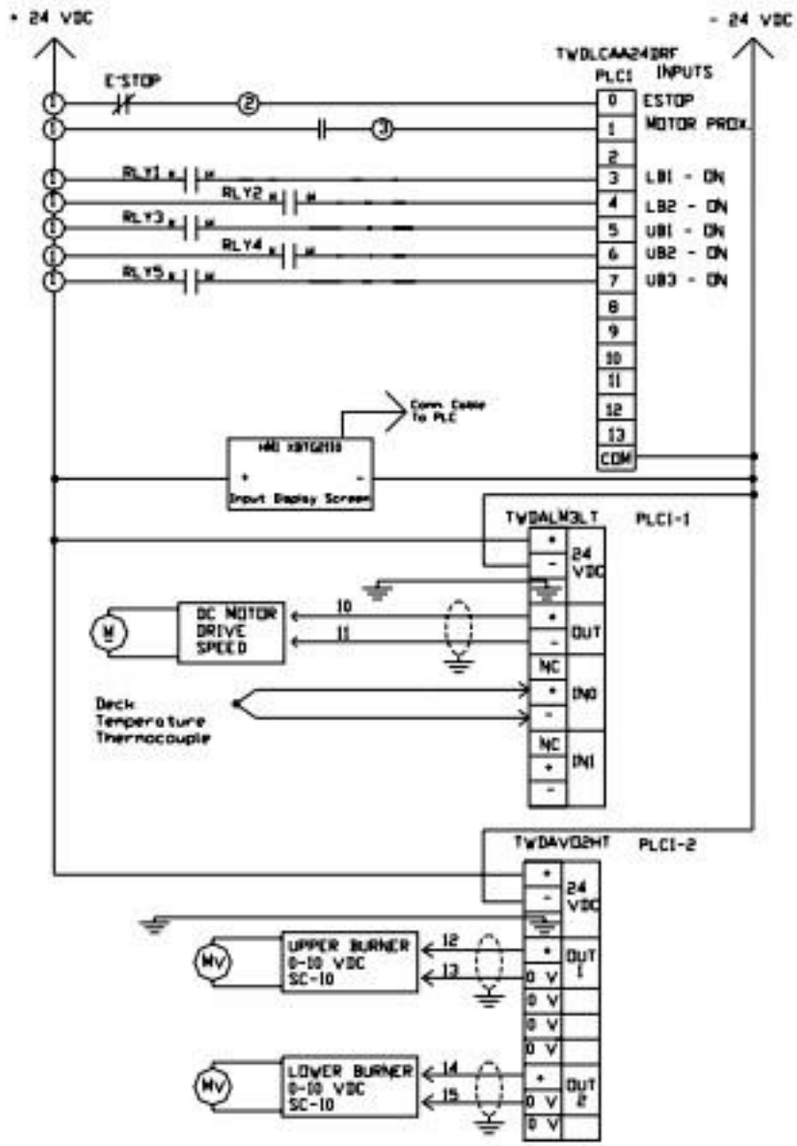
ICM = Ignition Control Module
GV = Gas Valve
MV = Modulating Valve
LB = Lower Burner
UB = Upper Burner
M = DC Motor
MSI = Motor Speed Control
RLY = DC Relay