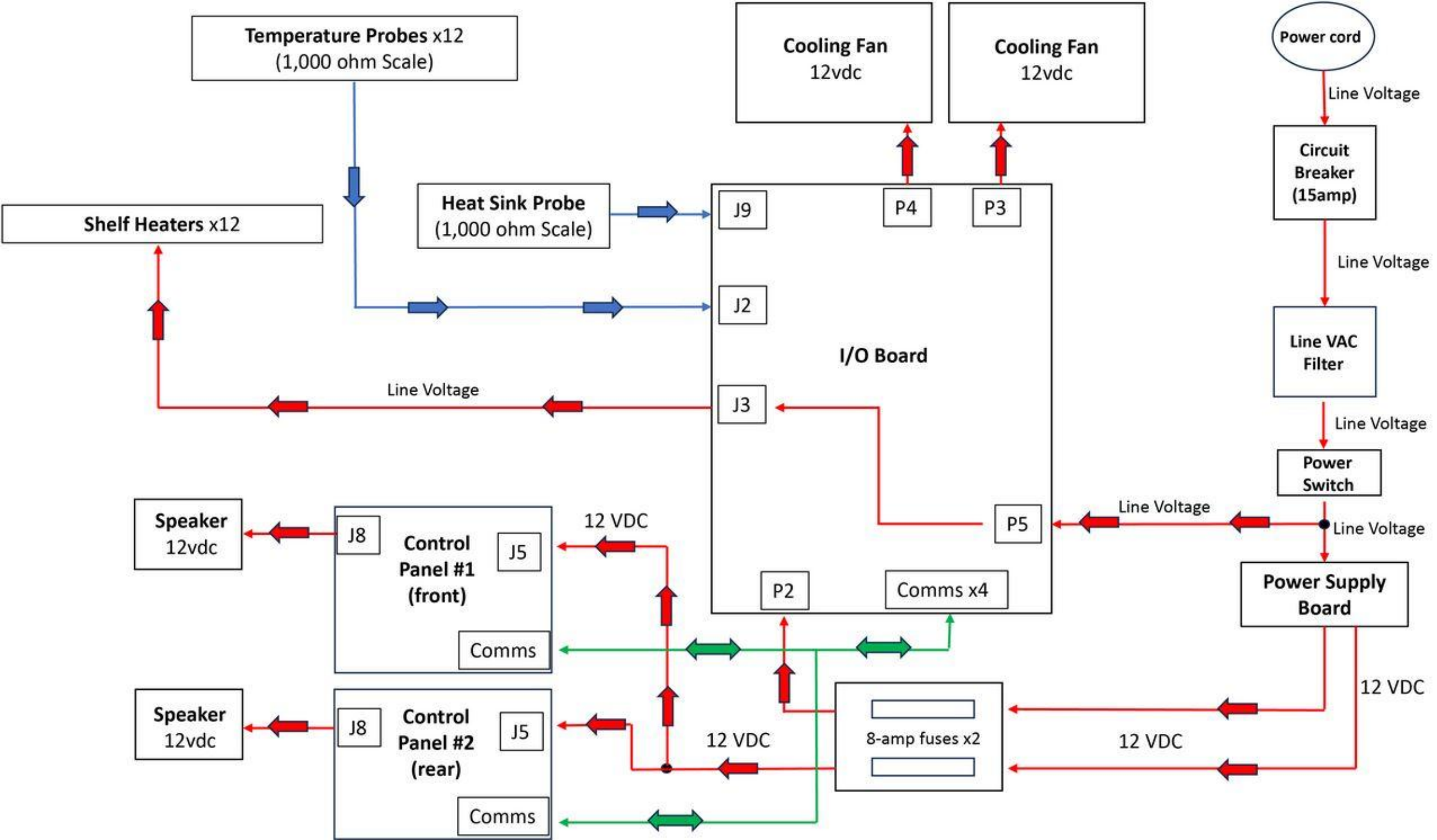
Temperature Probes x12
(1,000 ohm Scale)
Cooling Fan
12vdc
Cooling Fan
12vdc
Power cord
Line Voltage
Circuit Breaker (15amp)
Line Voltage
Line VAC Filter
Line Voltage
Power Switch
Line Voltage
Line Voltage
Power Supply Board
12 VDC
12 VDC
12 VDC
Shelf Heaters x12
Heat Sink Probe
(1,000 ohm Scale)
J9
P4
P3
J2
I/O Board
J3
P5
P2
Comms x4
Line Voltage
Speaker
12vdc
J8
Control Panel #1 (front)
J5
Comms
12 VDC
Speaker
12vdc
J8
Control Panel #2 (rear)
J5
Comms
12 VDC
8-amp fuses x2

THIS DRAWING IS THE CONFIDENTIAL AND PROPRIETARY PROPERTY OF HENNY PENNY CORP.

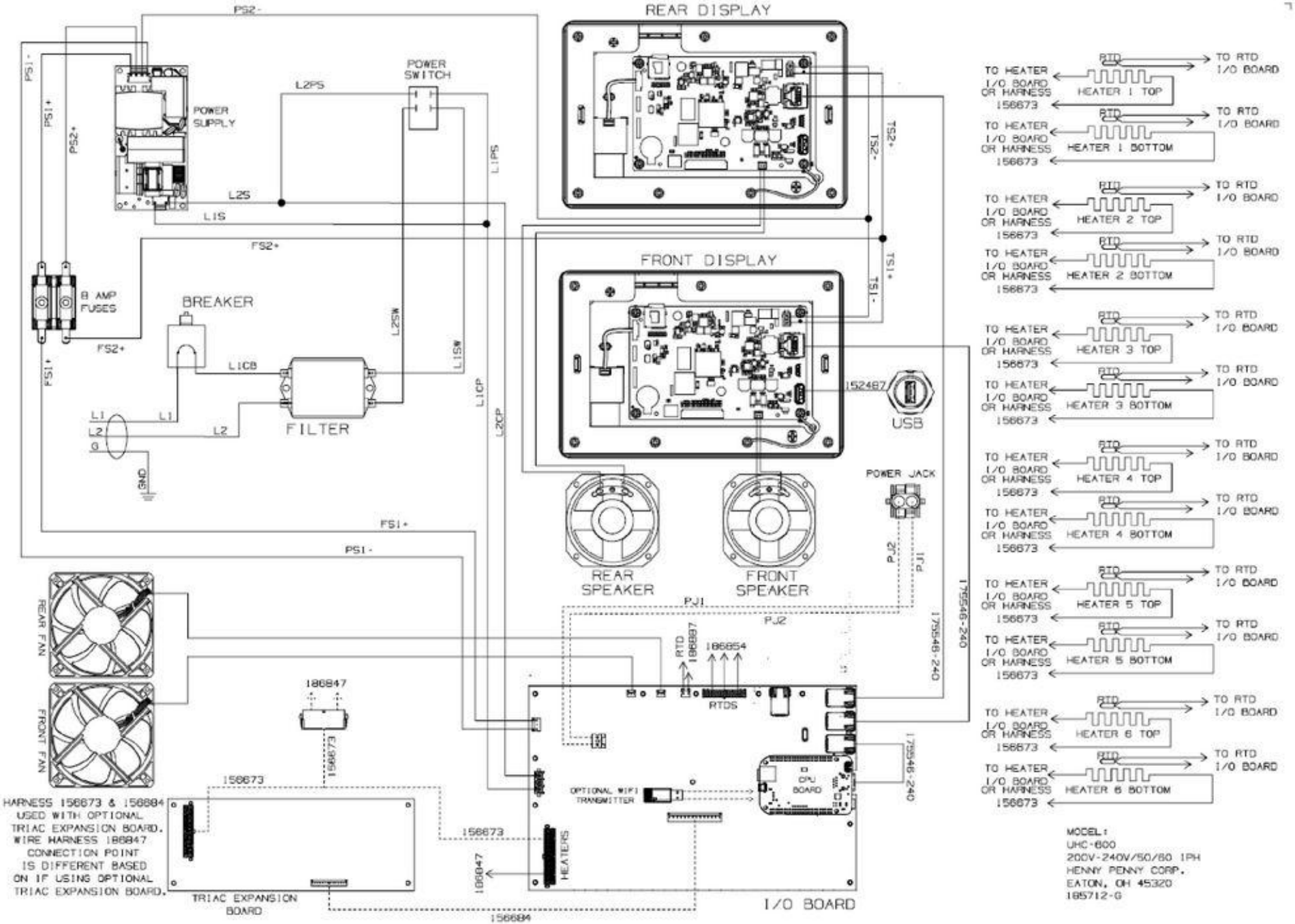
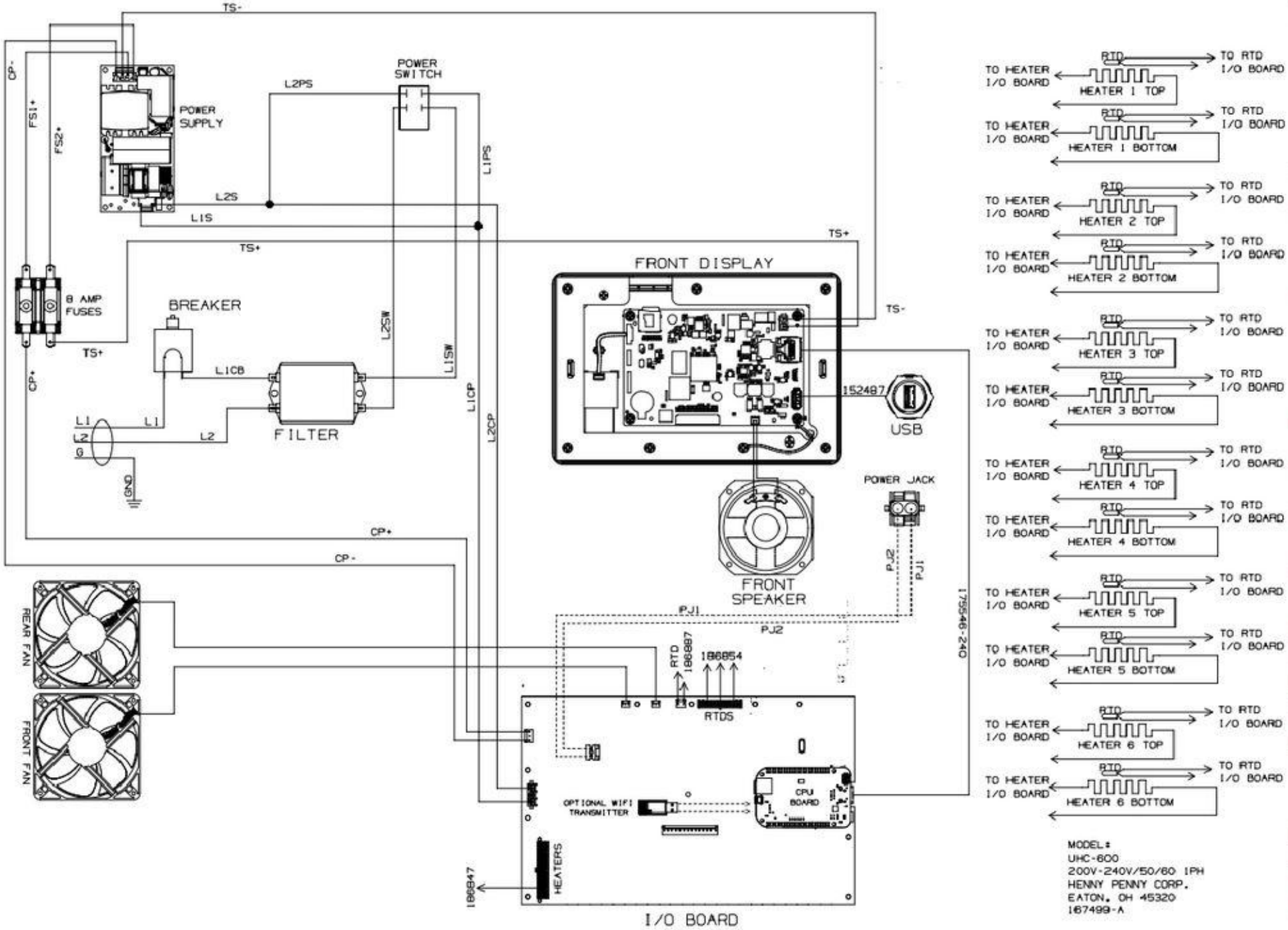
THIS DRAWING IS THE CONFIDENTIAL AND PROPRIETARY PROPERTY OF HENNY PENNY CORP.