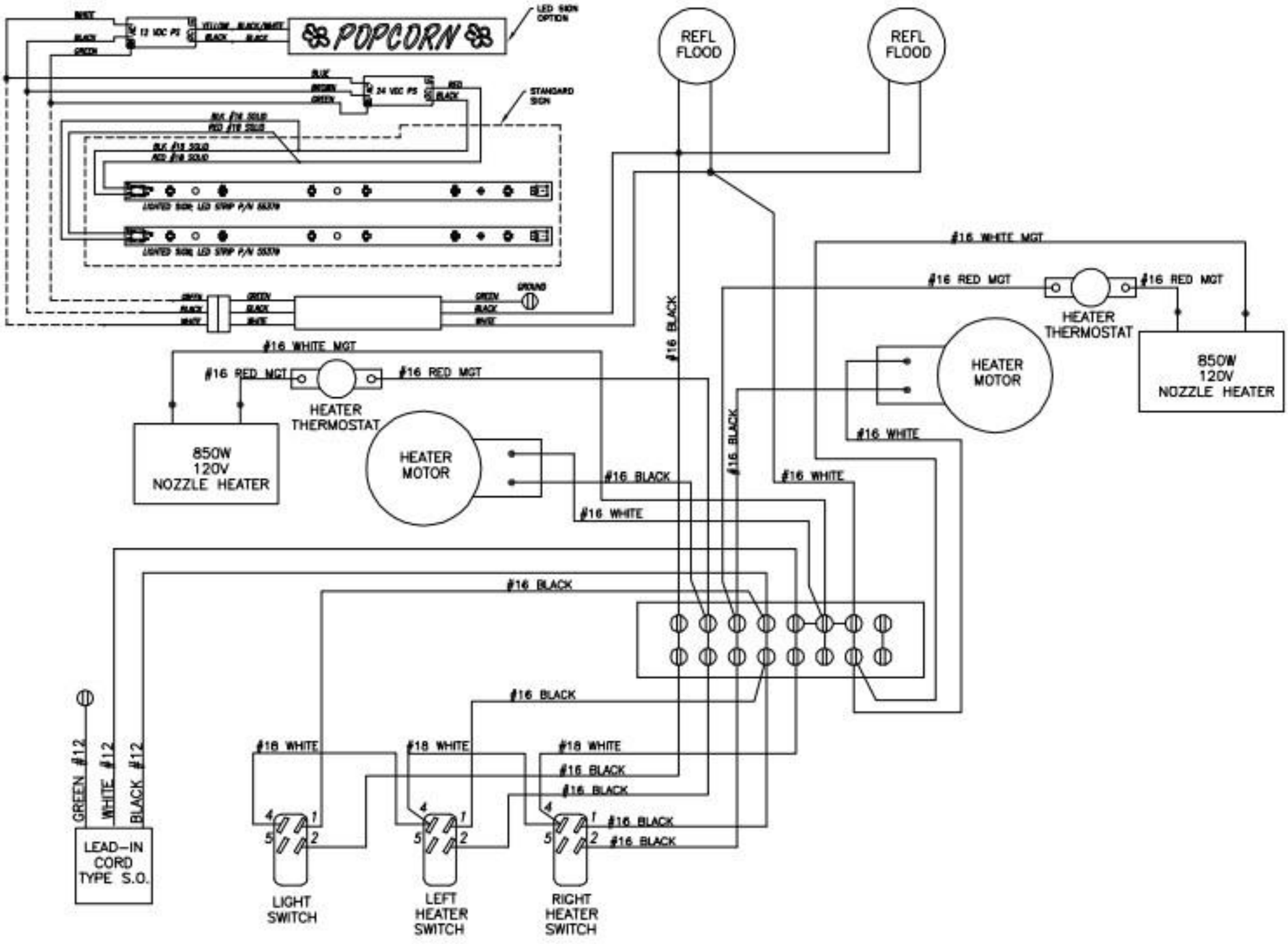
POPCORN
LED SIGN OPTION
STANDARD SIGN
REFL FLOOD
REFL FLOOD
#16 WHITE MGT
#16 RED MGT
#16 RED MGT
HEATER THERMOSTAT
HEATER MOTOR
850W 120V NOZZLE HEATER
#16 BLACK
#16 WHITE
#16 WHITE MGT
#16 RED MGT
#16 RED MGT
HEATER THERMOSTAT
HEATER MOTOR
850W 120V NOZZLE HEATER
#16 BLACK
#16 BLACK
#16 WHITE
#16 WHITE
#16 BLACK
#16 BLACK
#16 WHITE
#18 WHITE
#18 WHITE
#16 BLACK
#16 BLACK
#16 BLACK
#16 BLACK
GREEN #12
WHITE #12
BLACK #12
LEAD-IN CORD TYPE S.O.
LIGHT SWITCH
LEFT HEATER SWITCH
RIGHT HEATER SWITCH

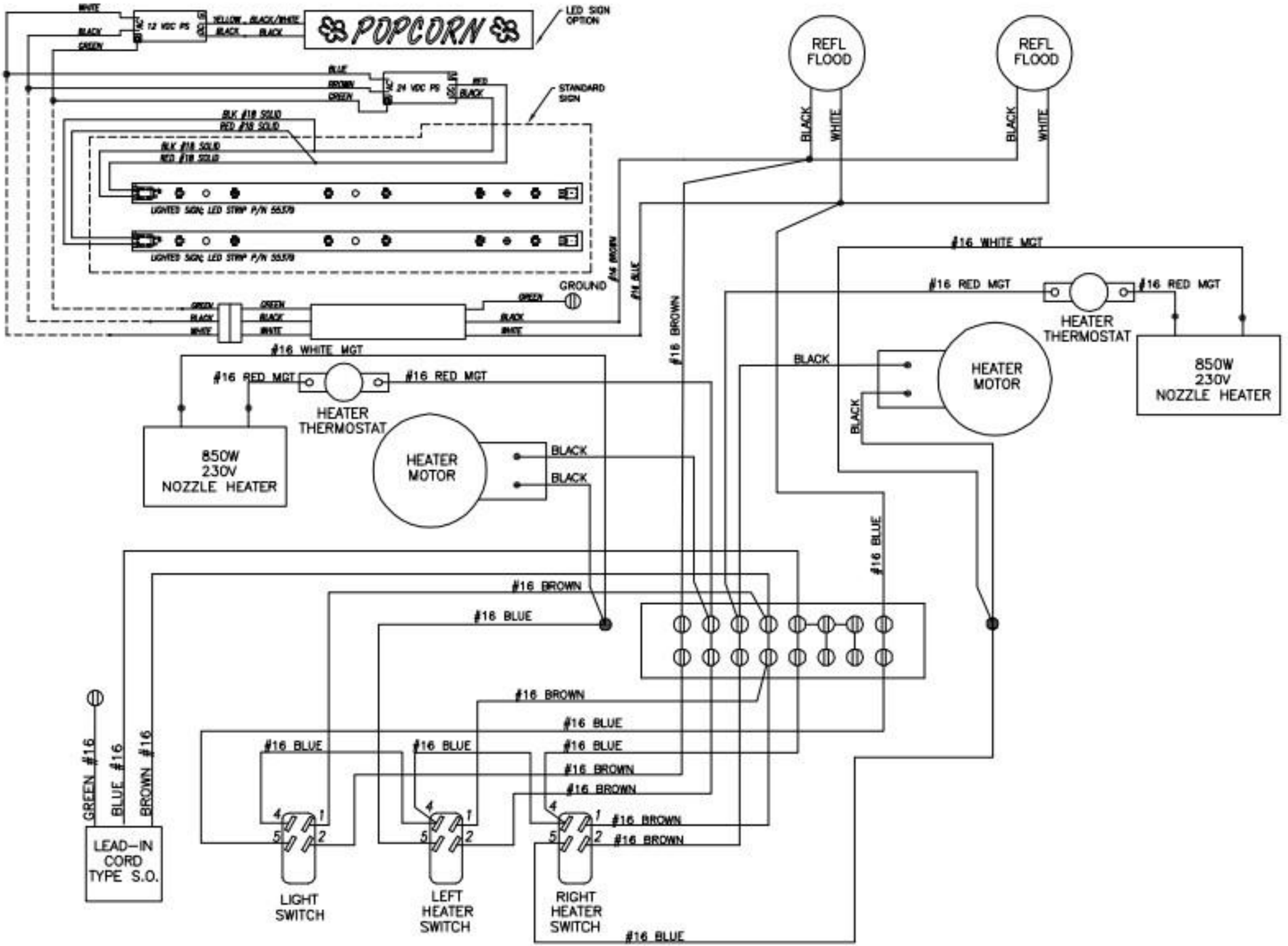
POPCORN
LED SIGN OPTION
12 VDC PS
24 VDC PS
STANDARD SIGN
BLK #18 SOLID
RED #18 SOLID
LIGHTED SIGN; LED STRIP P/N 55570
GROUND
REFL FLOOD
REFL FLOOD
BLACK
WHITE
#16 WHITE MGT
#16 RED MGT
HEATER THERMOSTAT
850W 230V NOZZLE HEATER
HEATER MOTOR
#16 BROWN
#16 BLUE
GREEN #16
BLUE #16
BROWN #16
LEAD-IN CORD TYPE S.O.
LIGHT SWITCH
LEFT HEATER SWITCH
RIGHT HEATER SWITCH