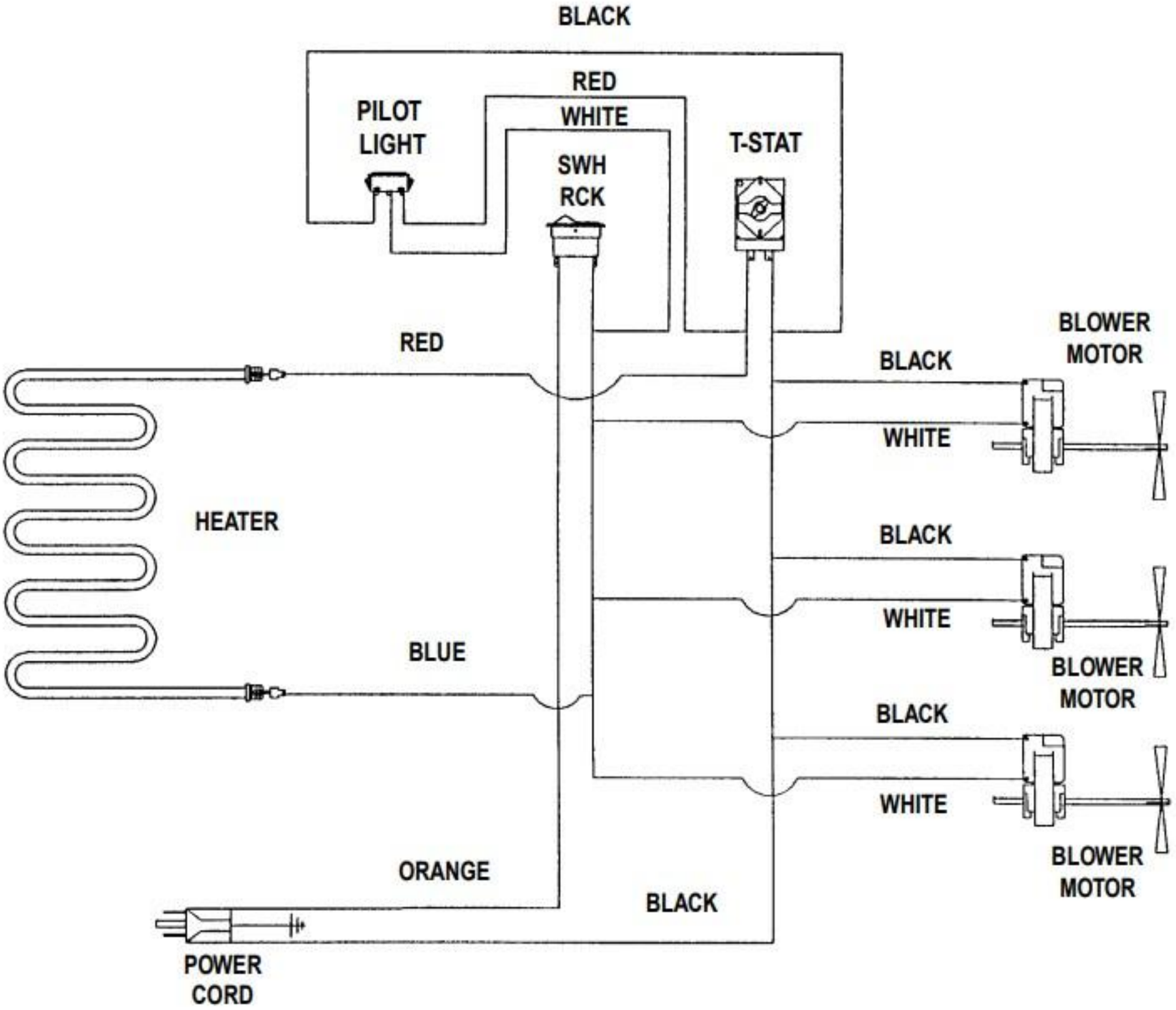
BLACK
RED
WHITE
PILOT
LIGHT
T-STAT
SWH
RCK
RED
BLOWER
MOTOR
BLACK
WHITE
HEATER
BLACK
WHITE
BLUE
BLOWER
MOTOR
BLACK
WHITE
BLOWER
MOTOR
ORANGE
BLACK
POWER
CORD