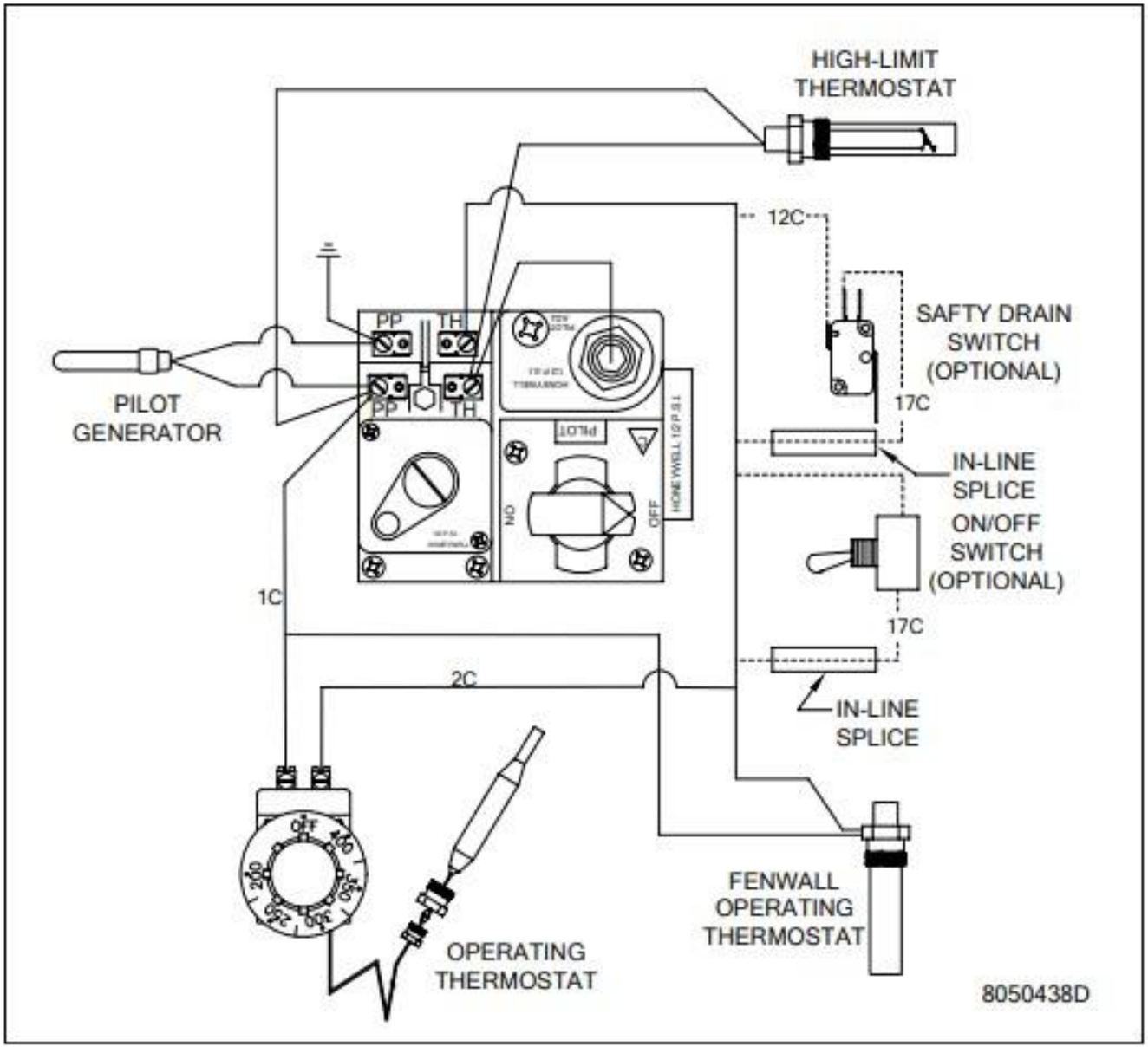

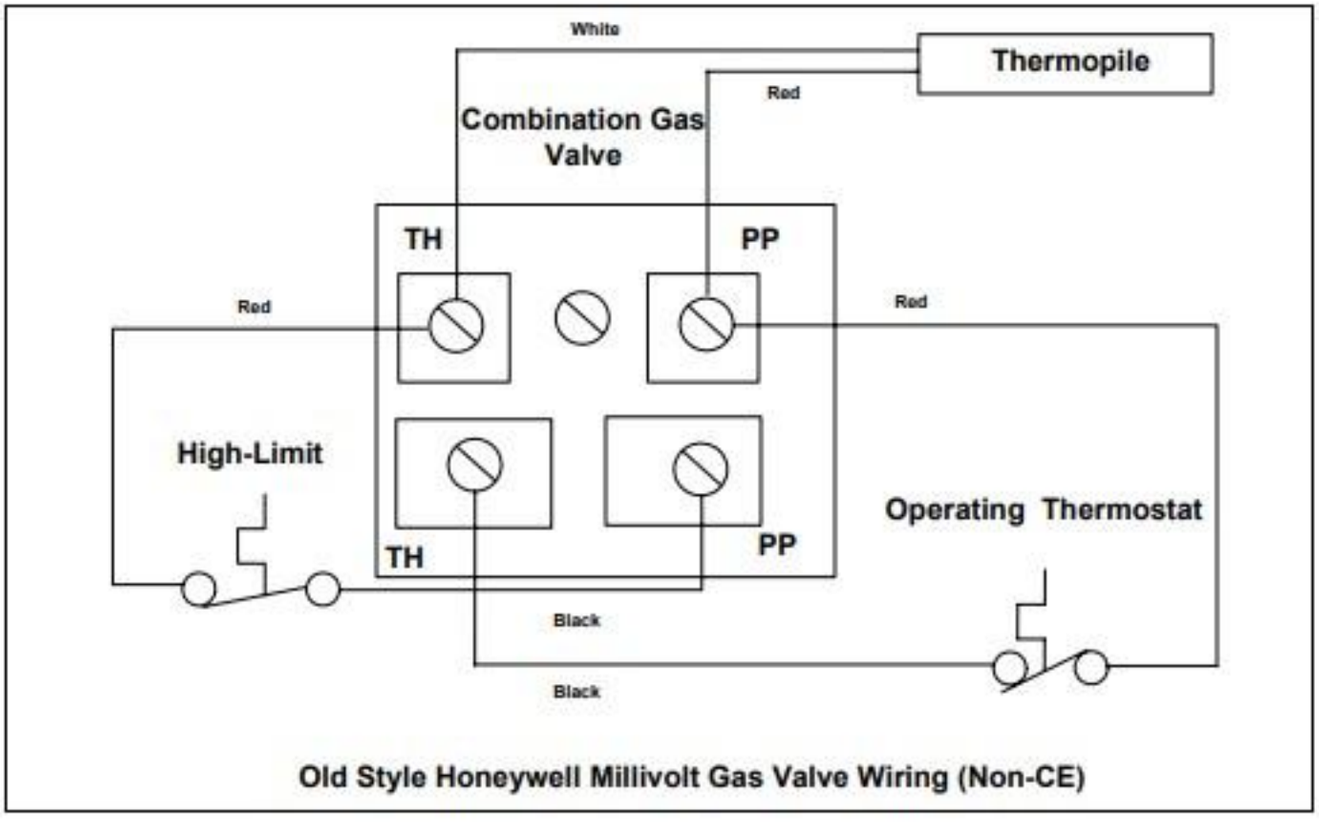

Old Style Honeywell Millivolt Gas Valve Wiring (Non-CE)

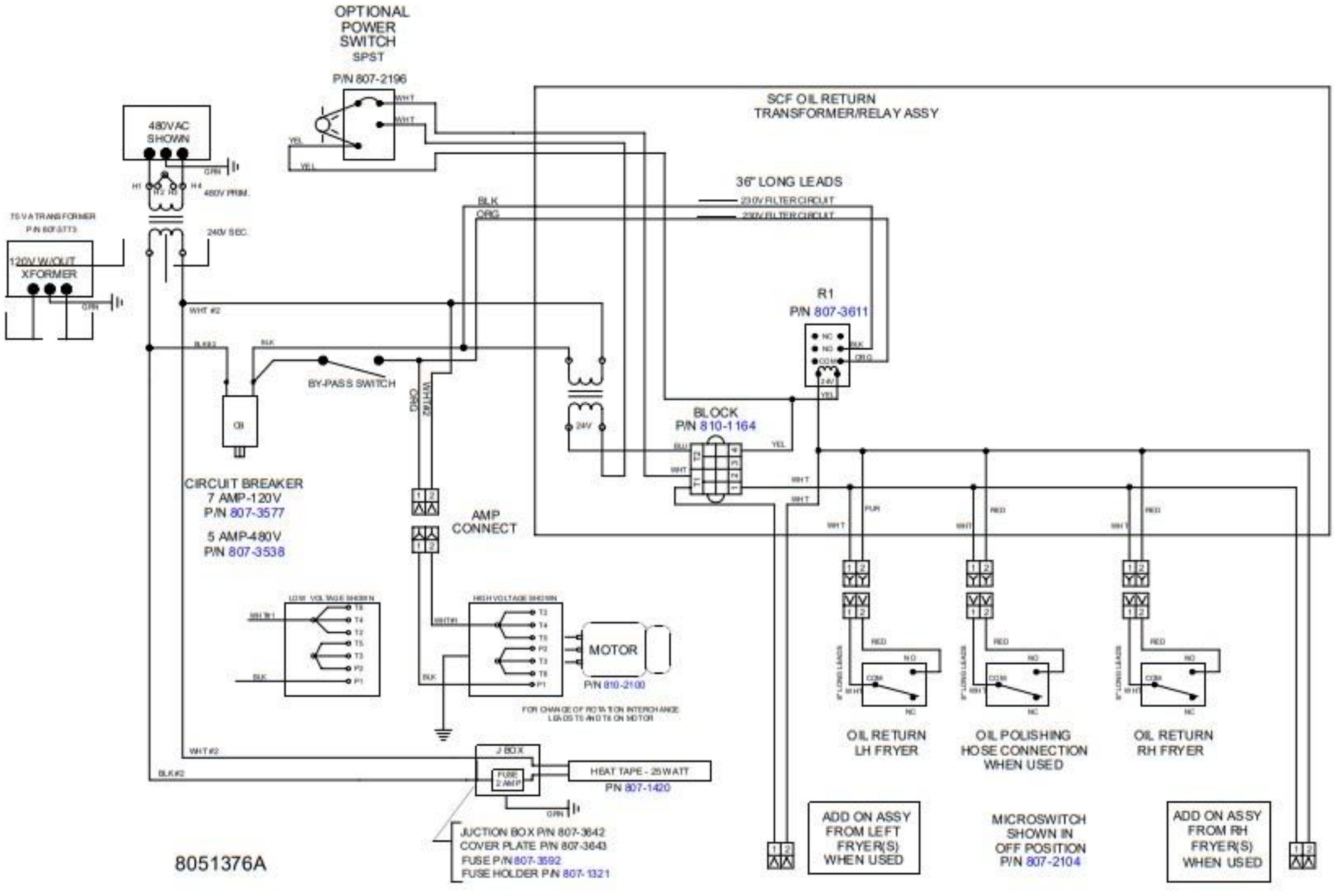
OPTIONAL
POWER
SWITCH
SPST
P/N 807-2196
WHT
WHT
YEL
YEL
SCF OIL RETURN
TRANSFORMER/RELAY ASSY
480VAC
SHOWN
GRN
H1
H2
H3
H4
480V PRIM.
240V SEC.
120V W/OUT
XFORMER
GRN
36" LONG LEADS
230V FILTER CIRCUIT
230V FILTER CIRCUIT
BLK
ORG
R1
P/N 807-3611
NC
NO
COM
BLK
ORG
24V
YEL
WHT #2
BLK#2
BLK
BY-PASS SWITCH
CB
ORG
WHT#2
24V
BLOCK
P/N 810-1164
BLU
WHT
YEL
WHT
WHT
CIRCUIT BREAKER
7 AMP-120V
P/N 807-3577
5 AMP-480V
P/N 807-3538
AMP
CONNECT
LOW VOLTAGE SHOWN
HIGH VOLTAGE SHOWN
WHT#1
BLK
WHT#1
BLK
MOTOR
P/N 810-2100
FOR CHANGE OF ROTATION INTERCHANGE
LEADS T5 AND T6 ON MOTOR
WHT
PUR
RED
RED
RED
NO
COM
NC
OIL RETURN
LH FRYER
OIL POLISHING
HOSE CONNECTION
WHEN USED
OIL RETURN
RH FRYER
WHT #2
BLK#2
J BOX
FUSE
2 AMP
HEAT TAPE - 25 WATT
P/N 807-1420
GRN
JUCTION BOX P/N 807-3642
COVER PLATE P/N 807-3643
FUSE P/N 807-3592
FUSE HOLDER P/N 807-1321
ADD ON ASSY
FROM LEFT
FRYER(S)
WHEN USED
MICROSWITCH
SHOWN IN
OFF POSITION
P/N 807-2104
ADD ON ASSY
FROM RH
FRYER(S)
WHEN USED
8051376A