H50 Series Gas Fryers

Installation and Operation Manual

Frymaster®

CE

CFESA
Commercial Food Equipment Service Association

Frymaster, a member of the Commercial Food Equipment Service Association, recommends using CFESA Certified Technicians.

24-Hour Service Hotline 1-800-551-8633

APRIL 2004

8195000

NOTICE

This appliance is intended for professional use only and is to be operated by qualified personnel only. A Frymaster/DEAN Factory Authorized Service Center (FASC) or other qualified professional should perform installation, maintenance, and repairs. Installation, maintenance, or repairs by unqualified personnel may void the manufacturer's warranty. See Chapter 1 of this manual for definitions of qualified personnel.

NOTICE

This equipment must be installed in accordance with the appropriate national and local codes of the country and/or region in which the appliance is installed. See NATIONAL CODE REQUIREMENTS in Chapter 2 of this manual for specifics.

NOTICE TO U.S. CUSTOMERS

This equipment is to be installed in compliance with the basic plumbing code of the Building Officials and Code Administrators International, Inc. (BOCA) and the Food Service Sanitation Manual of the U.S. Food and Drug Administration.

NOTICE

Drawings and photos used in this manual are intended to illustrate operational, cleaning and technical procedures and may not conform to onsite management operational procedures.

NOTICE TO OWNERS OF UNITS EQUIPPED WITH COMPUTERS

U.S.

This device complies with Part 15 of the FCC rules. Operation is subject to the following two conditions: 1) This device may not cause harmful interference, and 2) This device must accept any interference received, including interference that may cause undesired operation. While this device is a verified Class A device, it has been shown to meet the Class B limits.

CANADA

This digital apparatus does not exceed the Class A or B limits for radio noise emissions as set out by the ICES-003 standard of the Canadian Department of Communications.

Cet appareil numerique n'emet pas de bruits radioelectriques depassany les limites de classe A et B prescrites dans la norme NMB-003 edictee par le Ministre des Communcations du Canada.

⚠ DANGER

Improper installation, adjustment, maintenance or service, and unauthorized alterations or modifications can cause property damage, injury, or death. Read the installation, operating, and service instructions thoroughly before installing or servicing this equipment. Only qualified service personnel may convert this appliance to use a gas other than that for which it was originally configured.

⚠ DANGER

No structural material on the fryer should be altered or removed to accommodate placement of the fryer under a hood. Questions? Call the Frymaster/Dean Service Hotline at 1-800-551-8633.

⚠ DANGER

Adequate means must be provided to limit the movement of this appliance without depending upon the gas line connection. Single fryers equipped with legs must be stabilized by installing anchor straps. All fryers equipped with casters must be stabilized by installing restraining chains. If a flexible gas line is used, an additional restraining cable must be connected at all times when the fryer is in use.

⚠ DANGER

The front ledge of the fryer is not a step! Do not stand on the fryer. Serious injury can result from slips or contact with the hot oil.

⚠ DANGER

Do not store or use gasoline or other flammable liquids or vapors in the vicinity of this or any other appliance.

⚠ DANGER

Instructions to be followed in the event the operator smells gas or otherwise detects a gas leak must be posted in a prominent location. This information can be obtained from the local gas company or gas supplier.

⚠ DANGER

This product contains chemicals known to the state of California to cause cancer and/or birth defects or other reproductive harm.

Operation, installation, and servicing of this product could expose you to airborne particles of glasswool or ceramic fibers, crystalline silica, and/or carbon monoxide. Inhalation of airborne particles of glasswool or ceramic fibers is known to the State of California to cause cancer. Inhalation of carbon monoxide is known to the State of California to cause birth defects or other reproductive harm.

⚠ DANGER

The crumb tray in fryers equipped with a filter system must be emptied into a fireproof container at the end of frying operations each day. Some food particles can spontaneously combust if left soaking in certain shortening material.

⚠ WARNING

Do not bang fry baskets or other utensils on the fryer's joiner strip. The strip is present to seal the joint between the fry vessels. Banging fry baskets on the strip to dislodge shortening will distort the strip, adversely affecting its fit. It is designed for a tight fit and should only be removed for cleaning.

NOTICE

The Commonwealth of Massachusetts requires any and all gas products to be installed by a licensed plumber or pipe fitter.

THIS PAGE INTENTIONALLY LEFT BLANK.

H50 SERIES GAS FRYER
INSTALLATION & OPERATION MANUAL
TABLE OF CONTENTS

CHAPTER 1: General Information
1.1 Parts Ordering and Service Information 1-1
1.2 Safety Information 1-1
1.3 European Community (CE) Specific Information 1-2
1.4 Equipment Description 1-3
1.5 Installation, Operating, and Service Personnel 1-3
1.6 Definitions 1-3
1.7 Shipping Damage Claim Procedure 1-4
CHAPTER 2: Installation Instructions
2.1 General Installation Requirements 2-1
2.2 Caster/Leg Installation 2-3
2.3 Pre-Connection Preparations 2-3
2.4 Connection to Gas Line 2-4
2.5 Converting to Another Gas Type 2-7
CHAPTER 3: Operating Instructions
3.1 Start-Up Procedure 3-2
3.2 Boiling Out the Frypot 3-3
3.3 Shutting the Fryer Down 3-5
3.4 Controller Operation and Programming 3-5
CHAPTER 4: Filtration Instructions
4.1 Draining and Manual Filtering 4-1
4.2 Built-In Filtration System Operation 4-2
Preparing the Filter Unit for Use 4-2
Operation of the Filter Unit 4-4
Changing the Filter Paper 4-6
CHAPTER 5: Preventive Maintenance
5.1 Fryer Preventive Maintenance Checks and Service 5-1
Daily Checks and Service 5-1
Weekly Checks and Service 5-1
Monthly Checks and Service 5-3
Quarterly Checks and Service 5-4
Semi-Annual Checks and Service 5-7
5.2 Built-In Filtration System Preventive Maintenance Checks and Service 5-8
5.3 Annual/Periodic System Inspection 5-9
CHAPTER 6: Operator Troubleshooting
6.1 Introduction 6-1
6.2 Troubleshooting Fryers with Computer Magic III, Basket Lift Timer, or Digital Controller 6-2
6.3 Troubleshooting Fryers with Solid State (Analog) Controller 6-4
6.4 Troubleshooting the Built-In Filtration System 6-6
6.5 Troubleshooting the Basket Lift 6-6
6.6 Replacing the Ignition Module Fuse 6-7
6.7 Replacing the Controller or Controller Wiring Harness 6-8

THIS PAGE INTENTIONALLY LEFT BLANK.

H50 SERIES GAS FRYER
CHAPTER 1: GENERAL INFORMATION

1.1 Applicability and Validity

The (insert equipment family) model family has been approved by the European Union for sale and installation in the following EU countries: AT, BE, DE, DK, ES, FI, FR, GB, IE, IT, LU, NL, NO, PT and SE.

This manual is applicable to and valid for all (insert equipment family) units sold in English-speaking countries, including those in the European Union. Where conflicts exist between instructions and information in this manual and local or national codes of the country in which the equipment is installed, installation and operation shall comply with those codes.

This appliance is only for professional use and shall be used by qualified personnel only, as defined in Section 1.7.

1.2 Parts Ordering and Service Information

In order to assist you quickly, the Frymaster Factory Authorized Service Center (FASC) or Service Department representative requires certain information about your equipment. Most of this information is printed on a data plate affixed to the inside of the fryer door. Part numbers are found in the Installation, Operation, Service, and Parts Manual. Parts orders may be placed directly with your local FASC or distributor. Included with fryers when shipped from the factory is a list of Frymaster FASCs. If you do not have access to this list, contact the Frymaster Service Department at 1-800-551-8633 or 1-318-865-1711.

When ordering parts, the following information is required:

Model Number: _____
Serial Number: _____
Type of Gas or Voltage: _____
Item Part Number: _____
Quantity Needed: _____

Service information may be obtained by contacting your local FASC/Distributor. Service may also be obtained by calling the Frymaster Service Department at 1-800-551-8633 or 1-318-865-1711. When requesting service, please have the following information ready:

Model Number: _____
Serial Number: _____
Type of Gas: _____

In addition to the model number, serial number, and type of gas, please be prepared to describe the nature of the problem and have ready any other information that you think may be helpful in solving your problem.

RETAIN AND STORE THIS MANUAL IN A SAFE PLACE FOR FUTURE USE.

1.3 Safety Information

Before attempting to operate your unit, read the instructions in this manual thoroughly. Throughout this manual, you will find notations enclosed in double-bordered boxes similar to the ones that follow.

⚠ CAUTION

CAUTION boxes contain information about actions or conditions that ***may cause or result in a malfunction of your system.***

⚠ WARNING

WARNING boxes contain information about actions or conditions that ***may cause or result in damage to your system***, and which may cause your system to malfunction.

⚠ DANGER

DANGER boxes contain information about actions or conditions that ***may cause or result in injury to personnel***, and which may cause damage to your system and/or cause your system to malfunction.

Your fryer is equipped with automatic safety features:

1. High temperature detection shuts off gas to the burner assembly should the controlling thermostat fail.

2. An optional safety switch built into the drain valve prevents burner ignition with the drain valve even partially open.

1.4 European Community (CE) Specific Information

The European Community (CE) has established certain specific standards regarding equipment of this type. Whenever a conflict exists between CE and non-CE standards, the information or instructions concerned are identified by means of shadowed boxes similar to the one below.

Non-CE Standard for Incoming Gas Pressures

Type	Minimum	Maximum
Natural	6" W.C. 1.49 kPa 14.68 mbar	14" W.C. 3.49 kPa 34.72 mbar
LP	11" W.C. 2.74 kPa 27.28 mbar	14" W.C. 3.49 kPa 34.84 mbar

1.5 Equipment Description

H50 Series high-efficiency gas fryers employ a unique infrared burner system that uses up to 43% less energy to cook the same volume as conventional fryers. Models in this series include MJH50, FMH50, and FPH50 variants. MJH50 variants have no built-in filtration system. FMH50 variants have a built-in Filter Magic II filtration system. The Filter Magic system is housed in its own cabinet, which may be attached to either side of a fryer and which can be located anywhere in a battery of fryers. The FPH50 variants have a built-in FootPrint III filtration system that is located underneath the fryer to conserve floor space. (In batteries of fryers, the FootPrint III system is always located under the leftmost two fryers.)
All H50 Series fryers are of an open-pot design with no tubes and have a hand-sized opening into the deep cold zone, which makes cleaning the stainless frypot quick and easy.

Heating is supplied by a pair of infrared burner assemblies mounted on each side of the frypot. Combustion air for the burners is supplied by a dedicated blower mounted on the front of the frypot. H50 Series fryers can be configured for natural gas, propane (LP), or manufactured gas, as required by the customer.

Each frypot is equipped with a temperature probe for precise temperature control.

All H50 Series fryers come standard with electronic ignition, melt cycle, and boil-out mode. Control options include Computer Magic III computers, solid-state (analog) controllers, digital controllers, and basket lift timers.

All fryers in this series require an external source of AC electrical power. Units can be configured for voltages ranging from 120 VAC to 220 VAC.

Fryers equipped with FootPrint III built-in filtration systems are shipped completely assembled. Fryers without the FootPrint III require installation of legs or optional casters at point of use. All fryers are shipped with a package of standard accessories. Each fryer is adjusted, tested, and inspected at the factory before crating for shipment.

1.6 Installation, Operating, and Service Personnel

Operating information for Frymaster equipment has been prepared for use by qualified and/or authorized personnel only, as defined in Section 1.7. **All installation and service on Frymaster equipment must be performed by qualified, certified, licensed, and/or authorized installation or service personnel, as defined in Section 1.7.**

1.7 Definitions

QUALIFIED AND/OR AUTHORIZED OPERATING PERSONNEL

Qualified/authorized operating personnel are those who have carefully read the information in this manual and have familiarized themselves with the equipment functions, or who have had previous experience with the operation of the equipment covered in this manual.

QUALIFIED INSTALLATION PERSONNEL

Qualified installation personnel are individuals, firms, corporations, and/or companies which, either in person or through a representative, are engaged in and are responsible for the installation of gas-fired appliances. Qualified personnel must be experienced in such work, be familiar with all gas precautions involved, and have complied with all requirements of applicable national and local codes.

QUALIFIED SERVICE PERSONNEL

Qualified service personnel are those who are familiar with Frymaster equipment and who have been authorized by Frymaster, L.L.C. to perform service on the equipment. All authorized service personnel are required to be equipped with a complete set of service and parts manuals, and to stock a minimum amount of parts for Frymaster equipment. A list of Frymaster Factory Authorized Service Centers (FASC) is included with the fryer when shipped from the factory. ***Failure to use qualified service personnel will void the Frymaster warranty on your equipment.***

1.8 Shipping Damage Claim Procedure

Your Frymaster equipment was carefully inspected and packed before leaving the factory. The transportation company assumes full responsibility for safe delivery upon its acceptance of the equipment for transport.

What to do if your equipment arrives damaged:

1. **File a claim for damages immediately**, regardless of the extent of damages.
2. **Inspect for and record all visible loss or damage**, and ensure that this information is noted on the freight bill or express receipt and is signed by the person making the delivery.
3. **Concealed loss or damage** that was unnoticed until the equipment was unpacked should be recorded and reported to the freight company or carrier **immediately** upon discovery. A concealed damage claim must be submitted within 15 days of the date of delivery. Ensure that the shipping container is retained for inspection.

Frymaster **DOES NOT ASSUME RESPONSIBILITY FOR DAMAGE OR LOSS INCURRED IN TRANSIT.**

H50 SERIES GAS FRYER
CHAPTER 2: INSTALLATION INSTRUCTIONS

2.1 General Installation Requirements

Qualified, licensed, and/or authorized installation or service personnel, as defined in Section 1.7 of this manual, should perform all installation and service on Frymaster equipment.

Conversion of this appliance from one type of gas to another should only be performed by qualified, licensed, and/or authorized installation or service personnel as defined in Section 1.7 of this manual.

Failure to use qualified, licensed, and/or authorized installation or service personnel (as defined in Section 1.7 of this manual) to install, convert to another gas type or otherwise service this equipment will void the Frymaster warranty and may result in damage to the equipment or injury to personnel.

Where conflicts exist between instructions and information in this manual and local or national codes or regulations, installation and operation shall comply with the codes or regulations in force in the country in which the equipment is installed.

⚠ DANGER
Building codes prohibit a fryer with its open tank of hot oil/shortening being installed beside an open flame of any type, including those of broilers and ranges.

Upon arrival, inspect the cooker carefully for visible or concealed damage. (See **Shipping Damage Claim Procedure** in Chapter 1.)

⚠ DANGER
Frymaster appliances equipped with legs are for stationary installations. Appliances fitted with legs must be lifted during movement to avoid damage to the appliance and bodily injury. For movable installations, optional equipment casters must be used. Questions? Call 1-800-551-8633.

CLEARANCE AND VENTILATION

The fryer(s) must be installed with a 6” (150 mm) clearance at both sides and back when installed adjacent to combustible construction; no clearance is required when installed adjacent to noncombustible construction. A minimum of 24” (600 mm) clearance should be provided at the front of the fryer.

⚠ DANGER
No structural material on the fryer should be altered or removed to accommodate placement of the fryer under a hood. Questions? Call the Frymaster/Dean Service Hotline at 1-800-551-8633.

One of the most important considerations of efficient fryer operation is ventilation. Make sure the fryer is installed so that products of combustion are removed efficiently, and that the kitchen ventilation system does not produce drafts that interfere with burner operation.

The fryer flue opening must not be placed close to the intake of the exhaust fan, and the fryer must never have its flue extended in a "chimney" fashion. An extended flue will change the combustion characteristics of the fryer, causing longer recovery time. It also frequently causes delayed ignition. To provide the airflow necessary for good combustion and burner operation, the areas surrounding the fryer front, sides, and rear must be kept clear and unobstructed.

⚠ DANGER

This appliance must be installed with sufficient ventilation to prevent the occurrence of unacceptable concentrations of substances harmful to the health of personnel in the room in which it is installed.

Fryers must be installed in an area with an adequate air supply and adequate ventilation. Adequate distances must be maintained from the flue outlet of the fryer to the lower edge of the ventilation filter bank. Filters should be installed at an angle of 45º. Place a drip tray beneath the lowest edge of the filter. For U.S. installation, NFPA standard No. 96 states, "A minimum distance of 18 in. (450 mm) should be maintained between the flue outlet and the lower edge of the grease filter." *Frymaster recommends that the minimum distance be 24 in. (600 mm) from the flue outlet to the bottom edge of the filter when the appliance consumes more than 120,000 BTU per hour*.

For installations in the United States, information on construction and installation of ventilating hoods can be found in the NFPA standard cited above. A copy of the standard may be obtained from the National Fire Protection Association, Battery March Park, Quincy, MA 02269.

NATIONAL CODE REQUIREMENTS

The type of gas for which the fryer is equipped is stamped on the data plate attached to the inside of the fryer door. Connect a fryer stamped "NAT" only to natural gas, those stamped "PRO" only to propane gas, and those stamped "MFG" only to manufactured gas.

Installation shall be made with a gas connector that complies with national and local codes, and, where applicable, CE codes. Quick-disconnect devices, if used, shall likewise comply with national, local, and, if applicable, CE codes.

ELECTRICAL GROUNDING REQUIREMENTS

All electrically operated appliances must be grounded in accordance with all applicable national and local codes, and, where applicable, CE codes. A wiring diagram is located on the inside of the fryer door. Refer to the rating plate on the inside of the fryer door for proper voltages.

⚠ DANGER

This appliance is equipped with a three-prong (grounding) plug for your protection against electrical shock, and must be plugged directly into a properly grounded three-prong receptacle. Do not cut, remove, or otherwise bypass the grounding prong on this plug!

⚠ DANGER
This appliance requires electrical power for operation. Place the gas control valve in the OFF position in case of a prolonged power outage. Do not attempt to operate this appliance during a power outage.

AUSTRALIAN REQUIREMENTS

To be installed in accordance with AS 5601 / AG 601, local authority, gas, electricity, and any other relevant statutory regulations.

FCC COMPLIANCE

The user is cautioned that any changes or modifications to Frymaster computers not expressly approved by the party responsible for compliance could void the user's authority to operate the equipment.

Frymaster computers have been tested and found to comply with the limits for a Class A digital device, pursuant to Part 15 of the FCC rules. While these devices are verified as Class A devices, they have been shown to meet the Class B limits. These limits are designed to provide reasonable protection against harmful interference when the equipment is operated in a commercial environment. This equipment generates, uses, and can radiate radio frequency energy and, if not installed and used in accordance with the instruction manual, may cause harmful interference to radio communications. Operation of the equipment in a residential area is likely to cause harmful interference in which case the user will be required to correct the interference at his own expense.

The user may find the booklet "How to Identify and Resolve Radio-TV Interference Problems" helpful. It is prepared by the Federal Communications Commission and is available from the U.S. Government Printing Office, Washington, DC 20402, Stock No. 004-000-00345-4.
If necessary, the user should consult the dealer or an experienced radio and television technician for additional suggestions.

2.2 Caster/Leg Installation

Depending upon the specific configuration ordered, your fryer may have been shipped without installed casters or legs. **DO NOT INSTALL THIS APPLIANCE WITHOUT CASTERS OR LEGS. If the appliance requires the installation of casters or legs, install them in accordance with the instructions included in your accessory package.**

2.3 Pre-Connection Preparations

⚠ DANGER
DO NOT connect this appliance to the gas supply before completing each step in this section.

After the fryer has been positioned under the exhaust hood, ensure the following has been accomplished:

1. Adequate means must be provided to limit the movement of fryers without depending upon the gas line connections. If a flexible gas hose is used, a restraining cable must be connected at all

times when the fryer is in use. The restraining cable and installation instructions are packed with the flexible hose in the accessories box that was shipped with your unit.

2. ***Single unit*** fryers must be stabilized by installing restraining chains on fryers equipped with casters or anchor straps on fryers equipped with legs. Follow the instructions in the accessory pack to install the chains or straps.

⚠ DANGER

Do not attach an apron drainboard to a single fryer. The fryer may become unstable, tip over, and cause injury. The appliance area must be kept free and clear of combustible material at all times.

3. Level fryers equipped with legs by screwing out the legs approximately 1 inch then adjusting them so that the fryer is level and at the proper height in the exhaust hood. Frymaster recommends that the minimum distance from the flue outlet to the bottom edge of the hood be 24 in. (600 mm) when the appliance consumes more than 120,000 BTU per hour. **NOTE:** There are no built-in leveling devices on fryers equipped with casters. The floor where the fryer is to be installed must be level.

4. Test the fryer electrical system:

   a. Plug the fryer electrical cord(s) into a grounded electrical receptacle.
   b. Place the power switch in the **ON** position.

      - For fryers equipped with solid-state (analog) controls, verify that the power and heat lights are lit.
      - For fryers having computer or digital displays, verify that the display indicates CYCL.

   c. Place the fryer power switch in the **OFF** position. Verify that the power and heat lights are out, or that the display is blank.

5. Refer to the data plate on the inside of the fryer door to determine if the fryer burner is configured for the proper type of gas before connecting the fryer quick-disconnect device or piping from the gas supply line.

6. Verify the minimum and maximum gas supply pressures for the type of gas to be used in accordance with the accompanying tables.

CE Standard for Incoming Gas Pressures for Fryers Manufactured After April 1999

Gas	Pressure (mbar)(1)	Orifice Diameter		Regulator Pressure	
		Single Vat	Dual Vat	Single Vat	Dual Vat
G20	20	2 x 3.40	2 x 3.40	7 mbar	7 mbar
G25	20 or 25	2 x 3.40	2 x 3.40	10 mbar	10 mbar
G30	28/30 or 50	2 x 2.05	2 x 2.05	17 mbar	17 mbar
G31	37 or 50	2 x 2.05	2 x 2.05	20 mbar	20 mbar

(1) mbar = 10,2 mm H_2O

CE Standard for Incoming Gas Pressures for Fryers Manufactured Through April 1999

Gas	Pressure (mbar)(1)	Orifice Diameter		Regulator Pressure	
		Single Vat	Dual Vat	Single Vat	Dual Vat
G20	20	2 x 3.40	2 x 3.40	7 mbar	7 mbar
G25	20 or 25	2 x 3.40	2 x 3.40	10 mbar	9 mbar
G30	28/30 or 50	2 x 2.05	2 x 2.05	17 mbar	16,5 mbar
G31	37 or 50	2 x 2.05	2 x 2.05	20,2 mbar	18,5 mbar

(1) mbar = 10,2 mm H_2O

Non-CE Standard for Incoming Gas Pressures		
Gas	**Minimum**	**Maximum**
Natural	6" W.C. 1.49 kPa 14.93 mbar	14" W.C. 3.48 kPa 34.84 mbar
LP	11" W.C. 2.74 kPa 27.37 mbar	14" W.C. 3.48 kPa 34.84 mbar

7. For fryers equipped with a FootPrint III system or basket lifts, plug the electrical cord(s) into a power receptacle behind the fryer.

2.4 Connection to Gas Line

⚠ DANGER

Before connecting new pipe to this appliance, the pipe must be blown out thoroughly to remove all foreign material. Foreign material in the burner and gas controls will cause improper and dangerous operation.

⚠ DANGER

When pressure-testing incoming gas supply lines, disconnect the fryer from the gas line if the test pressure will be ½ PSIG (3.45 kPa, 13.84 inches W.C.) or greater to avoid damage to the fryer's gas tubes and gas valve(s).

⚠ DANGER

All connections must be sealed with a joint compound suitable for the gas being used and all connections must be tested with a solution of soapy water before lighting any pilots.

Never use matches, candles, or any other ignition source to check for leaks. If gas odors are detected, shut off the gas supply to the appliance at the main shut-off valve and immediately contact the local gas company or an authorized service agency for service.

⚠ DANGER

"Dry-firing" your unit will cause damage to the frypot and can cause a fire. Always ensure that melted shortening, cooking oil, or water is in the frypot before firing the unit.

The size of the gas line used for installation is very important. If the line is too small, the gas pressure at the burner manifold will be low. This may cause slow recovery and delayed ignition. The incoming gas supply line should be a minimum of 1½" (38 mm) in diameter. Refer to the chart on the following page for the minimum sizes of connection piping.

Gas Connection Pipe Sizes (Minimum incoming pipe size should be 1 1/2" (41 mm))			
Gas	**Single Unit**	**2 - 3 Units**	**4 or more units***
Natural	3/4" (22 mm)	1" (28 mm)	1 1/4" (36 mm)
Propane	1/2" (15 mm)	3/4" (22 mm)	1" (28 mm)
Manufactured	1" (28 mm)	1 1/4" (36 mm)	1 1/2" (41 mm)

* For distances of more than 20 feet (6 m) and/or more than 4 fittings or elbows, increase the connection by one pipe size.

The H50 Series has received the CE mark for the countries and gas categories indicated in the table below. **NOTE:** The nominal heat input (QN) is 21kW except for AT, DE, LU and category 3P/B, which is 23kW.

CE Approved Gas Categories by Country			
COUNTRIES	**CATEGORIES**	**GAS**	**PRESSURE (MBAR)**
AUSTRIA (AT)	II2H3B/P	G20	20
		G30, G31	50
BELGIUM (BE)	I2E(R)B	G20, G25	20, 25
	I3+	G30, G31	28-30, 37
DENMARK (DK)	II2H3B/P	G20	20
		G30, G31	30
FRANCE (FR)	II2Esi3+	G20, G25	20, 25
		G30, G31	28-30, 37
	II2Esi3P	G20, G25	20, 25
		G31	50
FINLAND (FI)	II2H3B/P	G20	20
		G30, G31	30
GERMANY (DE)	II2ELL3B/P	G20, G25	20
		G30, G31	50
	I3P	G31	50
GREECE (GR)	II2H3+	G20	20
		G30, G31	28-30, 37
ITALY (IT)	II2H3+	G20	20
		G30, G31	28-30, 37
IRELAND (IE)	II2H3+	G20	20
		G30, G31	28-30, 37
LUXEMBOURG (LU)	II2E3B/P	G20	20
		G30, G31	50
NETHERLANDS (NL)	II2L3P	G25	25
		G31	50
	II2L3B/P	G25	25
		G30, G31	30
NORWAY (NO)	I3B/P	G30, G31	30
PORTUGAL (PT)	II2H3+	G20	20
		G30, G31	28-30, 37
SPAIN (ES)	II2H3+	G20	20
		G30, G31	28-30, 37
	II2H3P	G20	20
		G31	37, 50
SWEDEN (SE)	II2H3B/P	G20	20
		G30, G31	30
UNITED KINGDOM (UK)	II2H3+	G20	20
		G30, G31	28-30, 37

CE Standard

Required airflow for the combustion air supply is $2m^3/h$ per kW.

1. Connect the quick-disconnect hose to the fryer quick-disconnect fitting under the front of the fryer and to the building gas line.

   NOTE: Some fryers are configured for a rigid connection to the gas supply line. These units are connected to the gas supply line at the rear of the unit.

   When using thread compound, use very small amounts on male threads only. Use a pipe thread compound that is not affected by the chemical action of LP gases (Loctite™ PST56765 Sealant is one such compound). DO NOT apply compound to the first two threads. Doing so may allow some of the compound to enter the gas stream, resulting in clogging of burner orifices and/or the control valve.

2. Open the gas supply to the fryer and check all piping, fittings, and gas connections for leaks. A soap solution should be used for this purpose.

3. Close the fryer drain valve and fill the frypot with water and boil-out solution to the bottom OIL LEVEL line at the rear of the frypot. Light the fryer and perform the boil-out procedures that are described in the "Lighting Instructions" and "Boiling Out the Frypot" topics found in Chapter 3 of this manual.

⚠ DANGER

"Dry-firing" your unit will cause damage to the frypot and can cause a fire. Always ensure that melted shortening, cooking oil, or water is in the frypot before firing your unit.

4. The burner manifold pressure should be checked at this time by the local gas company or an authorized service agent. The tables below and on the following page list the burner manifold gas pressures for the various gas types that can be used with this equipment.

CE Standard Burner Manifold Gas Pressures for Fryers Manufactured After April 1999

Gas	Pressure (mbar)	
	Single Vat	Dual Vat
Natural Gas Lacq (G20) under 20 mbar	7	7
Natural Gas Groningue * (G25) under 25 mbar	10	10
Natural Gas Groningue (G25) under 20 mbar	10	10
Butane (G30) at 28/30 or 50 mbar	17	17
Propane (G31) under 37 or 50 mbar	20	20

* Belgian G25 = 7,0 mbar (single or dual)

CE Standard Burner Manifold Gas Pressures for Fryers Manufactured Through April 1999

Gas	Pressure (mbar)	
	Single Vat	Dual Vat
Natural Gas Lacq (G20) under 20 mbar	7	6,5
Natural Gas Gronigue * (G25) under 25 mbar	10	9
Natural Gas Gronigue (G25) under 20 mbar	10	9
Butane (G30) at 28/30 or 50 mbar	17	16,5
Propane (G31) under 37 or 50 mbar	20,2	18,5

* Belgian G25 = 7,0 mbar (single) or 6,5 (dual)

Non-CE Standard Burner Manifold Gas Pressures	
Gas	**Pressure**
Natural	3" W.C. 0.73 kPa
Propane	8.25" W.C. 2.5 kPa

5. Check the programmed temperature or solid-state (analog) controller thermostat setting. (Refer to the separate *Frymaster Fryer Controllers User's Manual* furnished with your unit for the setpoint programming instructions for your particular controller.)

2.5 Converting to Another Gas Type

⚠ DANGER

This appliance was configured at the factory for a specific type of gas. Converting from one type of gas to another requires the installation of specific gas-conversion components.

Switching to a different type of gas without installing the proper conversion components may result in fire or explosion. NEVER ATTACH THIS APPLIANCE TO A GAS SUPPLY FOR WHICH IT IS NOT CONFIGURED!

Conversion of this appliance from one type of gas to another should only be performed by qualified, licensed, and authorized installation or service personnel, as defined in Section 1.7 of this manual.

H50 Series Fryers manufactured for Non-CE countries use different burners for each type gas. The burners in fryers built for Propane gas have a special gray-colored coating on the burner tiles to enable them to withstand the higher caloric value of the Propane gas. Burners designed for use in Propane units may be used in natural gas applications, but not vice versa.

Non-CE Gas Conversion Kits	
Natural Gas to Propane (LP) Gas	Propane (LP) Gas to Natural Gas
Full Vat: Part Number 826-1145	Full Vat: Part Number 826-1146
Dual Vat: Part Number 826-1147	Dual Vat: Part Number 826-1148

Units manufactured for export to CE countries are equipped with "universal" burners that may be used with either natural (G20, G25) gas or Butane (G30) and Propane (G31) gasses.

CE Gas Conversion Kits for Units with Gas Valve 810-1011	
G20 or G25 (Natural) to G30 or G31 Gas:	G30 or G31 to G20 or G25 (Natural) Gas:
Part Number 826-1196	Part Number 826-1197

CE GAS CONVERSION INSTRUCTIONS

1. Between G20- and G25-type Natural Gas, adjust the gas pressure at the regulator. (Refer to the CE Standard Burner Manifold Gas Pressure Chart.) Do not change the orifice.

2. Between a 2nd family (G20 or G25) and a 3rd family gas (G30 Butane or G31 Propane):
   a. Change the orifices.
   b. Change the gas valve spring (units with valve part number 810-1011only)
   c. Adjust the manifold pressure.

3. Affix the new label included with the conversion kit next to the existing rating plate stating that the gas type has been converted. Remove any references to the previously used gas from the existing rating plate. Conversion rating label PN 802-2144.

4. If the destination language changes, replace the labels. Call your local service agency or KES for a label kit. The language of reference will be on the corner of the label.

THIS PAGE INTENTIONALLY LEFT BLANK.

H50 SERIES GAS FRYER
CHAPTER 3: OPERATING INSTRUCTIONS

FINDING YOUR WAY AROUND THE H50 SERIES FRYER

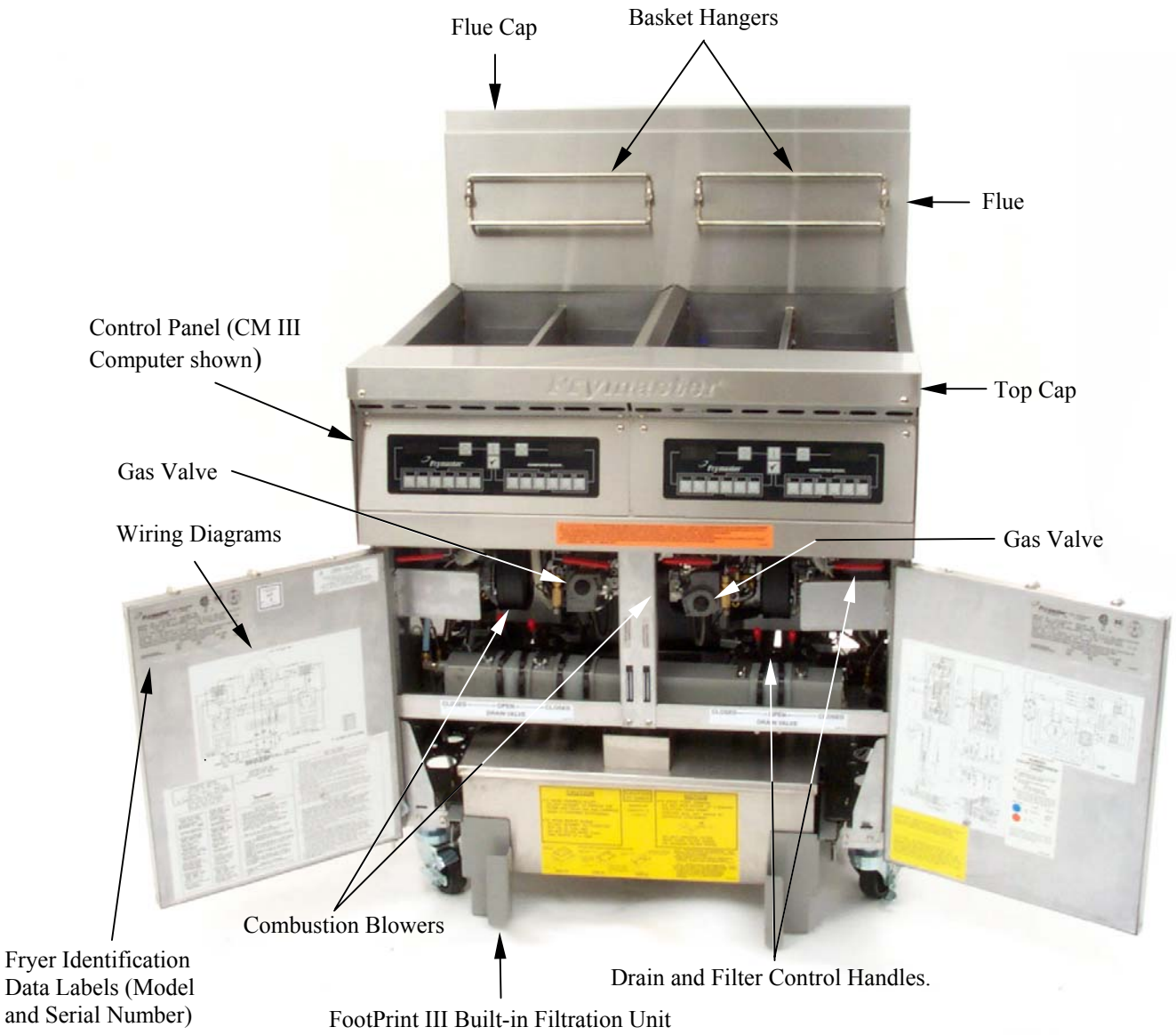

TYPICAL CONFIGURATION (FPH250 SHOWN)

NOTE: The appearance of your fryer may differ slightly from that shown depending upon configuration and date of manufacture.

3.1 Start-Up Procedure

⚠ WARNING

The on-site supervisor is responsible for ensuring that operators are made aware of the inherent hazards of operating a hot oil filtering system, particularly the aspects of oil filtration, draining and cleaning procedures.

⚠ CAUTION

If this is the first time the fryer is being used after installation, refer to Section 3.2, Boil-Out Procedure.

⚠ CAUTION

The cooking oil/shortening capacity of the H50 Series fryer is 50 lbs. (25 liters) at 70ºF (21ºC) for a full-vat and 25 lbs. (12.5 liters) at 70ºF (21ºC) for each half of a dual-vat.

Before lighting the fryer, make sure the fryer is OFF and the frypot drain valve(s) is/are closed. Remove the basket support rack(s), if installed, and fill the frypot to the bottom OIL-LEVEL line.

If solid shortening is being used, make sure it is packed down into the bottom of the frypot.

⚠ WARNING

Never operate this appliance with an empty frypot. The frypot must be filled with water or cooking oil/shortening before lighting the burners. Failure to do so will damage the frypot and may cause a fire.

Lighting the Fryer

1. Press the computer/controller ON/OFF switch to the OFF position.

For Non-CE Fryers

After placing the ON/OFF switch in the OFF position, turn the gas valve knob to the OFF position. Wait 5 minutes, then turn the knob to the ON postion.

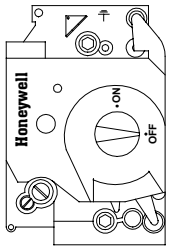

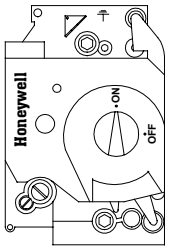

2. Press the computer/controller ON/OFF switch to the ON position and set the thermostat or program the computer for normal cooking temperature.

3. If the burners fail to light, press the ON/OFF switch to the OFF position and wait 60 seconds. Repeat step 2.

4. The fryer will automatically enter the Melt cycle mode if the frypot temperature is below 180ºF (82ºC). (**NOTE:** During the melt cycle, the burners will repeatedly fire for a few seconds, then go out for a longer period.) When the frypot temperature reaches 180ºF (82ºC), the unit will automatically switch to the Heating mode. The burners will remain lit until the frypot temperature reaches the programmed cooking temperature.

5. After the burners have been lit for at least 90 seconds, observe the flames through the burner viewing ports located on each side of the combustion air blower.

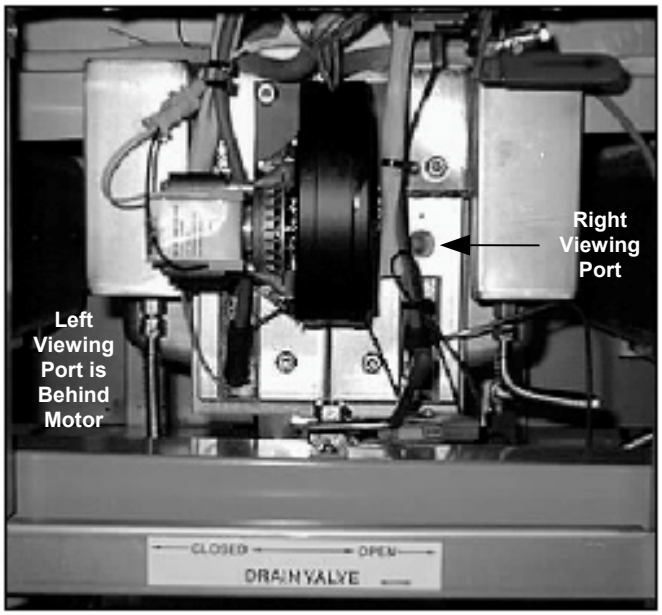

The optimum burn is a bright orange-red glow. If a blue flame is observed, or if there are dark spots on a burner face, the air/gas mix requires adjustment. Adjustment procedures are different for CE and Non-CE units.

Adjusting Air/Gas Mix:
Non-CE Units and CE Units Built After April 1999

On the side of the blower housing opposite the motor is a plate with one or two locking nuts. Loosen the nut(s) enough to allow the plate to be moved, then adjust the position of the plate to open or close the air intake opening until a bright orange-red glow is obtained. Carefully hold the plate in position and tighten the locking nut(s).

Adjusting Air/Gas Mix:
CE Units Built Before May 1999

CE units built before May 1999 are equipped with a shield assembly in front of the blowers. An air shutter plate on the face of the shield assembly regulates the amount of airflow to the blower intake. To adjust the shutter plate, loosen the locking screws and slide the shutter to the left or right as necessary to obtain a bright orange-red glow. Carefully hold the shutter plate in position and tighten the locking screws.

3.2 Boiling Out the Frypot

To ensure that the frypot is free of any contamination resulting from its manufacture, shipping, and handling during installation, the frypot must be boiled out before first use. Frymaster recommends boiling out the frypot each time the oil or shortening is changed.

1. Before lighting the burners, close the fryer drain valve(s) and fill the frypot to the bottom OIL-LEVEL line with a mixture of cold water and automatic dishwasher detergent.

2. For units equipped with a ***Solid State (Analog)*** controller, set the temperature knob to 195°F (91°C)

   For units equipped with a ***Digital Controller***, use the setpoint up/down keys to adjust the set-point to 195°F (91°C)

   For units equipped with a ***Basket Lift Timer***, press the Boil-Mode switch to reset the timer to 195°F (91°C).

   For units equipped with a ***Computer Magic III*** computer,

   - Press the ON/OFF switch followed by the program mode switch . CODE will appear in the left display.
   - Enter the code number 1653. The right display will read BOIL. The temperature is automatically set for 195°F (91°C). The fryer will attain this temperature and remain there until the ON/OFF switch is pressed, which cancels the boil-out mode.

3. Place the fryer into operation in accordance with Section 3.1 and simmer the solution for 1 hour.

⚠ DANGER
Never leave the fryer unattended during the boil-out process. If the boil-out solution boils over, turn off power to the fryer immediately and let the solution cool for a few minutes before resuming the process.

4. After the solution simmers for 1 hour, turn the fryer off, allow the solution to cool, then add 2 gallons (7.75 liters) of cold water and stir. Drain the solution into a suitable container and clean the frypot thoroughly.

⚠ WARNING

Do not drain boil-out solution into a shortening disposal unit, a built-in filtration unit, or a portable filter unit. These units are not intended for this purpose, and will be damaged by the solution.

5. Rinse the frypot at least twice by filling the frypot with clean water and draining. Dry the frypot thoroughly with a clean, dry towel.

⚠ DANGER

Remove all drops of water from the frypot before filling with cooking oil or shortening. Failure to do so will cause spattering of hot liquid when the oil or shortening is heated to cooking temperature and may cause injury to nearby personnel.

3.3 Shutting the Fryer Down

For short-term shut down during the workday, place the controller ON/OFF switch in the **OFF** position and put the frypot covers in place (if the fryer is so equipped).

When shutting the fryers down at closing time, place the controller ON/OFF switch in the **OFF** position.

For Non-CE Fryers

After placing the ON/OFF switch in the OFF position, turn the gas valve knob to the OFF position.

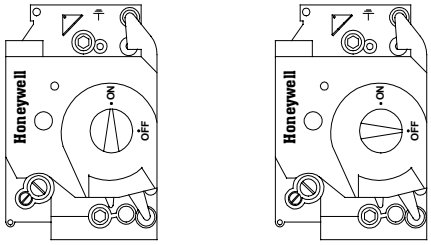

Put the frypot covers in place (if the fryer is so equipped).

3.4 Controller Operation and Programming

Fryers in the H50 Series can be equipped with any of the following controlling devices:

- Computer Magic III
- Solid State (Analog) Controller
- Digital Controller
- Basket Lift Timer

Refer to the appropriate section of the separate Frymaster Fryer Controllers User's Manual for the operating instructions for your specific controller.

THIS PAGE INTENTIONALLY LEFT BLANK.

H50 SERIES GAS FRYERS
CHAPTER 4: FILTRATION INSTRUCTIONS

⚠ WARNING
The on-site supervisor is responsible for ensuring that operators are made aware of the inherent hazards of operating a hot oil filtering system, particularly the aspects of oil filtration, draining and cleaning procedures.

4.1 Draining and Manual Filtering

⚠ DANGER
Draining and filtering of cooking oil or shortening must be accomplished with care to avoid the possibility of a serious burn caused by careless handling. The oil to be filtered is at or near 350°F (177°C). Ensure all hoses are connected properly and drain handles are in their proper position before operating any switches or valves. Wear all appropriate safety equipment when draining and filtering cooking oil or shortening.

⚠ DANGER
Allow oil/shortening to cool to 100°F (38°C) before draining into an appropriate container for disposal.

⚠ DANGER
Do not drain more than one frypot at a time into the built-in filtration unit to avoid overflow and spillage of hot oil/shortening.

⚠ DANGER
When draining oil/shortening into a disposal unit or portable filter unit, do not fill above the maximum fill line located on the container.

If your fryer is not equipped with a built-in filtration system (FootPrint III or Filter Magic II), the cooking oil or shortening must be drained into another suitable container. (For safe, convenient draining and disposal of used cooking oil or shortening, Frymaster recommends using the Frymaster Shortening Disposal Unit (SDU). The SDU is available through your local distributor.)

1. Turn the fryer power switch to the **OFF** position. Screw the drainpipe (provided with your fryer) into the drain valve. Make sure the drainpipe is firmly screwed into the drain valve and that the opening is pointing down.

2. Position a metal container with a sealable cover under the drainpipe. The metal container must be able to withstand the heat of the cooking oil/shortening and hold hot liquids. If you intend to reuse the oil or shortening, Frymaster recommends that a Frymaster filter cone holder and filter cone be used when a filter machine is not available. If you are using a Frymaster filter cone holder, be sure that the cone holder rests securely on the metal container.

3. Open the drain valve slowly to avoid splattering. If the drain valve becomes clogged with food particles, use the Fryer's Friend (poker-like tool) to clear the blockage.

⚠ DANGER

NEVER attempt to clear a clogged drain valve from the front of the valve! Hot oil or shortening will rush out creating the potential for severe burns.

DO NOT hammer on the drain valve with the cleanout rod or other objects. Damage to the ball inside will result in leaks and will void the Frymaster warranty.

4. After draining the oil/shortening, clean all food particles and residual oil/shortening from the frypot. BE CAREFUL, this material may still cause severe burns if it comes in contact with bare skin.

4. Close the drain valve securely and fill the frypot with clean, filtered or fresh cooking oil or solid shortening to the bottom OIL-LEVEL line.

⚠ DANGER

When using solid shortening, pack the shortening down into the bottom of the frypot. DO NOT operate the fryer with a solid block of shortening sitting in the upper portion of the frypot. This will cause damage to the frypot and may cause a flash fire.

4.2 Built-In Filtration System Operation

Both the FootPrint III (FP III) and Filter Magic II (FM II) filtration systems allow the cooking oil or shortening in one frypot to be safely and efficiently filtered while the other frypots in a battery remain in operation. Although different in design and appearance, the operation of the FootPrint III and Filter Magic II systems is identical. Operation of the FootPrint III system is illustrated in this discussion, but the steps described apply equally to the Filter Magic II system.

Most reported problems with these systems have been found to be caused by improper operation. Careful attention to the step-by-step instructions that follow will ensure that your system operates as intended.

PREPARING THE FILTER UNIT FOR USE

1. Pull the filter unit from the cabinet, open the cover, remove the crumb tray, and remove the paper hold-down ring.

2. Remove used filter paper if present, and clean the pan as necessary. Verify that the metal filter screen is in the bottom of the pan, and then lay a clean sheet of filter paper over the top of the pan, overlapping on all sides.

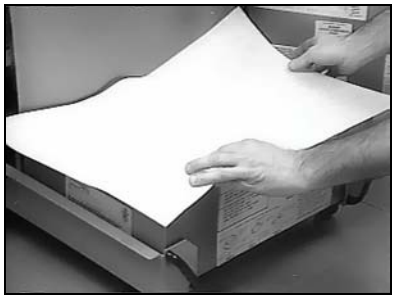

3. Position the hold-down ring over the filter paper and lower the ring into the pan, allowing the paper to fold up around the ring as it is pushed to the bottom of the pan.

4. Sprinkle filter powder over the filter paper. (For powder quantity, see the filter powder manufacturer's instructions.) Replace the crumb tray in the filter pan and close the cover.

5. Push the filter pan back into the fryer, positioning it all the way to the back of the cabinet. (When the FM II filter assembly is properly positioned, the green HEATER ON indicator will light.)

OPERATION OF THE FILTER UNIT

⚠ CAUTION
Never operate the filter unit unless the cooking oil in the fryers has been brought up to cooking temperature.

1. To filter the cooking oil, turn the fryer power **OFF**, then open the drain valve on the fryer you have selected to be filtered. If necessary, use the ***Fryer's Friend*** steel rod to clear the drain from **inside** the frypot.

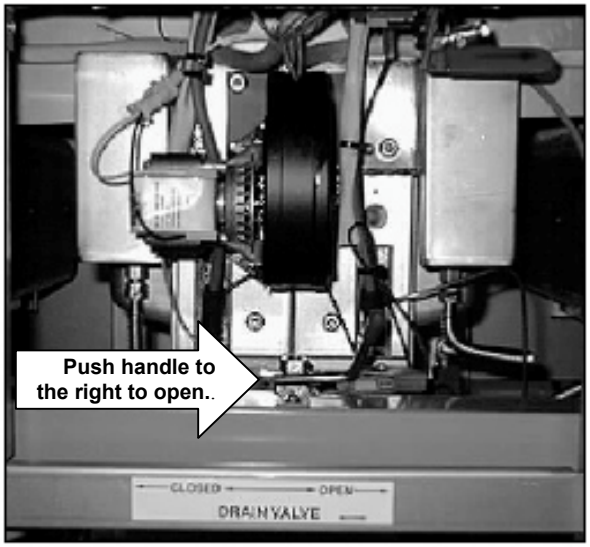

⚠ DANGER
NEVER attempt to clear a clogged drain valve from the front of the valve! Hot oil or shortening will rush out creating the potential for severe burns.

DO NOT hammer on the drain valve with the cleanout rod or other objects. Damage to the ball inside will result in leaks and will void the Frymaster warranty.

⚠ DANGER
Do not drain more than one frypot at a time into the built-in filtration unit to avoid overflow and spillage of hot oil/shortening.

2. When the frypot is empty, use a scouring tool to remove sediment on the sides of the frypot.

⚠ WARNING
When cleaning the inside of the frypot, avoid striking the high limit thermostat and temperature probe or operating thermostat.

3. Snap the Power Shower into the frypot.

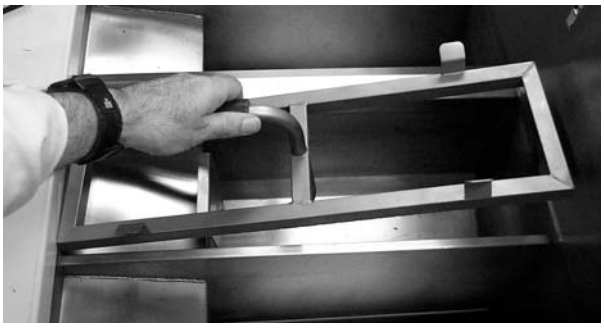

⚠ DANGER

DO NOT operate the filter without the Power Shower in place unless unit is configured with a rear flush option. Hot oil will spray out of the fryer and may cause injury.

4. After all oil has drained from the pot, push the filter handle down and to the rear to start the pump and begin the filtering process. (For units equipped with a rear-flush option, position the control lever to either the Power Shower or Rear Flush position.) There may be a slight delay before the pump activates.

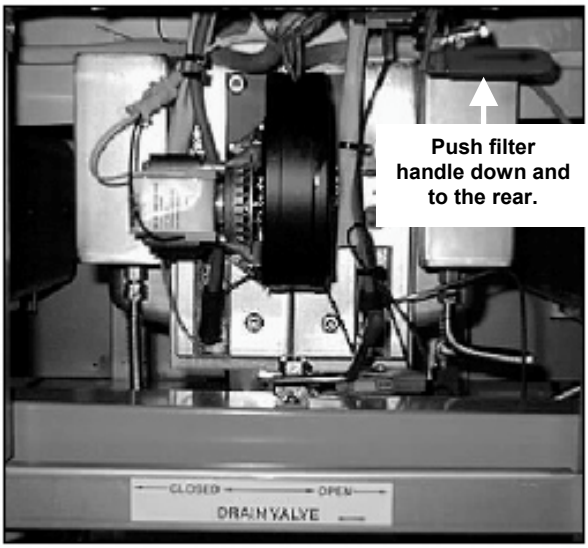

5. After the oil is filtered, close the drain valve and allow the fryer to refill. Let the filter run 10 to 12 seconds after bubbles appear in the oil to clear the lines and prevent hardening of shortening in the lines.

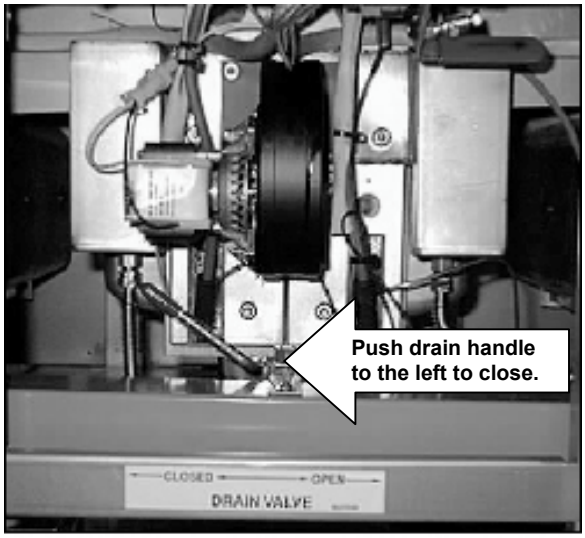

⚠ WARNING

The filter pump is equipped with a manual reset switch in case the filter motor overheats or an electrical fault occurs. If this switch trips, turn off power to the filter system and allow the pump motor to cool 20 minutes before attempting to reset the switch.

6. When the fryer is full, pull the filter handle up and to the front to the off position. (For units equipped with a rear-flush option, position the control lever to the OFF position.) Remove the Power Shower and allow it to drain.

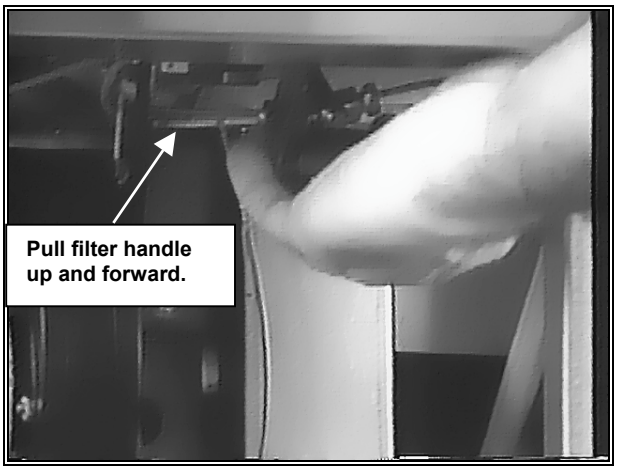

7. Make sure the drain valve is fully closed. (If the drain valve is not fully closed, the controller will display an error message or a trouble light and the fryer will not operate.) Turn the fryer ON and allow the cooking oil/shortening to reach setpoint.

H50 SERIES GAS FRYERS
CHAPTER 5: PREVENTIVE MAINTENANCE

5.1 Fryer Preventive Maintenance Checks and Service

DAILY CHECKS AND SERVICE

Inspect Fryer and Accessories for Damage

Look for loose or frayed wires and cords, leaks, foreign material in frypot or inside cabinet, and any other indications that the fryer and accessories are not ready and safe for operation.

Clean Fryer Cabinet Inside and Out

Clean inside the fryer cabinet with dry, clean cloth. Wipe all accessible metal surfaces and components to remove accumulations of oil or shortening and dust.

Clean the outside of the fryer cabinet with a clean, damp cloth soaked with dishwashing detergent, removing oil/shortening, dust, and lint from the fryer cabinet.

⚠ DANGER
Never attempt to clean fryer during the cooking process or when the frypot is filled with hot oil/shortening. If water comes in contact with oil/shortening heated to cooking temperature, it can cause the oil/shortening to splatter and severely burn nearby personnel.

WEEKLY CHECKS AND SERVICE

Drain and Clean Frypot

During normal usage of your fryer, a deposit of carbonized cooking oil or shortening will gradually form on the inside of the frypot. This deposit must be periodically removed to maintain your fryer's efficiency.

⚠ DANGER
Allow oil/shortening to cool to 100ºF (38ºC) or lower before draining to an appropriate container for disposal.

If your fryer is not equipped with a built-in filtration system, the cooking oil or shortening must be drained into another suitable container. (For safe, convenient draining and disposal of used cooking oil or shortening, Frymaster recommends using our *Shortening Disposal Unit* (SDU). The SDU is available through your local distributor.)

1. Place the fryer power switch in the OFF position. Screw the drainpipe (provided with your fryer) into the drain valve. Make sure the drainpipe is firmly screwed into the drain valve and that the opening is pointing down.

2. Position a Shortening Disposal Unit (SDU) or a metal stock pot with a sealable cover under the drainpipe. (The pot must be able to withstand the heat of the cooking oil/shortening and hold hot liquids.) If you intend to reuse the oil or shortening, Frymaster recommends that our filter cone holder and filter cone be used when a filter machine is not available. If you are using a Frymaster filter cone holder, be sure that the cone holder rests securely on the SDU or pot.

3. Open the drain valve slowly to avoid splattering. If the drain valve becomes clogged with food particles, use the Fryer's Friend cleanout rod to clear the blockage.

⚠ DANGER

DO NOT insert the cleanout rod into the drain from the front to unclog the valve. Hot oil/shortening will rush out, creating an extreme hazard.

DO NOT hammer on the drain valve. This will damage the drain valve ball and prevent the valve from sealing securely, resulting in a leaky valve.

4. After draining the oil/shortening, clean all food particles and residual oil/shortening from the frypot. BE CAREFUL, this material may still cause severe burns if it comes in contact with bare skin.

5. Close the drain valve securely and fill the frypot with a solution of automatic dishwasher detergent and water to the bottom OIL-LEVEL line. (Frymaster recommends the use of Frymaster Boil-Out Solution, available through your local distributor, for best results.)

6. Set the thermostat to 195ºF (91ºC) or program the computer for Boil-Out (see separate *Frymaster Fryer Controllers User's Manual*) and simmer the solution for 1 hour.

⚠ WARNING

Never leave the fryer unattended during this process. If the solution overflows, press the ON/OFF switch to the OFF position immediately.

7. After the solution has simmered for 1 hour, press the ON/OFF switch to the OFF position and allow the solution to cool.

8. Drain the solution into a suitable container **(NOT the built-in filtration system filter pan or the Shortening Disposal Unit)** and thoroughly wipe the frypot with a clean towel.

9. Close the drain valve and fill the frypot with clean, cold water and drain into a suitable container **(NOT the built-in filtration system filter pan or the Shortening Disposal Unit)**. Repeat the rinse process again, and then wipe frypot with a clean, dry towel.

⚠ DANGER

Ensure that the frypot is completely free of water before filling with cooking oil or shortening. When the oil or shortening is heated to cooking temperature, water in the frypot will cause splattering.

Clean Detachable Parts and Accessories

As with the frypot, a deposit of carbonized oil/shortening will accumulate on detachable parts and accessories such as baskets, sediment trays, or fish plates

Wipe all detachable parts and accessories with a clean cloth dampened with a detergent solution. Rinse and thoroughly dry each part.

⚠ WARNING

Use a commercial-grade cleaner formulated to effectively clean and sanitize food-contact surfaces. Read the directions for use and precautionary statements before use. Particular attention must be paid to the concentration of cleaner and the length of time the cleaner remains on the food-contact surfaces.

MONTHLY CHECKS AND SERVICE

Check Calibration of Analog Controller Thermostat Control Knob

(This check applies only to units equipped with Analog Controllers)

1. Insert a good-grade thermometer or pyrometer probe into the oil/shortening, with the end touching the fryer temperature-sensing probe and set the thermostat knob to frying temperature.

2. After the set temperature is reached, let the burner cycle on and off automatically three times to allow the cooking oil/shortening temperature to become uniform. If necessary, stir to get all shortening in the bottom of the frypot melted.

3. When the burner starts for the fourth time, the thermometer/pyrometer reading should be within ± 5ºF (2ºC) of the thermostat knob setting. If it is not, calibrate as follows:

   a. Loosen setscrew in thermostat control knob until the knob will rotate freely on its shaft.

   b. Rotate the knob until the index line on the knob is aligned with the marking that corresponds to the thermometer or pyrometer reading.

   c. Hold the knob and carefully tighten the setscrew.

   d. Recheck the thermometer/pyrometer reading against the thermostat knob setting the next time the burner lights.

   e. Repeat steps 4.a. through 4.d. until the thermometer/pyrometer reading and knob setting agree within ± 5ºF (2ºC). **If calibration cannot be obtained for any reason, call a Factory Authorized Service Center for assistance.**

5. Remove the thermometer or pyrometer.

Check Computer Magic III Set Point Accuracy

(This check applies only to units equipped with Computer Magic III Controllers.)

1. Insert a good-grade thermometer or pyrometer probe into the oil/shortening, with the end touching the fryer temperature-sensing probe.

2. When the computer display shows a series of four dashes "----" with no dot between the first and second dashes (indicating that the frypot contents are within the cooking range), press the switch once to display the temperature of the cooking oil or shortening as sensed by the temperature probe.

3. Press the switch twice to display the set point.

4. Note the temperature on the thermometer or pyrometer. All three readings should be within ± 5ºF (2ºC) of each other. If not, contact a Factory Authorized Service Center for assistance.

QUARTERLY CHECKS AND SERVICE

Clean Combustion Air Blower Assembly

A sheet metal shield or shield assembly prevents inadvertent access to the blower assembly. The specific design varies depending upon the particular configuration of the fryer and the country for which manufactured, but in all cases the shield is attached to the cabinet framing by sheet metal screws. Remove the screws that secure the shield or shield assembly to the cabinet framing and pull the shield out of the fryer to expose the combustion air blower assembly.

1. Disconnect the blower wiring harness and remove the four blower mounting nuts.

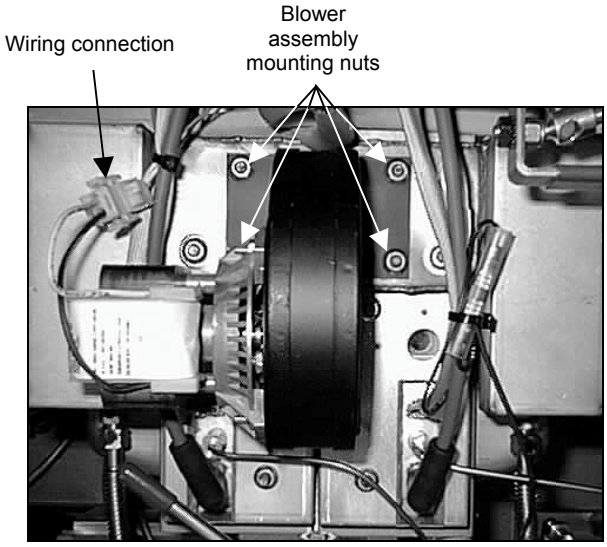

2. Remove the three fasteners that secure the blower motor assembly to the blower housing, and separate the two components.

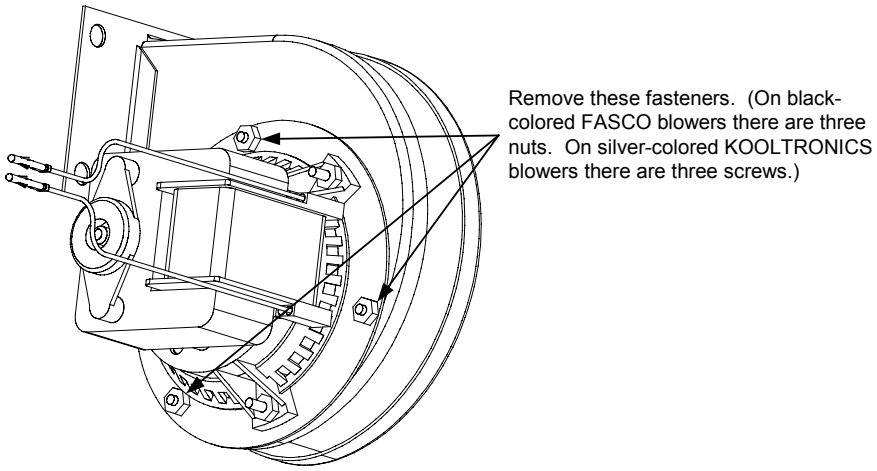

3. Wrap the motor with plastic wrap to prevent water from entering it. Spray degreaser or detergent on the blower wheel and the blower housing. Allow it to soak for five minutes. Rinse the wheel and housing with hot tap water, then dry with a clean cloth.

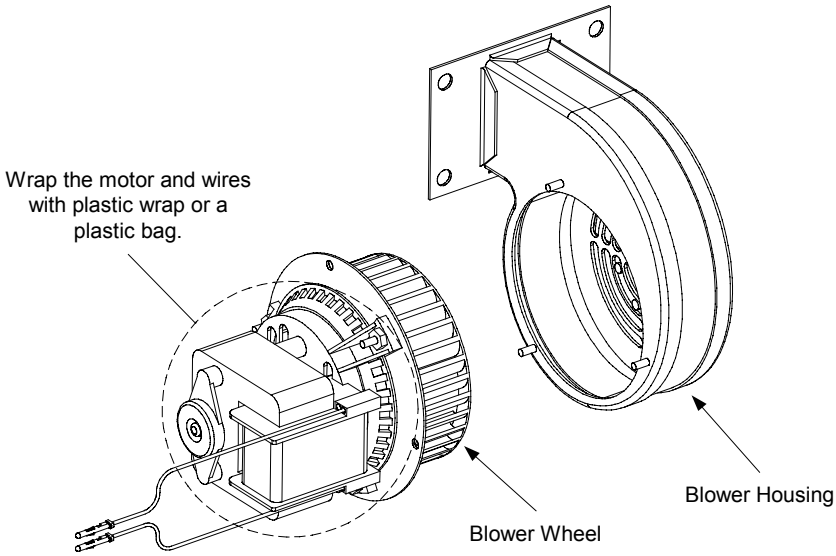

4. Remove the plastic wrap from the blower motor assembly. Reassemble the blower motor assembly and blower housing. Reinstall the blower assembly in the fryer.

5. Reinstall the blower shield or shield assembly.

6. Light the fryer in accordance with the procedure described in Chapter 3, Section 3.1.

7. After the burners have been lit for at least 90 seconds, observe the flames through the burner viewing ports located on each side of the combustion air blower.

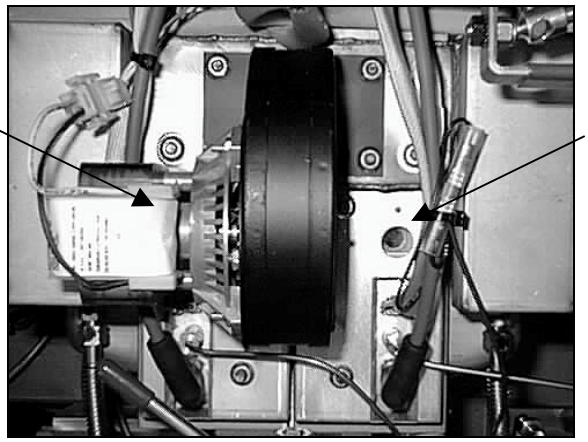

The air/gas mixture is properly adjusted when the burner manifold pressure is in accordance with the applicable table on page 5-8 and the burners display a bright orange-red glow. If a blue flame is observed, or if there are dark spots on a burner face, the air/gas mixture requires adjustment.

Adjusting Air/Gas Mixture
Non-CE Units and CE Units Built After April 1999

On the side of the blower housing opposite the motor is a plate with one or two locking nuts. Loosen the nut(s) enough to allow the plate to be moved, then adjust the position of the plate to open or close the air intake opening until a bright orange-red glow is obtained. Carefully hold the plate in position and tighten the locking nut(s).

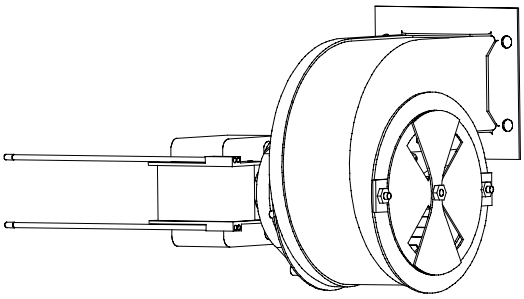

TYPICAL NON-CE BLOWER ASSEMBLY

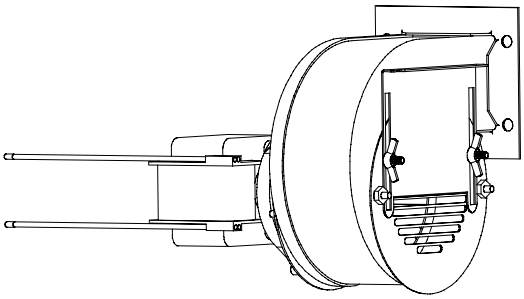

TYPICAL CE BLOWER ASSEMBLY
ON UNITS BUILT AFTER APRIL 1999

Adjusting Air/Gas Mixture
CE Units Built Through April 1999

CE units built through April 1999 are equipped with a shield assembly in front of the blowers. An air shutter plate on the face of the shield assembly regulates the amount of airflow to the blower intake. To adjust the shutter plate, loosen the locking screws and slide the shutter to the left or right as necessary to obtain a bright orange-red glow. Carefully hold the shutter plate in position and tighten the locking screws.

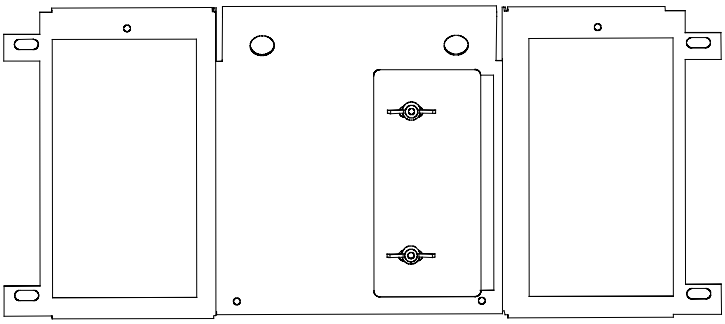

TYPICAL CE BLOWER SHIELD ASSEMBLY
ON UNITS BUILT THROUGH APRIL 1999

SEMI-ANNUAL CHECKS AND SERVICE

Clean Gas Valve Vent Tube

NOTE: This procedure is not required for fryers configured for export to CE countries.

1. Set the fryer power switch and the gas valve to the OFF position.
2. Carefully unscrew the vent tube from the gas valve. **NOTE:** The vent tube may be straightened for ease in removal.
3. Pass a piece of ordinary binding wire (.052 inch diameter) through the tube to remove any obstruction.
4. Remove the wire and blow through the tube to ensure it is clear.
5. Reinstall the tube and bend it so that the opening is pointing downward.

Check Burner Manifold Pressure

⚠ DANGER
This task should be performed by qualified service personnel only. Contact your FASC to arrange this service.

5.2 Built-in Filtration System Preventive Maintenance Checks and Service

⚠ WARNING
Never operate the filter system without cooking oil/shortening in the system.

⚠ WARNING
Never use the filter pan to transport old cooking oil/shortening to the disposal area.

⚠ WARNING
Never drain water into the filter pan. Water will damage the filter pump.

There are no periodic preventive maintenance checks and services required for your FootPrint III or Filter Magic II Filtration Systems other than daily cleaning of the filter pan with a solution of hot water and detergent.

If you notice that the system is pumping slowly or not at all, verify that the filter pan screen is on the bottom of the filter pan, with the paper on top of the screen. Verify that the o-ring(s) are present and in good condition. For FootPrint III units, there is a single o-ring located on the bottom of the filter pan. For Filter Magic II systems, there is an o-ring on the bottom of the pan and two on the fitting at the inside back of the cabinet.

Immediately after each use, drain the Power Shower completely. If oil is leaking at the point where the Power Shower plugs into the frypot, verify that the o-ring and gasket on the connection fitting are present and in good condition. If you suspect blockage, unscrew the clean-out plugs at each corner of the frame. Place the frame in a pan of hot water for several minutes to melt any accumulation of solidified oil/shortening. Use a long, narrow bottlebrush with hot water and detergent to clean inside the tubes. If necessary, insert a straightened paper clip or similarly sized wire into the holes in the frame to remove any solidified shortening or other blockages. Rinse with hot water, dry thoroughly, and reinstall the plugs before using.

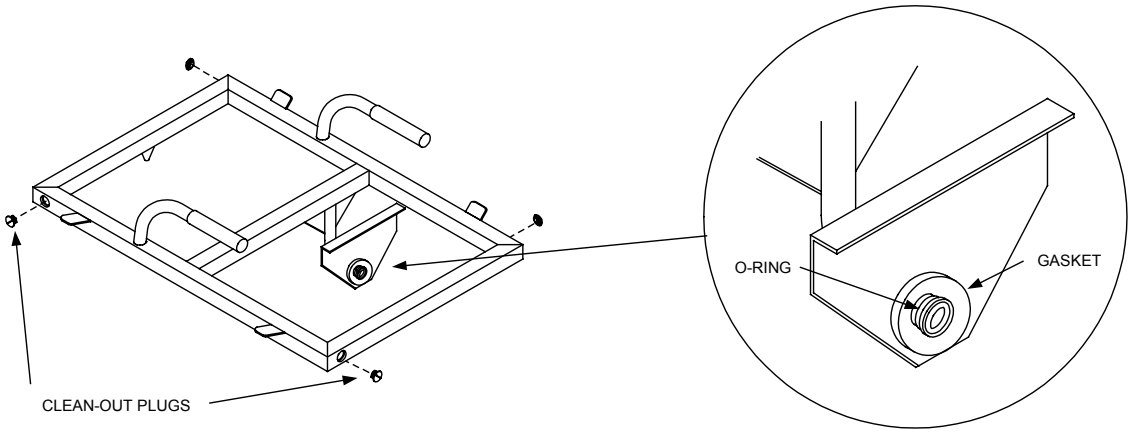

⚠ DANGER
Failure to reinstall the clean-out plugs in the Power Shower will cause hot oil/shortening to spray out of the frypot during the filtering process, creating an extreme burn hazard to personnel.

5.3 Annual/Periodic System Inspection

This appliance should be inspected and adjusted periodically by qualified service personnel as part of a regular kitchen maintenance program.

Frymaster recommends that this appliance be inspected at least annually by a Factory Authorized Service Technician as follows:

Fryer

- Inspect the cabinet inside and out, front and rear for excessive oil build-up and/or oil migration.
- Verify that the flue opening is not obstructed by debris or accumulations of solidified oil or shortening.
- Verify that burners and associated components (i.e. gas valves, pilot assemblies, ignitors, etc.) are in good condition and functioning properly. Inspect all gas connections for leaks and verify that all connections are properly tightened.
- Verify that the burner manifold pressure is in accordance with that specified on the appliance's rating plate.
- Verify that the temperature and high-limit probes are properly connected, tightened and functioning properly, and that probe guards are present and properly installed.
- Verify that component box components (i.e. computer/controller, transformers, relays, interface boards, etc.) are in good condition and free from oil migration build-up and other debris. Inspect the component box wiring and verify that connections are tight and that wiring is in good condition.
- Verify that all safety features (i.e. drain safety switches, reset switches, etc.) are present and functioning properly.
- Verify that the frypot/cookpot is in good condition and free of leaks and that the frypot/cookpot insulation is in serviceable condition.
- Verify that wiring harnesses and connections are tight and in good condition.

Built-In Filtration System

- Inspect all oil-return and drain lines for leaks and verify that all connections are tight.
- Inspect the filter pan for leaks and cleanliness. If there is a large accumulation of crumbs in the crumb basket, advise the owner/operator that the crumb basket should be emptied into a fireproof container and cleaned daily.
- Verify that all O-rings and seals (including those on the Power Shower and on the Filter Magic quick-disconnect fitting) are present and in good condition. Replace o-rings and seals if worn or damaged.

- Check filtration system integrity as follows:

  - With the filter pan empty, place each oil return handle, one at a time, in the ON position. Verify that the pump activates and that bubbles appear in the cooking oil/shortening (or that gurgling is heard from the Power Shower port) of the associated frypot..

  - Close all oil return valves (i.e., place all oil return handles in the OFF position). Verify proper functioning of each oil return valve by activating the filter pump using the lever on one of the oil return handle microswitches. No air bubbles should be visible in any frypot (or no gurgling should be heard from the Power Shower ports).

  - Verify that the filter pan is properly prepared for filtering, then drain a frypot of oil heated to 350°F (177°C) into the filter pan and close the frypot drain valve. Place the oil return handle in the ON position. Allow all cooking oil/shortening to return to the frypot (indicated by bubbles in the cooking oil/shortening or, on units with Power Showers, cessation of oil flow from the Power Shower). Return the oil return handle to the OFF position. The frypot should have refilled in no more than 2 minutes and 30 seconds.

H50 SERIES GAS FRYERS
CHAPTER 6: OPERATOR TROUBLESHOOTING

6.1 Introduction

This chapter provides an easy reference guide to some of the common problems that may occur during the operation of your equipment. The troubleshooting guides that follow are intended to help you correct, or at least accurately diagnose, problems with your equipment. Although the chapter covers the most common problems reported, you may encounter problems that are not covered. In such instances, the Frymaster Technical Services staff will make every effort to help you identify and resolve the problem.

When troubleshooting a problem, always use a process of elimination starting with the simplest solution and working through to the most complex. Most importantly, always try to establish a clear idea of why a problem has occurred. Part of your corrective action involves taking steps to ensure that it doesn't happen again. If a controller malfunctions because of a poor connection, check all other connections while you're at it. If a fuse continues to blow, find out why. Always keep in mind that failure of a small component may often be indicative of potential failure or incorrect functioning of a more important component or system.

Some of the troubleshooting actions recommended in this chapter involve removing suspect components and substituting components that are known to be good. Whenever this in indicated, refer to Sections 6.7 for specific instructions

If you are in doubt as to the proper action to take, do not hesitate to call the Frymaster Technical Service Department or your local Frymaster Factory Authorized Service Center for assistance.

Before calling a servicer or the Frymaster HOTLINE (1-800-551-8633):

- **Verify that electrical cords are plugged in and that circuit breakers are on.**
- **Verify that gas line quick-disconnects are properly connected.**
- **Verify that any gas line cutoff valves are open.**
- **Verify that frypot drain valves are fully closed.**

⚠ DANGER

Hot cooking oil/shortening will cause severe burns. Never attempt to this appliance when filled with hot cooking oil/shortening or to transfer hot cooking oil/shortening from one container to another.

⚠ DANGER

This equipment should be unplugged when servicing, except when electrical circuit tests are required. Use extreme care when performing such tests.

This appliance may have more than one electrical power supply connection point. Disconnect all power cords before servicing.

Inspection, testing, and repair of electrical components should be performed by an authorized service agent only.

6.2 Troubleshooting Fryers with Computer Magic III, Basket Lift Timer, or Digital Controller

PROBLEM	PROBABLE CAUSES	CORRECTIVE ACTION
No display on computer or controller.	A. Controller not turned on.	A. Press the ON/OFF switch to turn the controller on.
	B. No power to fryer.	B. Verify that the fryer is plugged in and that the circuit breaker is not tripped.
	C. Damaged computer/controller wiring harness.	C. If available, substitute a harness known to be good for the suspect harness. If the fryer functions correctly, order replacement harness from FASC.
	D. Failed computer/controller.	D. If available, substitute a computer/controller known to be working for the suspect computer/controller. If the fryer functions correctly, order replacement from FASC.
Display shows Prob with alarm sounding.	Damaged computer/controller wiring harness or connector.	If available, substitute a harness known to be good for the suspect harness. If the fryer functions correctly, order replacement harness from FASC.
Display shows HELP with alarm sounding. Heating indicator is on, but burners will not light.	A. Drain valve not fully closed.	A. Press the ON/OFF switch off, close the drain valve(s) completely, then press the ON/OFF switch on.
	B. Gas valve is not turned on.	B. Turn the gas valve knob to the **ON** position.
	C. Manual gas shut off valve closed.	C. Verify that any in-line manual shut off valve is open. Verify that gas main cut off valve is open.
	D. Improperly connected quick-disconnect fitting on gas line.	D. Verify that the quick-disconnect fitting on the flexible gas line is firmly connected to the fryer.
	E. Obstructed or failed combustion air blower.	Verify that combustion air blower is running. If not, call FASC for service. If combustion air blower is functional, clean and adjust per instructions in Chapter 5 of this manual.

PROBLEM	PROBABLE CAUSES	CORRECTIVE ACTION
Display shows Lo, heating indicator cycles on and off normally, but burners will not light and blower is not running.	A. Failed computer/controller.	A. If available, substitute a computer/controller known to be working for the suspect computer/controller. If the fryer functions correctly, order replacement from FASC.
	B. Damaged computer/controller wiring harness.	B. If available, substitute a harness known to be good for the suspect harness. If the fryer functions correctly, order replacement harness from FASC.
Fryer is slow coming out of melt cycle. Display shows HELP a short time after coming out of melt cycle.	Dirty or obstructed combustion air blower.	Clean and adjust per instructions in Chapter 5 of this manual.
Fryer is operating normally, but recovery is slow when cooking.	Dirty or obstructed combustion air blower.	Clean and adjust per instructions in Chapter 5 of this manual.
Fryer is operating normally, but produces a popping sound when burners ignite.	A. Dirty or obstructed combustion air blower.	A. Clean and adjust per instructions in Chapter 5 of this manual.
	B. Dirty or obstructed gas valve vent tube (non-CE fryers only).	B. Clean per instructions in Chapter 5 of this manual.
	C. Malfunctioning combustion air blower.	C. If blower is slow to come up to speed, contact FASC for service.
Display shows HELP and alarm sounds, but fryer operates normally (false alarm).	Failed computer/controller.	If available, substitute a computer/controller known to be working for the suspect computer/controller. If the fryer functions correctly, order replacement from FASC.
Computer will not go into program mode or some buttons do not actuate.	Failed computer/controller.	If available, substitute a computer/controller known to be working for the suspect computer/controller. If the fryer functions correctly, order replacement from FASC.
Heat indicator is on and blower is running, but burner will not ignite.	Blown fuse on interface board or ignition module.	Replace fuse per instructions in Section 6.6 of this chapter.

PROBLEM	PROBABLE CAUSES	CORRECTIVE ACTION
Heat indicator off upon initial startup. Display shows HI or HOT with alarm sounding.	Failed computer/controller.	If available, substitute a computer/controller known to be working for the suspect computer/controller. If the fryer functions correctly, order replacement from FASC.

6.3 Troubleshooting Fryers with Solid State (Analog) Controller

PROBLEM	PROBABLE CAUSES	CORRECTIVE ACTION
Power switch ON, no lights on controller, fryer does not heat.	A. No power to fryer.	A. Verify that the fryer is plugged in and that the circuit breaker is not tripped.
	B. Damaged controller wiring harness.	B. If available, substitute a harness known to be good for the suspect harness. If the fryer functions correctly, order replacement harness from FASC.
	C. Failed controller.	C. If available, substitute a controller known to be working for the suspect controller. If the fryer functions correctly, order replacement from FASC.
Power light ON, trouble light ON, heating mode light OFF.	Damaged controller wiring harness.	If available, substitute a harness known to be good for the suspect harness. If the fryer functions correctly, order replacement harness from FASC.
Power light ON, trouble light ON, heating mode light ON. Burners do not ignite.	A. Drain valve not fully closed.	A. Press the ON/OFF switch off, close the drain valve(s) completely, then press the ON/OFF switch on.
	B. Gas valve is not turned on.	B. Turn the gas valve knob to the **ON** position.
	C. Manual gas shut off valve closed.	C. Verify that any in-line manual shut off valve is open. Verify that gas main cut off valve is open.
	D. Improperly connected quick-disconnect fitting on gas line.	D. Verify that the quick-disconnect fitting on the flexible gas line is firmly connected to the fryer.
	E. Obstructed or failed combustion air blower.	E. Verify that combustion air blower is running. If not, call FASC for service. If combustion air blower is functional, clean and adjust per instructions in Chapter 5 of this manual.

PROBLEM	PROBABLE CAUSES	CORRECTIVE ACTION
Heating mode light cycles on and off normally. Blower not running and burners will not ignite.	A. Failed controller.	A. If available, substitute a controller known to be working for the suspect controller. If the fryer functions correctly, order replacement from FASC.
	B. Damaged controller wiring harness.	B. If available, substitute a harness known to be good for the suspect harness. If the fryer functions correctly, order replacement harness from FASC.
Fryer is slow coming out of melt cycle. Heating mode light is ON. Trouble light comes on a short time after coming out of melt cycle.	Dirty or obstructed combustion air blower.	Clean and adjust per instructions in Chapter 5 of this manual.
Fryer is operating normally, but recovery is slow when cooking.	Dirty or obstructed combustion air blower.	Clean and adjust per instructions in Chapter 5 of this manual.
Fryer is operating normally, but produces popping sound when burners ignite.	A. Obstructed combustion air blower.	A. Clean and adjust per instructions in Chapter 5 of this manual.
	B. Dirty or obstructed gas valve vent tube (non-CE fryers only).	B. Clean per instructions in Chapter 5 of this manual.
	C. Malfunctioning combustion air blower.	C. If blower is slow to come up to speed, contact FASC for service.
Heating mode light is on and blower is running, but burner will not ignite.	Blown fuse on interface board or ignition module.	Replace fuse per instructions in Section 6.6 of this chapter.
Heating mode light is cycling on and off normally and fryer is operating normally, but trouble light is on continuously (false alarm).	A. Failed controller.	A. If available, substitute a controller known to be working for the suspect controller. If the fryer functions correctly, order replacement from FASC.
	B. Damaged controller wiring harness.	B. If available, substitute a harness known to be good for the suspect harness. If the fryer functions correctly, order replacement harness from FASC.

PROBLEM	PROBABLE CAUSES	CORRECTIVE ACTION
Heating mode light is ON with power switch in OFF position. After initial startup, fryer continues to heat until trouble light comes on. Frypot temperature is above 410F (210°C).	Failed controller.	If available, substitute a controller known to be working for the suspect controller. If the fryer functions correctly, order replacement from FASC.

6.4 Troubleshooting the Built-in Filtration System

PROBLEM	PROBABLE CAUSES	CORRECTIVE ACTION
Pump won't start. **OR** **Pump stops during filtering.**	A. Thermal overload switch has tripped on an overheated motor. ***Test***: If the pump stopped suddenly during the filtering process, especially if after several filtering cycles, the pump motor has probably overheated. Place the filter handle in the OFF position, allow the pump to cool for at least 45 minutes, and then press the reset button on the pump motor. Attempt to activate the pump.	A. If the pump runs normally after resetting the thermal overload switch, the pump was overheated. Always filter with the cooking oil/shortening at or near frying temperature. Allow the pump motor to cool off for about ten minutes after filtering two full frypots one after the other. Check the filter paper between filterings. Replace the paper if there is a large accumulation of sediment.
	B. Failed filter handle microswitch. ***Test***: If this is a multi-pot fryer, attempt to operate the pump using a different handle. If the pump starts, the handle microswitch is either out of alignment or has failed. When the handle is placed in the ON position, the lever on the microswitch should be firmly pressed against the switch. If so, the switch has failed. If not, the switch is loose and/or misaligned.	B. If the switch is loose, tighten the nuts and bolts holding it in place, ensuring that when the handle is placed in the ON position, the lever on the microswitch is pressed firmly against the switch. If the switch has failed, call FASC.

PROBLEM	PROBABLE CAUSES	CORRECTIVE ACTION
(Continued from previous page.)	C. Pump blockage. ***Test***: Close the drain valve. Place the filter handle in the OFF position, allow the pump to cool for at least 45 minutes, and then press the reset button on the pump motor. Pull the filter pan from the unit and then activate the pump. If the pump motor hums and then stops, the pump is blocked.	C. Pump blockages are usually caused by sediment build-up in the pump due to improperly sized or installed filter paper and failure to use the crumb screen. Call FASC to have blockage cleared. Ensure that filter paper is of the proper size and is installed properly, and that the crumb screen is used.
Pump starts, but no transfer takes place or the transfer is very slow.	A. Cooking oil/shortening is too cold for filtering.	A. To properly filter, the oil or shortening should be at or near 350°F (177°C). At temperatures lower than this, the oil/shortening becomes too thick to pass through the filter medium easily, resulting in much slower oil return and eventual overheating of the filter pump motor. Ensure that the cooking oil/shortening is at or near frying temperature before draining into filter pan.
	B. Improperly installed or prepared filter pan components. ***Test***: Close the drain valve. Move the filter handle to the OFF position, pull the filter pan (and Power Shower, if so equipped) from the unit. Move the filter handle to the ON position. If a strong stream of air is being pumped out of the oil return port (or the Power Shower port), the problem is with the filter pan components.	B. Remove the oil from the filter pan and replace the filter paper, ensuring that the filter screen is in place ***under*** the paper. C. If this does not correct the problem, the filter tube suction tube is probably blocked. Remove the blockage using a thin, flexible wire. If unable to remove the blockage, call FASC.
	(Continued on following page.)	

PROBLEM	PROBABLE CAUSES	CORRECTIVE ACTION
(Continued from previous page.)	C. Improperly installed or prepared filter pan components. ***Test***: Close the drain valve. Move the filter handle to the OFF position, pull the filter pan (and Power Shower, if so equipped) from the unit. Move the filter handle to the ON position. If a strong stream of air is being pumped out of the oil return port (or the Power Shower port), the problem is with the filter pan components.	D. Remove the oil from the filter pan and replace the filter paper, ensuring that the filter screen is in place ***under*** the paper. If this does not correct the problem, the filter tube suction tube is probably blocked. Remove the blockage using a thin, flexible wire. If unable to remove the blockage, call FASC.
	D. Improperly installed or prepared filter pan components. ***Test***: Close the drain valve. Move the filter handle to the OFF position, and pull the filter pan (and Power Shower, if so equipped) from the unit. Move the filter handle to the ON position. If a strong stream of air is being pumped out of the oil return port (or the Power Shower port), the problem is with the filter pan components.	D. Verify that filter connection o-rings are present and in good condition. Replace the filter paper, ensuring that the filter screen is properly positioned ***under*** the paper. If using Magnasol filter assembly, verify that o-ring is present and in good condition on filter screen fitting.
Power Shower is not spraying properly.	A. Plugged openings or solidified shortening in the Power Shower. ***Test***: Look for oil/shortening squirting out around the Power Shower gasket but not coming out of the holes around the frame. If so, Power Shower is obstructed.	A. Clean the Power Shower per instructions in Chapter 5 of this manual.
	B. Missing/worn o-rings and gasket on Power Shower.	B. Verify that o-rings and gasket are present and in good condition.
	C. Missing paper in filter pan. (This causes too much pressure in the oil return lines, resulting in a strong flow through the Power Shower, but also squirting of oil from around the gasket.)	C. Verify that filter paper is properly installed in the filter pan.

6.5 Troubleshooting the Basket Lift

PROBLEM	PROBABLE CAUSES	CORRECTIVE ACTION
Basket lift movement is jerky and/or noisy.	Basket lift rods need lubrication.	Lubricate basket lift rods with Lubriplate™ or equivalent light white grease.

6.6 Replacing the Ignition Module Fuse

1. Disconnect the fryer from the electrical supply and remove the two screws in the upper corners of the control panel. Swing the panel open from the top, allowing it to rest on its hinge tabs.

2. Locate the 3-amp ignition module fuse (refer to the illustration below), and using a fuse-puller, remove and replace it with a new fuse.

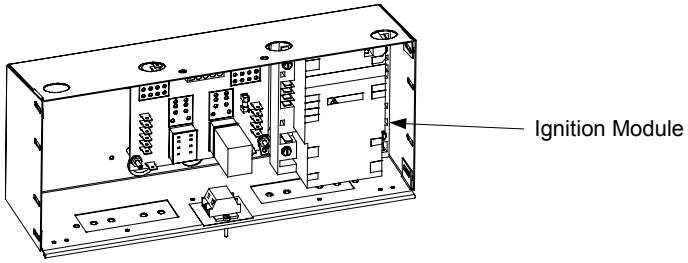

Depending upon when the unit was manufactured, full vat units may have either one or two ignition modules. If there is only one ignition module, the fuse will be mounted on the interface board.

Dual vat units and some full vat units will have two ignigiton modules. Look for the fuse on the left side of the module. If there are no fuses on the modules, the fuse will be on the interface board.

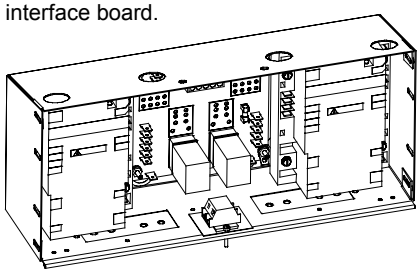

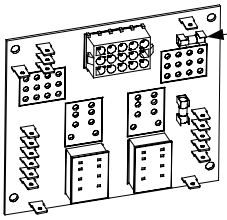

3. Close the panel and replace the control panel screws.

4. Reconnect the fryer to the electrical supply.

6.7 Replacing the Controller or Controller Wiring Harness

1. Disconnect the fryer from the electrical supply and remove the two screws in the upper corners of the control panel. Swing the panel open from the top, allowing it to rest on its hinge tabs.

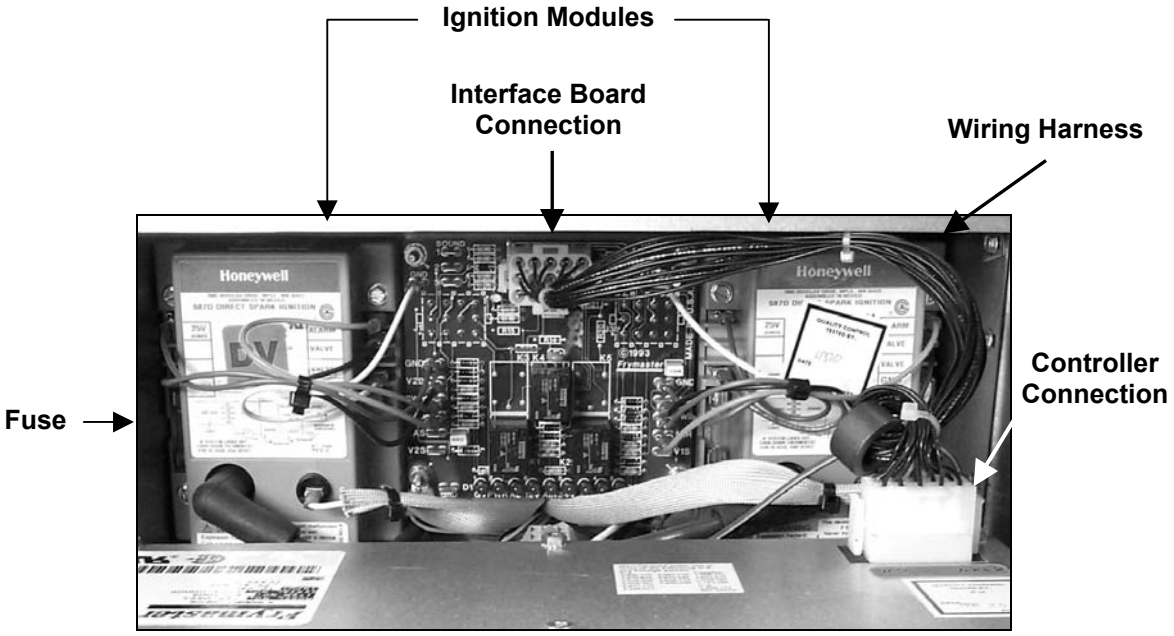

2. Disconnect the wiring harness from the back of the controller and, if replacing the harness, disconnect it from the interface board (see photo on preceding page.

3. Disconnect the ground wire from the controller, and remove the controller by lifting it from the hinge slots in the control panel frame.

4. Reverse the procedure to install a new controller or wiring harness.

THIS PAGE INTENTIONALLY LEFT BLANK.

Frymaster, L.L.C., 8700 Line Avenue, PO Box 51000, Shreveport, Louisiana 71135-1000
Shipping Address: 8700 Line Avenue, Shreveport, Louisiana 71106

TEL 1-318-865-1711 FAX (Parts) 1-318-219-7140 FAX (Tech Support) 1-318-219-7135

SERVICE HOTLINE
1-800-551-8633

PRINTED IN THE UNITED STATES

819-5000
APRIL 2004