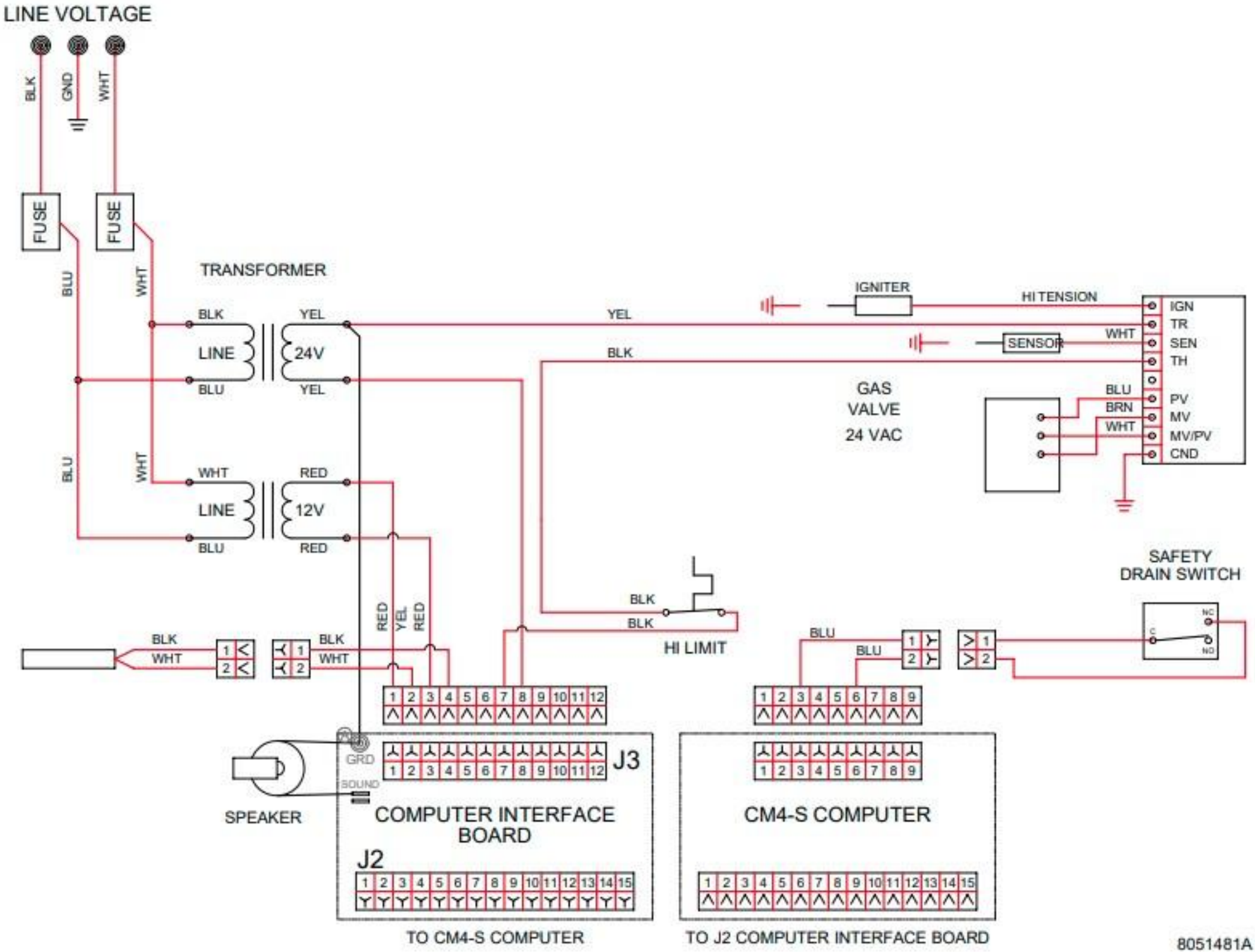
LINE VOLTAGE
BLK
GND
WHT
FUSE
FUSE
BLU
WHT
TRANSFORMER
BLK
YEL
LINE
24V
BLU
YEL
BLU
WHT
WHT
RED
LINE
12V
BLU
RED
IGNITER
HI TENSION
YEL
IGN
TR
WHT
SENSOR
SEN
BLK
TH
GAS
VALVE
24 VAC
BLU
PV
BRN
MV
WHT
MV/PV
CND
SAFETY
DRAIN SWITCH
NC
C
NO
BLK
BLK
HI LIMIT
BLK
WHT
BLK
WHT
RED
YEL
RED
BLU
BLU
1 2 3 4 5 6 7 8 9 10 11 12
1 2 3 4 5 6 7 8 9
GRD
SOUND
J3
SPEAKER
COMPUTER INTERFACE
BOARD
J2
1 2 3 4 5 6 7 8 9 10 11 12 13 14 15
CM4-S COMPUTER
1 2 3 4 5 6 7 8 9 10 11 12 13 14 15
TO CM4-S COMPUTER
TO J2 COMPUTER INTERFACE BOARD
8051481A

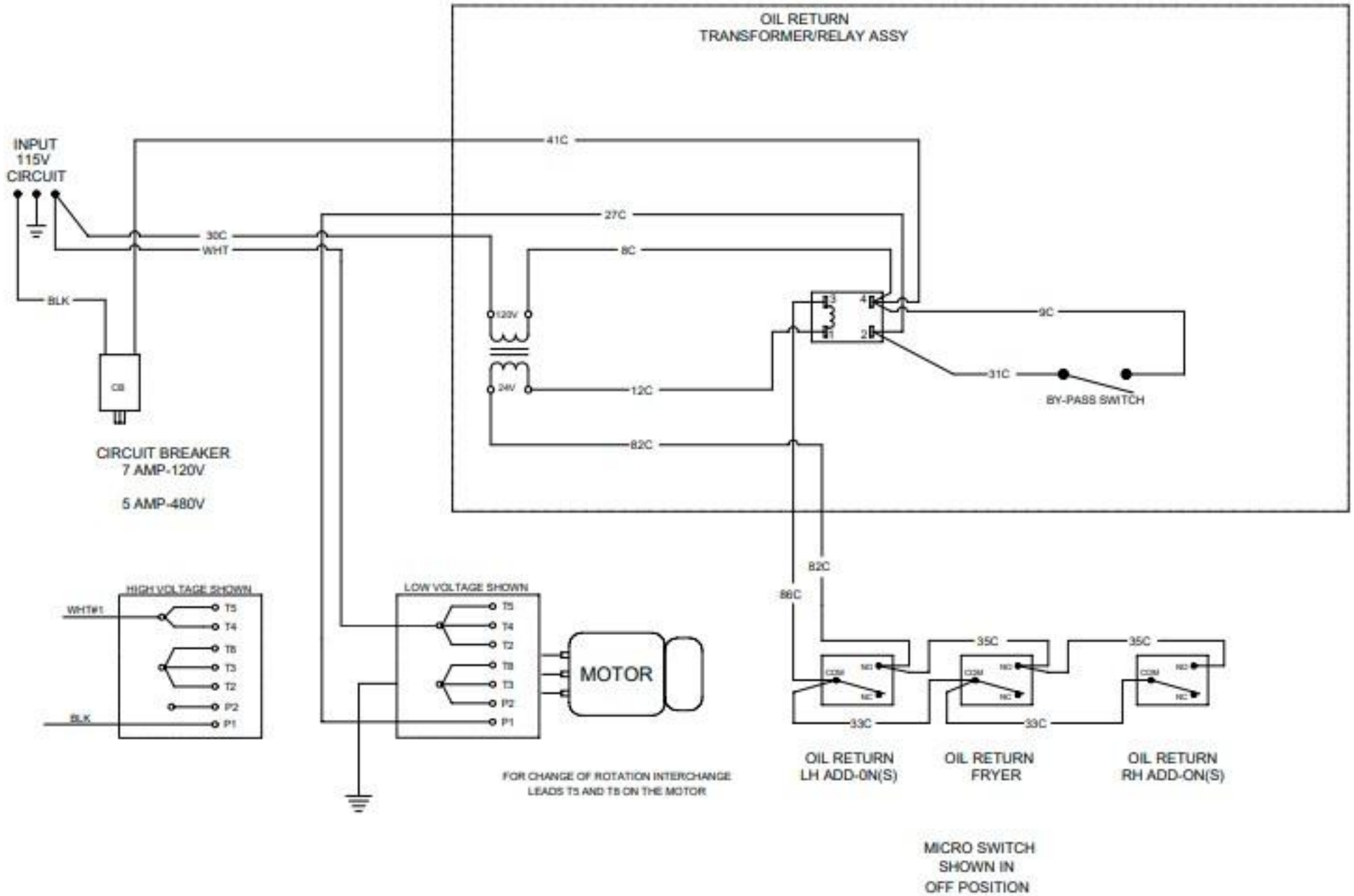
OIL RETURN
TRANSFORMER/RELAY ASSY
INPUT
115V
CIRCUIT
41C
27C
30C
WHT
8C
BLK
120V
24V
9C
31C
12C
BY-PASS SWITCH
82C
CB
CIRCUIT BREAKER
7 AMP-120V
5 AMP-480V
82C
86C
HIGH VOLTAGE SHOWN
WHT#1
T5
T4
T6
T3
T2
P2
P1
BLK
LOW VOLTAGE SHOWN
T5
T4
T2
T6
T3
P2
P1
MOTOR
35C
35C
COM
NO
NC
33C
33C
OIL RETURN
LH ADD-0N(S)
OIL RETURN
FRYER
OIL RETURN
RH ADD-ON(S)
FOR CHANGE OF ROTATION INTERCHANGE
LEADS T5 AND T6 ON THE MOTOR
MICRO SWITCH
SHOWN IN
OFF POSITION

805143