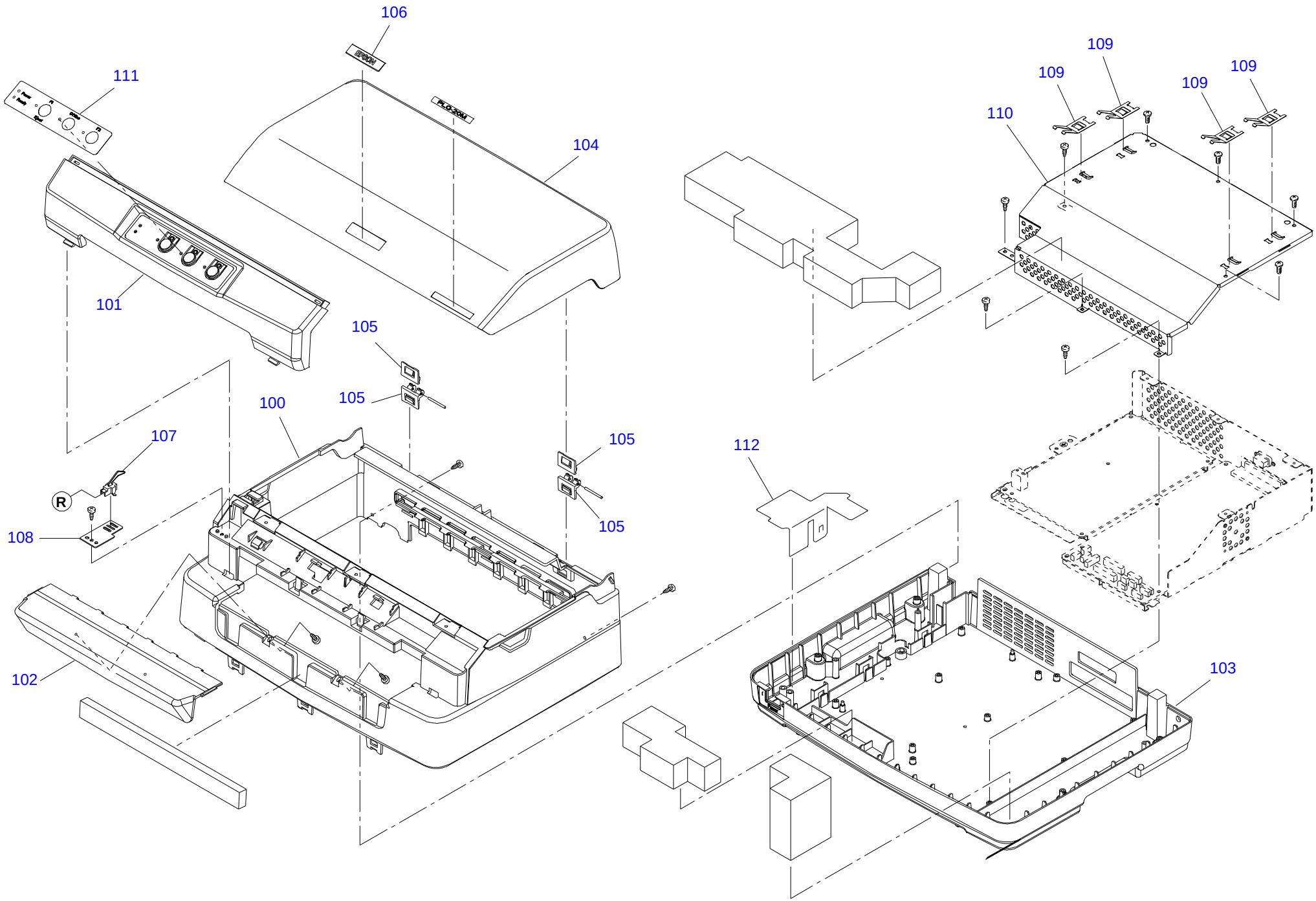

PLQ-20,20K,20D,20C,20CM NO.1 Rev.02 C560-CASE-012

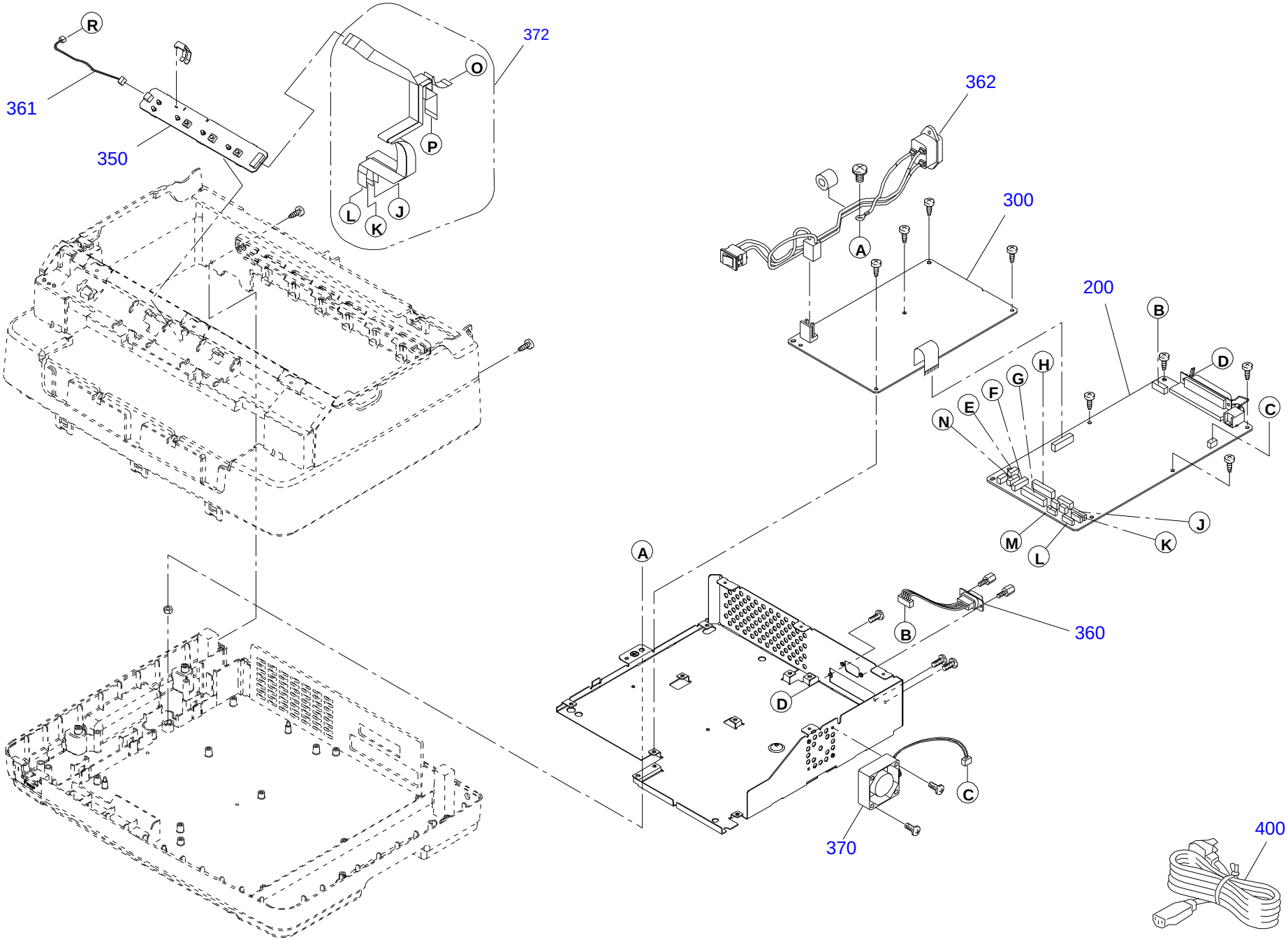

PLQ-20, 20K, 20C, 20CM NO.2 Rev.03 C560-ELEC-013

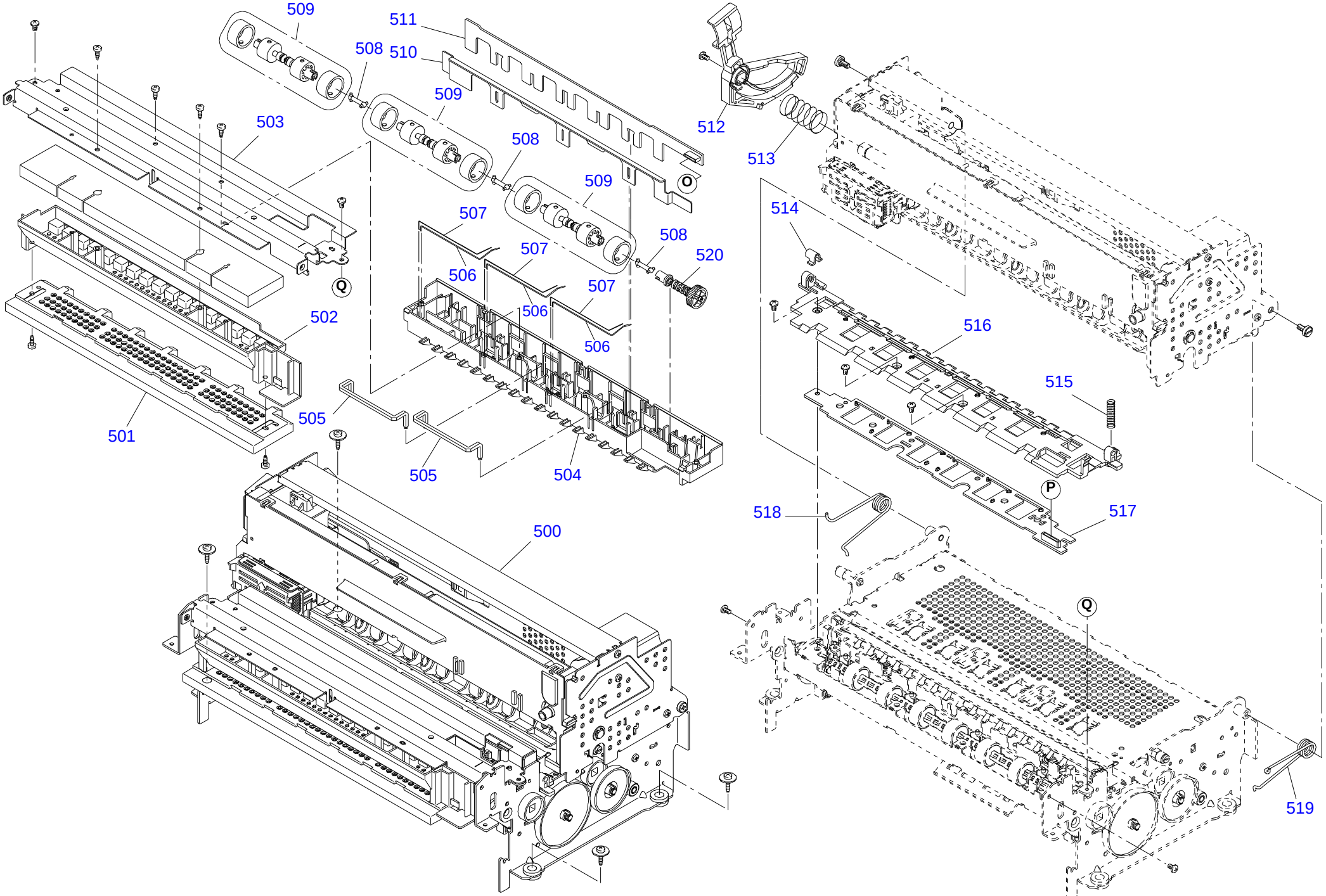
509
511
508
510
509
503
508
509
O
512
513
514
507
507
508
520
506
507
506
506
Q
502
516
515
501
505
505
504
P
518
517
500
Q
519

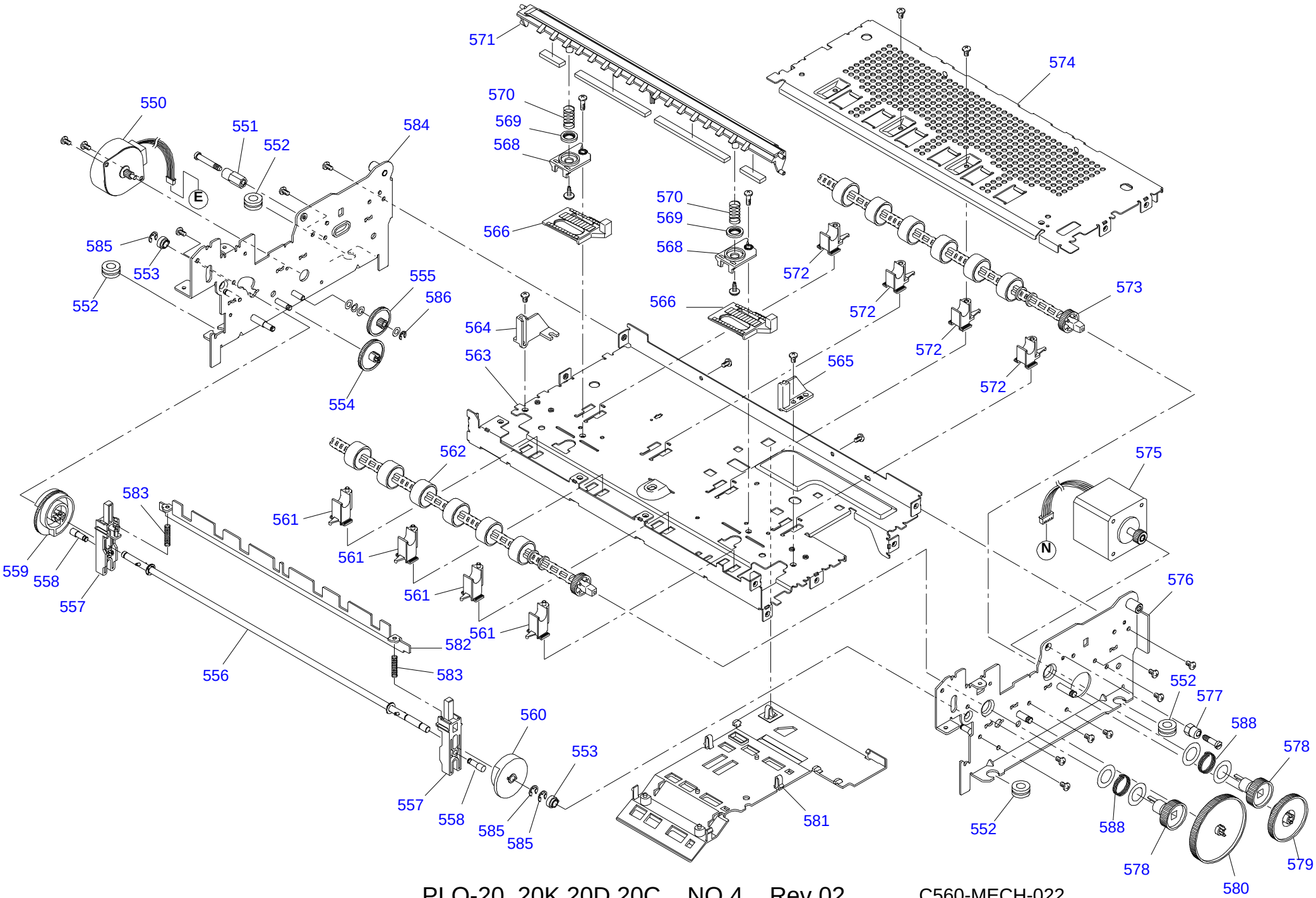

PLQ-20, 20K,20D,20C NO.4 Rev.02 C560-MECH-022

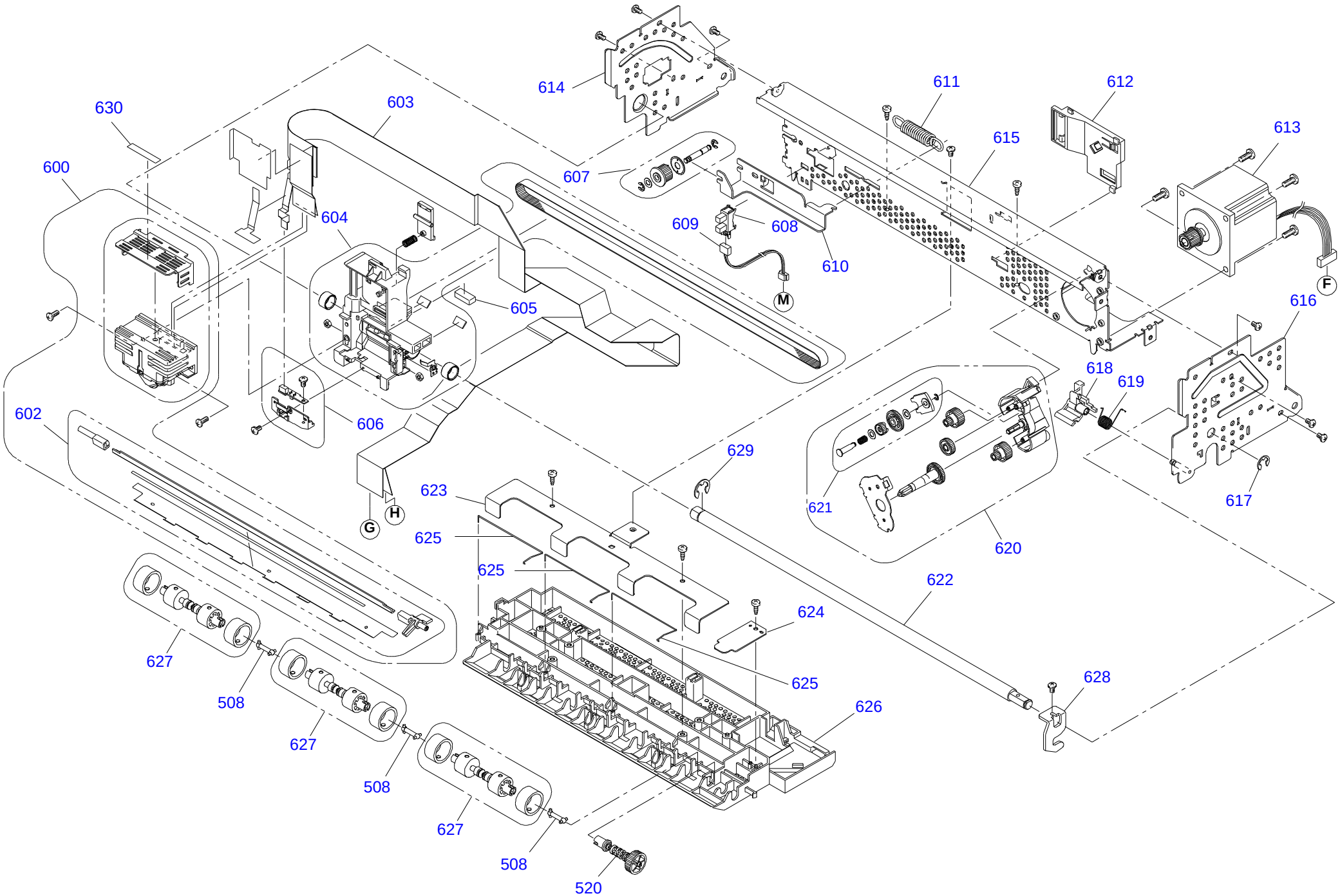

PLQ-20, 20K,20D,20C NO.5 Rev.02 C560-MECH-032