EC-1100

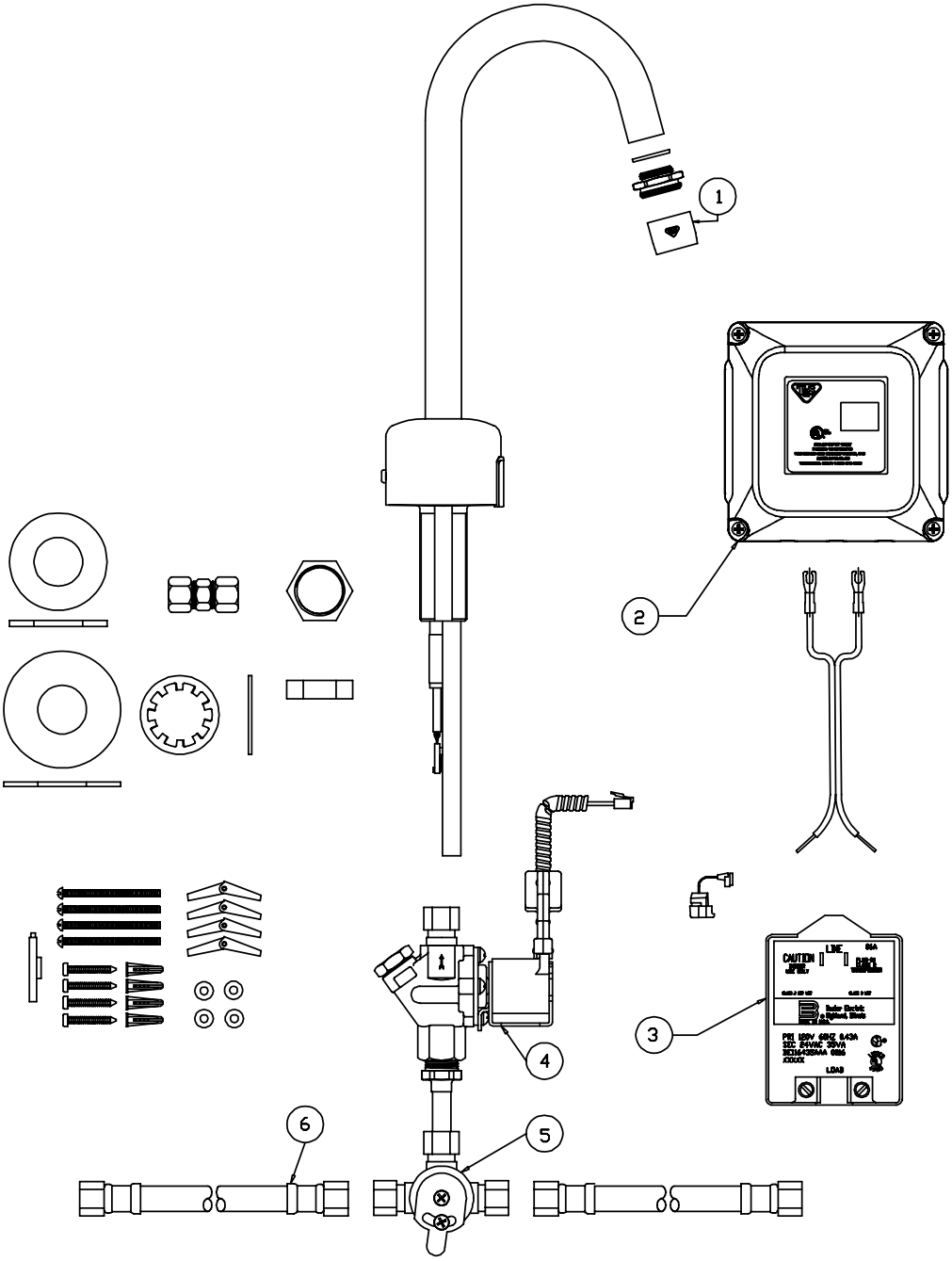

ChekPoint Deckmount Gooseneck

1	Aerator	B-0199-01
2	Asm, AC Control Module	013142-45
3	Transformer, 120V/35VA, Plug-In	013144-45
4	Valve, Solenoid	013141-45
5	Valve, Leonard Mixing	013130-45
6	Hose, Supply, Braided	013146-45