Operations Manual

Edge Plus - 25”x40” Tortilla Warmer Grill
Model #: TWD2540E

PROLUXE
WWW.PROLUXE.COM

Version: 050625

Congratulations on your selection of the Edge Plus Tortilla Warmer Grill. Proluxe is a leading manufacturer of food preparation and cooking equipment designed for the most demanding commercial kitchens. Proluxe equipment is a result of the highest quality engineering and time-tested design.

This manual includes installation, operation, and maintenance procedures for your new tortilla warmer grill. Please read this manual carefully and keep it with your machine for proper operation and lasting service.

Electrical:

220V/50-60Hz/3133W/14.2 Amps
1 phase

Also available; specify when ordering:

- Voltage: 208/240
- Amps: 20.2/23.3
- Watts: 4200/5592

Includes: 72” cord and 6-30P NEMA approved plug.

Shipping Weight:

88lbs. (39kg)

INTERNATIONAL SYMBOLS

Symboles internationaux

Power Off
éteindre

Power On
allumer

Hot Surface
surface chaude

Risk of Electrical Shock
Risque de choc électrique

Protective Earth Terminal
Borne de terre de protection

Caution - Warning
chaud - avertissement

SAFETY SUMMARY

Warning

To reduce the risk of electrical shock, do not remove or open cover. No user-serviceable parts inside. Refer servicing to qualified personnel.

Avertissement

Pour réduire le risque de choc électrique, ne pas retirer ou couvercle ouvert Aucune pièce réparable par l'utillsateur, reportez-vous à du personnel qualifié.

Warning

In case of power cord damage, do not attempt to repair or replace the power cord. Please contact the manufacturer or the local distributor.

Avertissement

Pour une protection continue contre l'incendie et de choc électrique, remplacer avec le même type et calibre du fusible. Mis fusible supplémentaire nominale max 3A, 120 Vac.

Warning

For continued protection against fire and electric shock, replace with the same type and rating fuse. Listed Supplemental Fuse rated max 3A, 120Vac.

Avertissement

Pour une protection continue contre l'incendie et de choc électrique, remplacer avec le même type et calibre du fusible. Mis fusible supplémentaire nominale max 3A, 120 Vac.

Caution Hot

Avoid touching hot surfaces while operating the machine.

Attention à chaud

Évitez de toucher les surfaces chaudes lorsque vous utilisez la machine.

Caution

When servicing or cleaning the machine, make sure that the power cord is removed from the wall socket.

During normal operation, the base of the machine must be installed or placed above the wall socket.

Avertissement

Lors de l'entretien ou du nettoyage de la machine, assurez-vous que le cordon d'alimentation est débranché de la prise murale.

GETTING STARTED

Please read carefully before attempting to use this appliance. DO NOT touch hot surfaces.

1. Carefully unpack and clean platen with mild soap and wipe clean with water.

2. Place in location where it will be used allowing for clearances per the dimensions.

3. Plug into proper wall outlet. If other appliances are connected to the same circuit make sure the total load does not exceed maximum ampacity of the circuit.

4. Press the power button, the green light above will illuminate when powered on. Preheat time will be approximately 30-40 minutes.

How To Operate

1. Press PWR to turn on and off.

2. Display shows the actual temp.

3. Short or open = “Prob”.

4. Press SET plus UP/DOWN to adjust setpoint from 350 – 525°F. SET LED on when displaying setpoint. Default is 475°F.

5. Right decimal point on display is the HEAT ON indicator.

6. Press and hold UP/DOWN to enter offset mode. Adjustable from -25°F to +25°F. Press and hold UP/DOWN to exit.

FIRST TIME SEASONING THE GRILL SURFACE

Guidelines for seasoning cooking surfaces or perform the following:

1. Bring the grill to 300°F (148°C) and leave it on while performing the next three steps.

2. Brush the cooking surfaces with a release agent. If using an aerosol agent, first apply into a cup and then brush onto cooking surface.

3. Let sit for 20 minutes.

4. Wipe the cooking surface clean, using a warm damp cloth.

DO NOT submerge in water or allow water to spill into the electrical housing. As this will void warranty and damage the unit.

PREVENTATIVE MAINTENANCE

Proluxe machines are relatively maintenance free. For a long lifespan, the following preventative maintenance should be followed:

Daily Care

Use only cleaners that are safe for aluminum. DO NOT use acidic cleaners, ice, or cold

water to clean the grill. Turn grill down during idle periods to prevent carbon buildup.

1. Turn power off and unplug, allow grill to cool before cleaning.

2. Remove particles by using a spatula with rounded corners.

3. The platen should only be cleaned with mild soap and warm water then wiped off with a clean, soft cloth or soft sponge.

4. Wipe exterior surfaces daily with mild soap and warm water.

DO NOT use ice or cold water to cool the unit down. This can cause the machine to warp.

Carbon Cleaning:

When carbon buildup occurs, use a carbon removal agent that is safe for aluminum, follow the instructions provided with the product. When this process is complete, you must re-season your grill.

Service Problems

Contact our factory at (800) 624-6717 (U.S. only) or approved service agency. When contacting the factory for information, parts or service instructions, please provide the serial number of the machine be provided. This number can be found on the serial plate located on the rear of the machine.

PROLUXE

TWD2540E

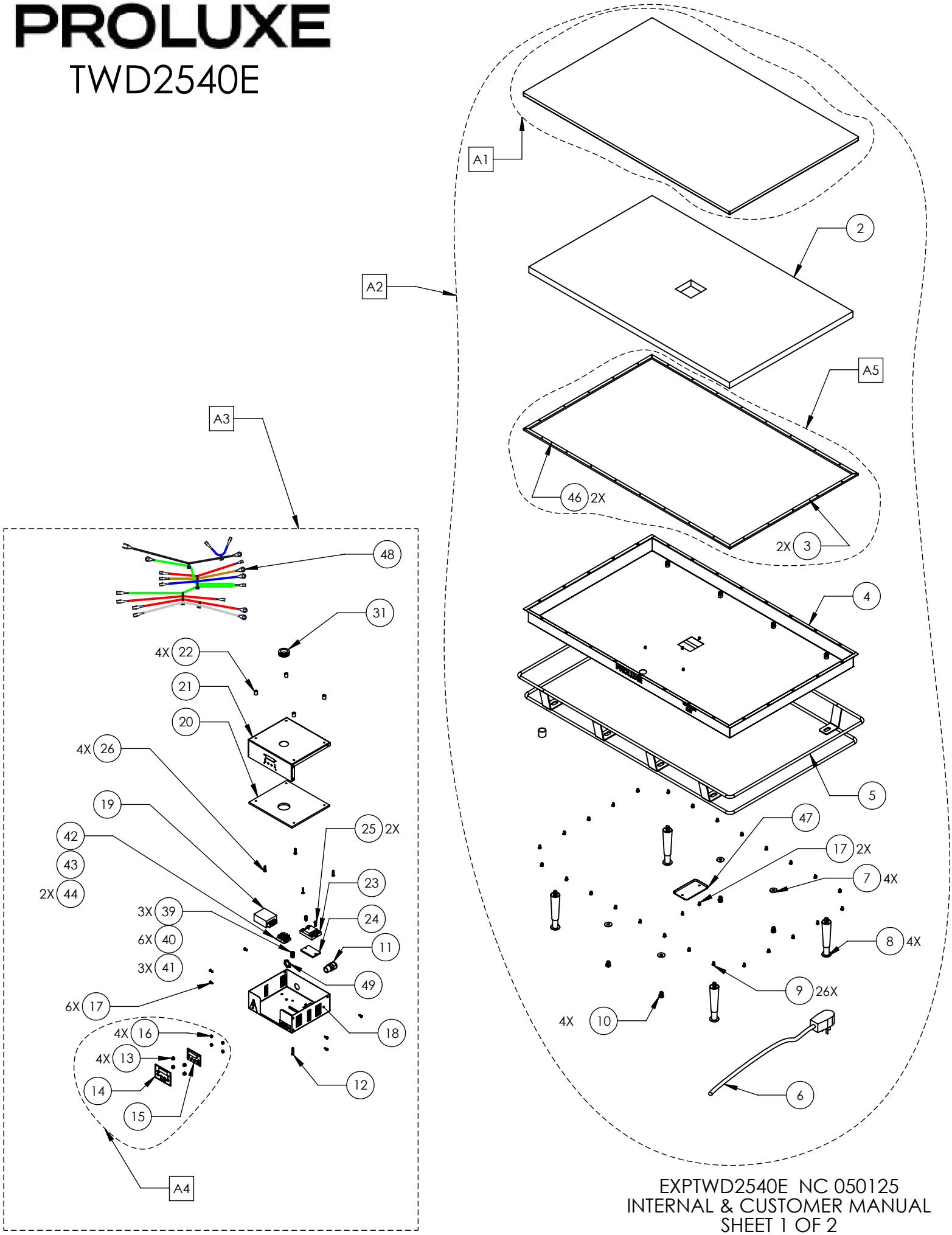

EXPTWD2540E NC 050125
INTERNAL & CUSTOMER MANUAL
SHEET 1 OF 2

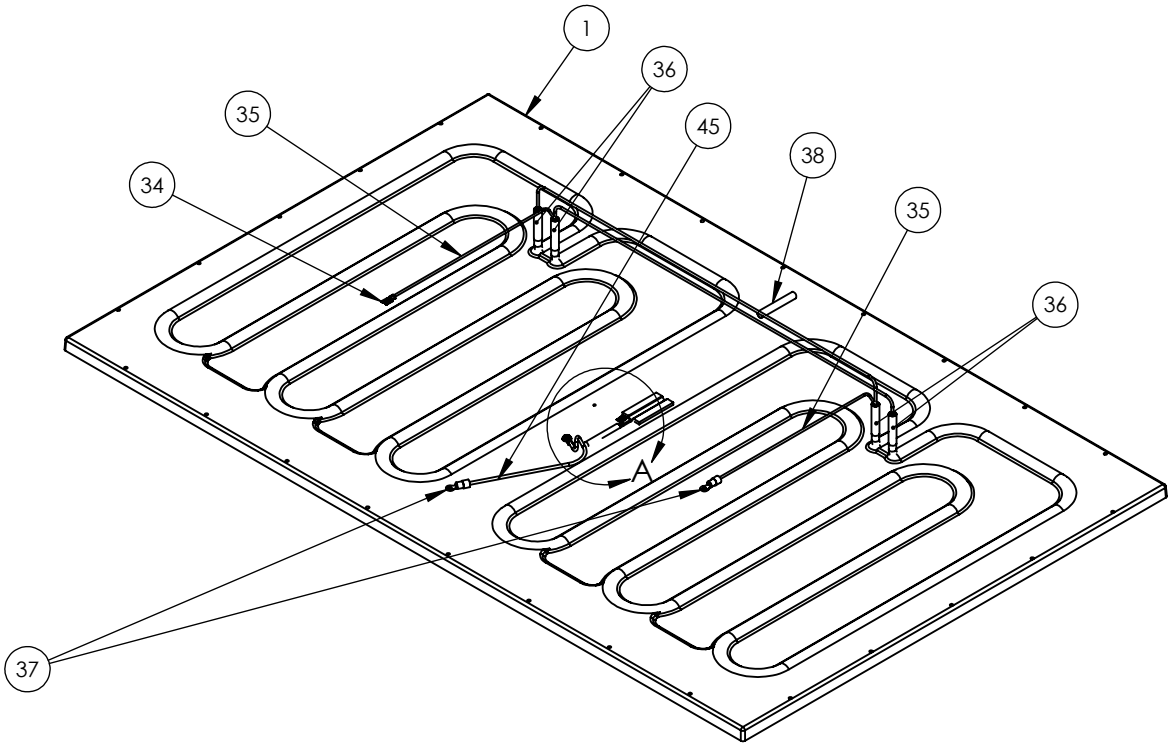

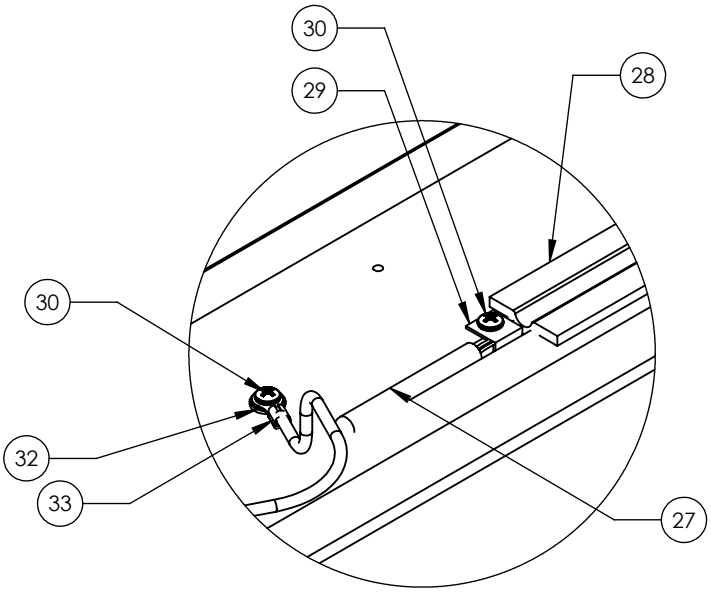

DETAIL A

SCALE 1 : 2

EXPTWD2540E NC 050125
INTERNAL & CUSTOMER MANUAL
SHEET 2 OF 2

PARTS LIST FOR MODEL TWD2540E

ITEM NO	DESCRIPTION	TWD2540E 208V	QTY.
2	INSULATION, SUPERWOOL 1", 25 X 40	11016938806	1
3	INSULATION STRIP FLEX WRAP 25"	1101086252	2
4	BOTTOM SHROUD ASSEMBLY	PL34306	1
5	BURN GUARD ASSEMBLY	110108640	1
6	POWER CORD	110573175	1
7	WASHER, CUT 5/16"	WC516	4
8	LEG, APPLIANCE, 4", SATIN NICKEL FINISH	AE601653	4
9	SCREW, PAN HEAD PHILLIPS 10-24 X 3/8 STAINLESS	SP102438S	26
10	BOLT, HEX 3/8-16 X 1/2	BH381612	4
11	HEYCO STRAIN RELIEF	3231	1
12	SCREW, PAN PHILIP HEAD 8-32 x 1"	SP8321	1
13	RUBBER GROMMET 3/16" ID, 9/32" HOLE DIAMETER	PL1169478	4
14	OVERLAY, TW SERIES	OTW2540	1
15	CONTROLLER, DIGITAL TW	PL34305	1
16	NUT, HEX SELF LOCKING WITH NYLON 6-32	NHSL632	4
17	SCREW, PAN HD. 8-32 x 3/8 SS, PHILLIPS	SP83238S	8
18	HOUSING, ELECTRONICS ASSEMBLY	PL34301	1
19	POWER SUPPLY 5VDC	TP2720075	1
20	INSULATION, SUPERWOOL	PL34304	1
21	COVER, HOUSING ASSEMBLY	PL34302	1
22	CERAMIC SPACER	PL34309	4
23	SOLID STATE RELAY , 50 AMP	MPSR2450	1
24	SINK, HEAT, ALUMINUM PAD	11057322	1
25	SCREW, PAN HD 8-32X5/8"	SP83258	2
26	SCREW, PAN HEAD PHILLIP, 8-32 X 3/4 STAINLESS	SP83234S	4
27	2000 OHM RTD 2000 OHM SENSOR 45.5"	1108881101	1
29	HOLDER, SENSOR	KT81	1
31	GROMMET, COUNDUIT, SL1577	110115501C10	1
39	NUT, HEX 8-32	NH832	3
40	WASHER, SAE #8	WSAE8	6
41	WASHER, INTERNAL LOCK #8	WLIT8	3
42	TERMINAL BLOCK 2 STAGE DOUBLE	6012	1
43	MARKER STRIP 2 STAGE DOUBLE	MS6012	1
44	SCREW, PAN HD 8-32X1/2" PHILLIPS	SP83212	2
46	INSULATION STRIP FLEX WRAP 40"	1101086251	2
47	PLATE, ELECTRICAL BLANK	110108651	1
48	WIRE HARNESS	PL34310	1
49	NUT, CONDUIT 1/2"	NC12	1
A1	**PLATEN WIRING ONLY**	**TP3434200K**	**1**
A2	**PLATTEN SHROUD ASSEMBLY**	**TP3434200AK**	**1**
A3	**CONTROL BOX ASSEMBLY**	**PL34300AK**	**1**
A4	**CONTROLLER, DIGITAL TW ASSEMBLY**	**PL34305K**	**1**
A5	**INSULATION GASKET KIT, TW2540**	**TP25405152K**	**1**

VAC: 208
AMPS: 20.2
WATTS: 4200

PROLUXE

TWD2540E WIRE DIAGRAM

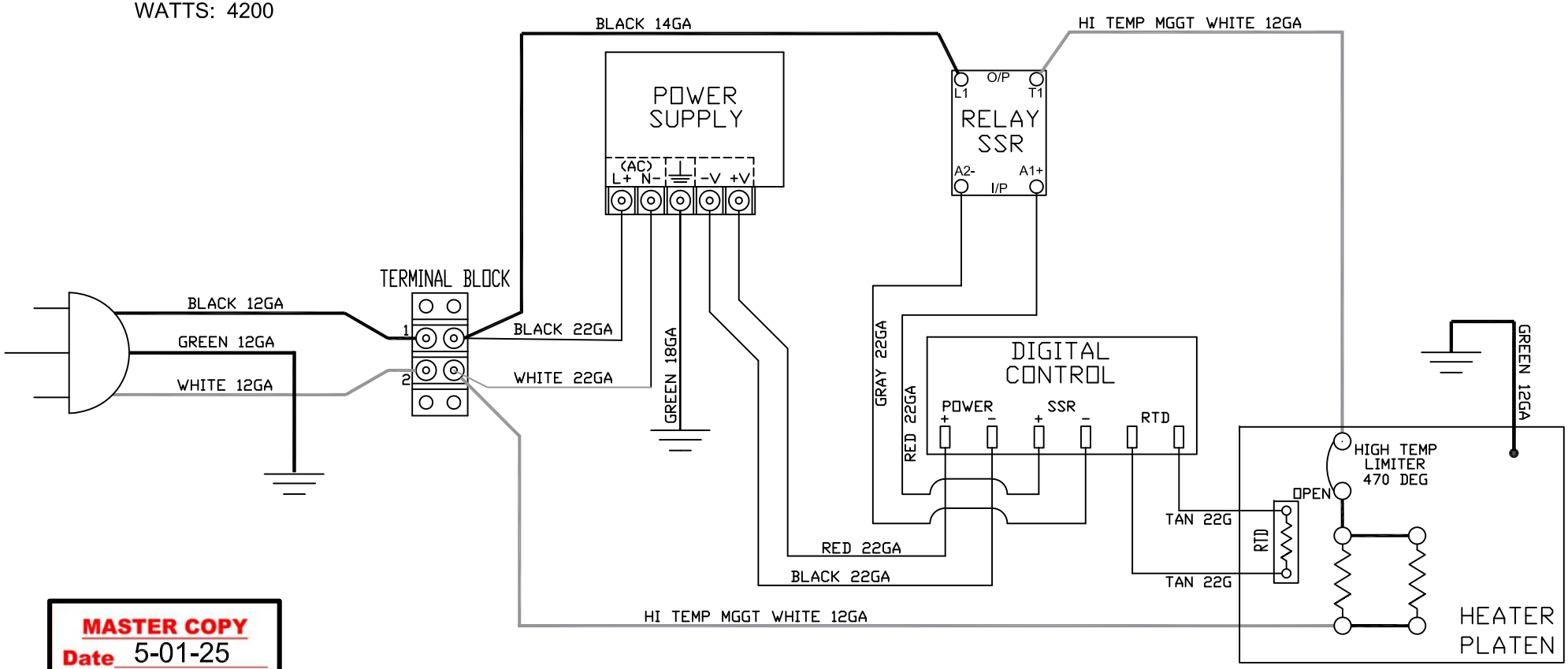

MASTER COPY
Date 5-01-25

WDTWD2540E NC 050125

Warranty & Return Policy

Proluxe warrants all products manufactured by it against defects in workmanship or materials from the date of purchase for a period of 1 year on parts and labor. This warranty applies to only equipment purchased and used in the United States.

Warranty period shall begin when equipment ships. Warranty travel will only be covered for 60 miles.

ALL WARRANTY SERVICE CALLS MUST BE APPROVED BY PROLUXE. IF THIS PROCEDURE IS NOT FOLLOWED, WARRANTY SERVICE WILL NOT BE COVERED. WARRANTY SERVICE WILL BE PAID ON STRAIGHT TIME, OVERTIME WILL NOT BE COVERED.

Service Calls

Contact our factory to obtain warranty service. Proluxe must issue a return authorization number, and call tag, or find the name and location of a Factory Authorized Service Center nearest you. When calling for service, please furnish the model number, serial number, and a description of the problem.

EXCLUSIONS

The warranties provided by Proluxe DO NOT apply to the following:

- Damage due to misuse, abuse, alteration, or accident.
- Improper or unauthorized repairs.
- Submerged in water.
- Damaged in shipment.
- Equipment exported to foreign countries.

Special Order Equipment and Accessories

Cannot be canceled and are not returnable unless defective within the terms of this warranty.
In no event shall Proluxe be liable for consequential damages arising out of the failure of any of its products if operated improperly or caused by normal wear or damaged by operator abuse.

Limited Lifetime Warranty on Heating Elements

If replacement is needed, Proluxe will send the new part at no charge but labor will not be covered unless the unit is still under the 1 year manufacturer warranty.

RETURNED MERCHANDISE POLICY

Should it become necessary to return any of the company's products, the following instructions must be adhered to: First, contact our customer service department for approval and a return authorization number. Please have the serial number of your item available at that time. All merchandise must be shipped freight prepaid by customer or service agency. Subject to the inspection of the product by the company, a restocking charge of 20% of the Net purchased price paid to Proluxe will be assessed.

Merchandise may not be returned for credit without prior written approval of Proluxe.

Collect shipments will not be accepted. No returns after 60 days of original shipment date on machines. Purchased parts may not be returned after 30 days. If upon inspection by Proluxe or its authorized agent it is determined the equipment has not been used in an appropriate manner, has been modified, or has not been properly maintained, or has been subject to misuse, misapplication, neglect, abuse, accident, unauthorized modification, damage during transit, delivery, fire, flood, act or war, riot or act of God, then this warranty shall be deemed null and void.

TERMS & CONDITIONS

1. Price List prices are suggested retail prices and are shown in U.S. Dollars.

2. Terms of Payment: 1% 10 days, NET 30 days.

3. New Accounts: Satisfactory credit information must be provided before open account status can be extended.

Unless agreed otherwise, all shipments will be made C.O.D., Cash in advance.

4. Pricing: Prices, specifications, model numbers, capacities and accessories are subject to change without notice.

5. Freight/Routing: Method of shipment will be determined by Proluxe unless otherwise advised by purchaser.

6. Damaged Claims: All merchandise shipped at purchaser's risk. Inspection must be made by purchaser at time goods are received. If goods are damaged, the PURCHASER shall request that the agent of the transportation company make a written notation on the proper shipping documents immediately and then file a claim for damages.

Note: Goods damaged in shipping are non-returnable.

7. Returns: Machines may not be returned after 60 days. Purchased parts may not be returned after 30 days. A restocking fee of 20% will be assessed on non-warranty returns.

8. Taxes: Prices indicated herein DO NOT include State, Federal, Local or foreign taxes or duties, nor do they include fees, permits, insurance or other levies, all of which are the responsibility of the purchaser.

9. All orders are subject to acceptance by Proluxe.

10. Possession of this price list shall not be considered an offer to sell