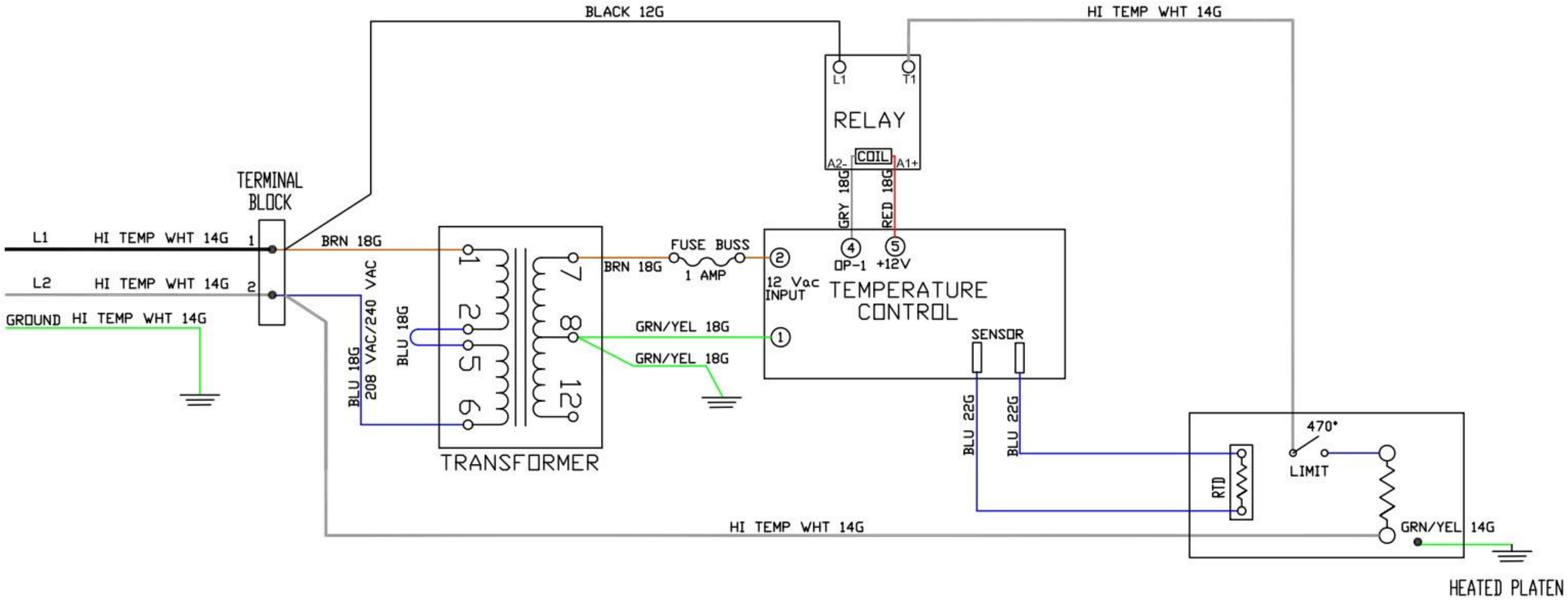
BLACK 12G
HI TEMP WHT 14G
L1
T1
RELAY
COIL
A2-
A1+
GRY 18G
RED 18G
TERMINAL BLOCK
L1
HI TEMP WHT 14G
1
BRN 18G
L2
HI TEMP WHT 14G
2
GROUND HI TEMP WHT 14G
BLU 18G
208 VAC/240 VAC
BLU 18G
1
2
5
6
7
8
12
TRANSFORMER
BRN 18G
FUSE BUSS
1 AMP
GRN/YEL 18G
GRN/YEL 18G
2
12 Vac INPUT
4
OP-1
5
+12V
TEMPERATURE CONTROL
1
SENSOR
BLU 22G
BLU 22G
470°
LIMIT
RTD
HI TEMP WHT 14G
GRN/YEL 14G
HEATED PLATEN