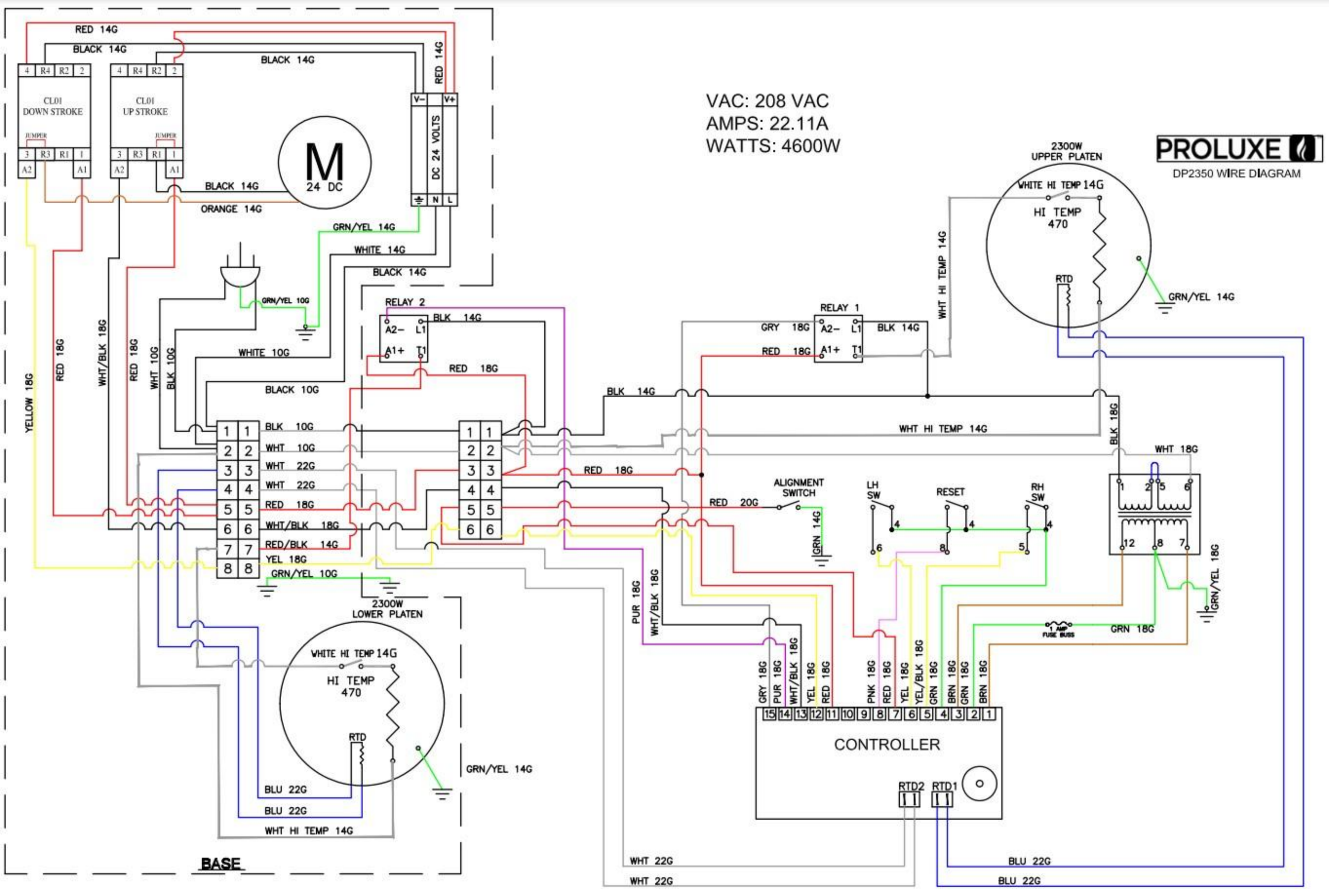
PROLUXE
DP2350 WIRE DIAGRAM
VAC: 208 VAC
AMPS: 22.11A
WATTS: 4600W
CL01 DOWN STROKE
CL01 UP STROKE
JUMPER
M
24 DC
DC 24 VOLTS
V-
V+
N
L
RED 14G
BLACK 14G
ORANGE 14G
GRN/YEL 14G
WHITE 14G
GRN/YEL 10G
RELAY 2
A2-
L1
A1+
T1
RELAY 1
GRY 18G
RED 18G
BLK 14G
WHITE 10G
BLACK 10G
YELLOW 18G
WHT/BLK 18G
WHT 10G
BLK 10G
BLK 10G
WHT 10G
WHT 22G
WHT 22G
RED 18G
WHT/BLK 18G
RED/BLK 14G
YEL 18G
GRN/YEL 10G
2300W UPPER PLATEN
WHITE HI TEMP 14G
HI TEMP 470
RTD
WHT HI TEMP 14G
BLK 18G
WHT 18G
ALIGNMENT SWITCH
RED 20G
GRN 14G
LH SW
RESET
RH SW
PUR 18G
1 AMP FUSE BUSS
GRN 18G
2300W LOWER PLATEN
BLU 22G
GRY 18G
PUR 18G
WHT/BLK 18G
YEL 18G
RED 18G
PNK 18G
YEL/BLK 18G
GRN 18G
BRN 18G
CONTROLLER
RTD2
RTD1
WHT 22G
BASE