VAC: 208 VAC
AMPS: 22.12A
WATTS: 4600W

PROLUXE
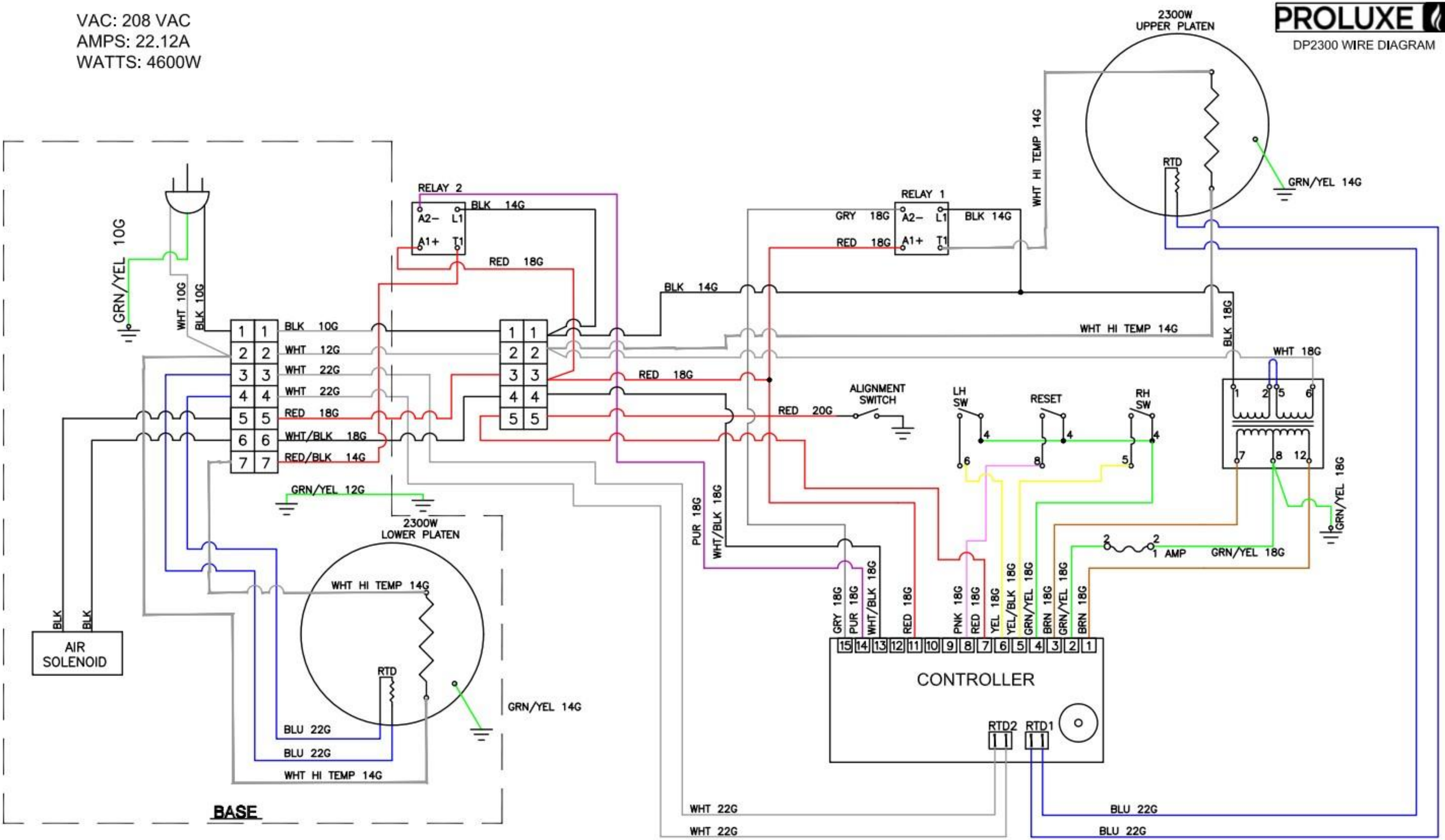
DP2300 WIRE DIAGRAM