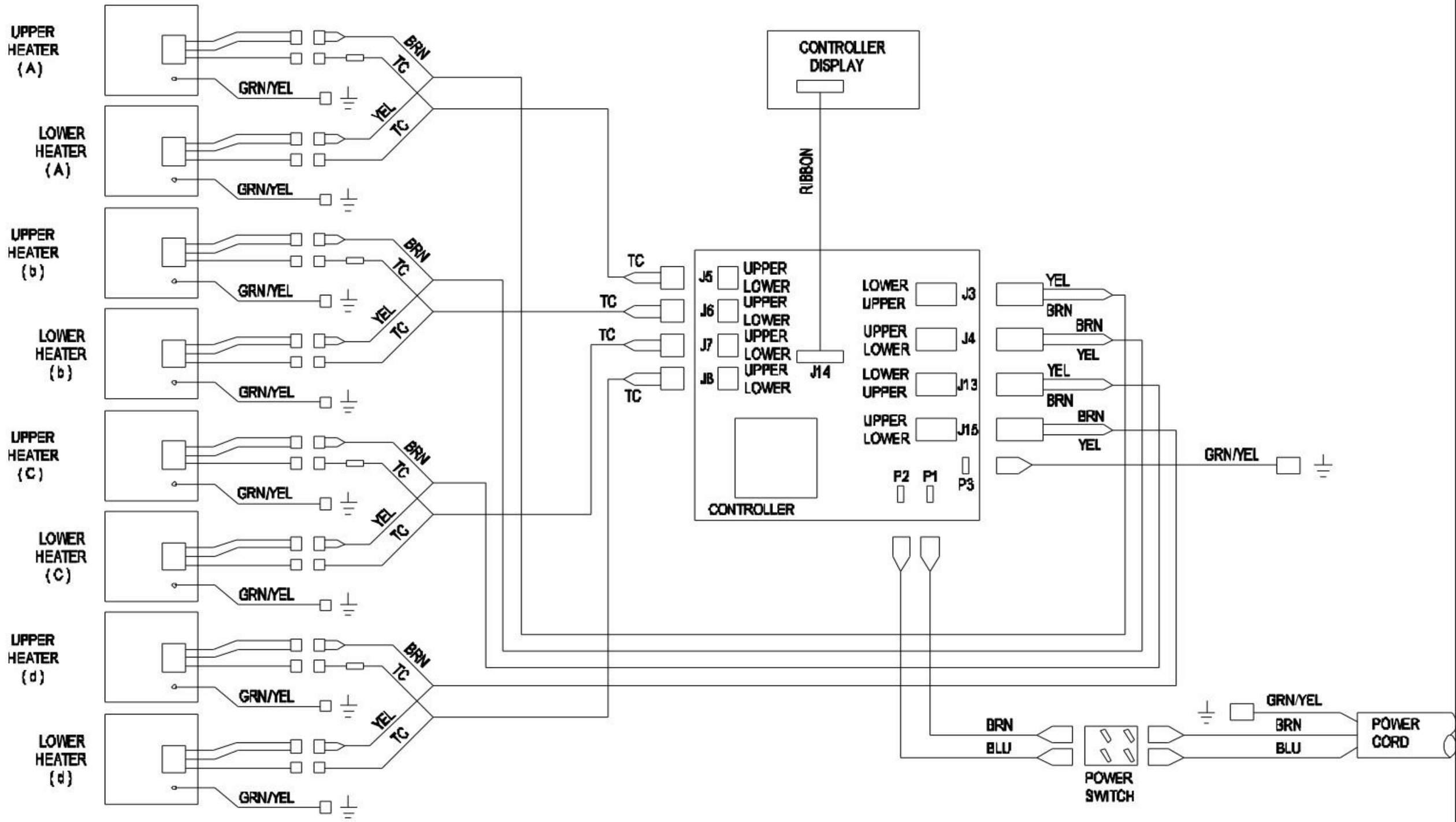
UPPER HEATER (A)
LOWER HEATER (A)
UPPER HEATER (b)
LOWER HEATER (b)
UPPER HEATER (C)
LOWER HEATER (C)
UPPER HEATER (d)
LOWER HEATER (d)
GRN/YEL
BRN
YEL
TC
CONTROLLER DISPLAY
RIBBON
J5
J6
J7
J8
J14
J3
J4
J13
J15
UPPER
LOWER
P2
P1
P3
CONTROLLER
BLU
POWER SWITCH
POWER CORD