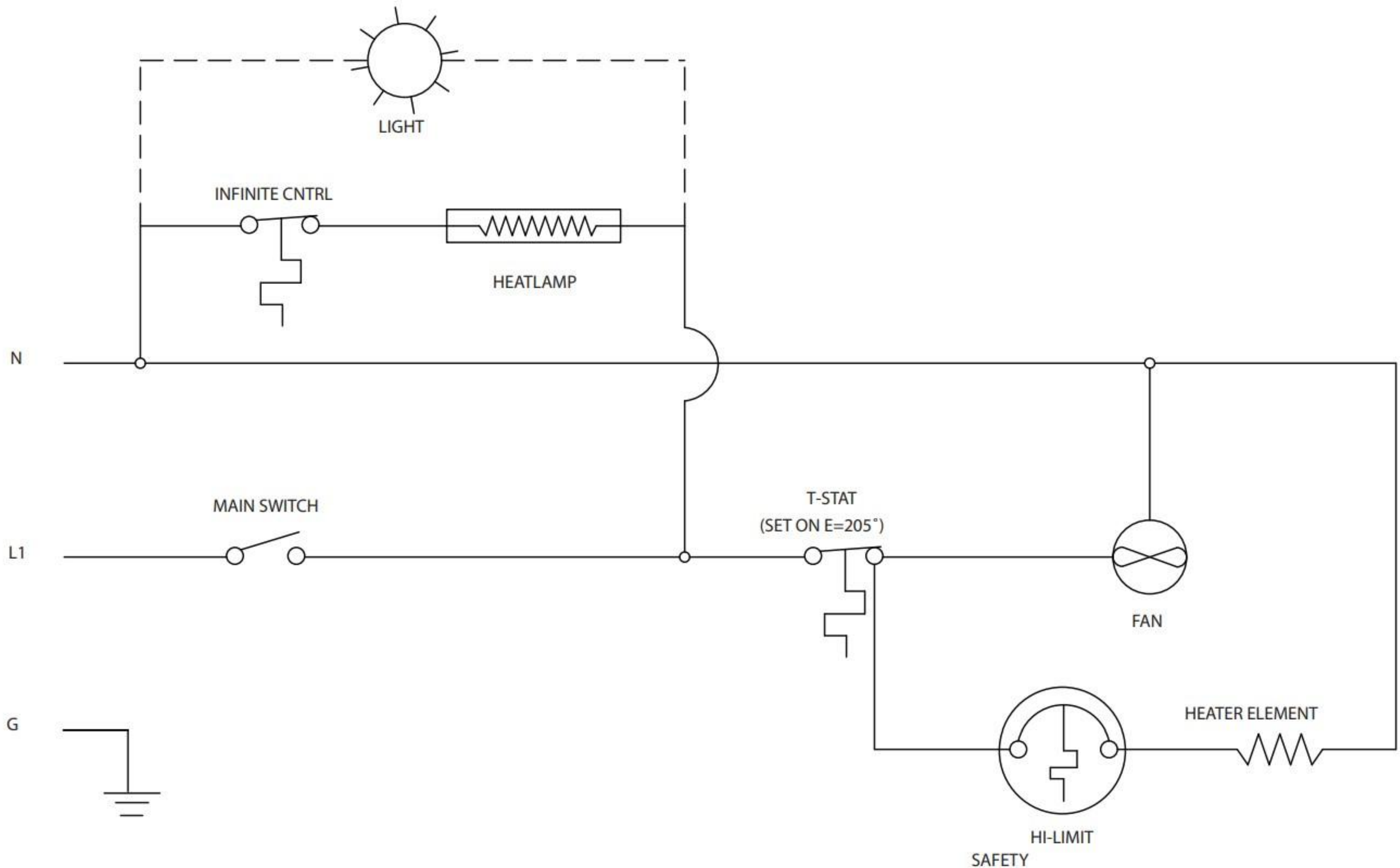
LIGHT
INFINITE CNTRL
HEATLAMP
N
MAIN SWITCH
T-STAT
(SET ON E=205˚)
L1
FAN
G
HEATER ELEMENT
HI-LIMIT
SAFETY

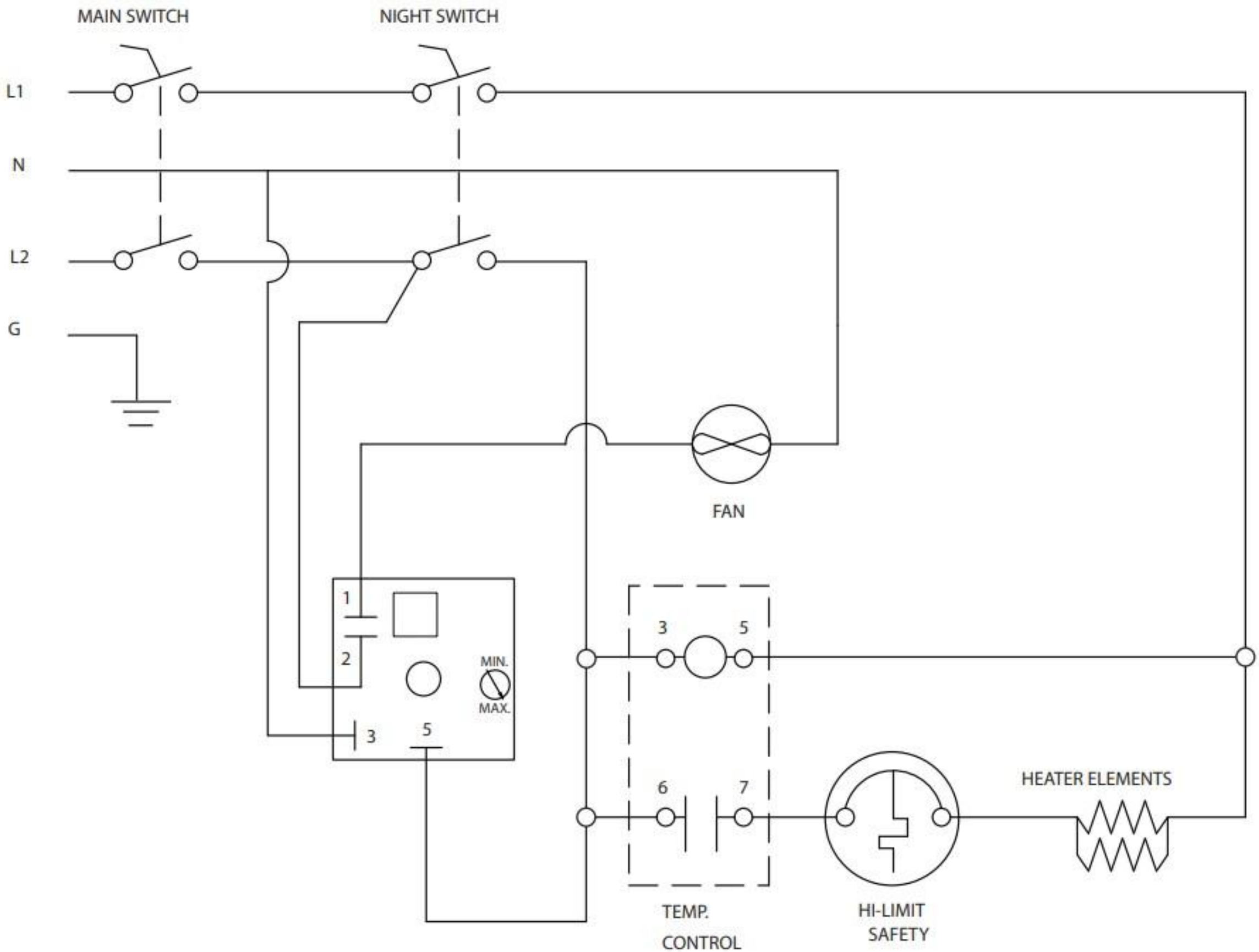
MAIN SWITCH
NIGHT SWITCH
L1
N
L2
G
FAN
1
2
3
5
MIN.
MAX.
3
5
6
7
TEMP.
CONTROL
HI-LIMIT
SAFETY
HEATER ELEMENTS

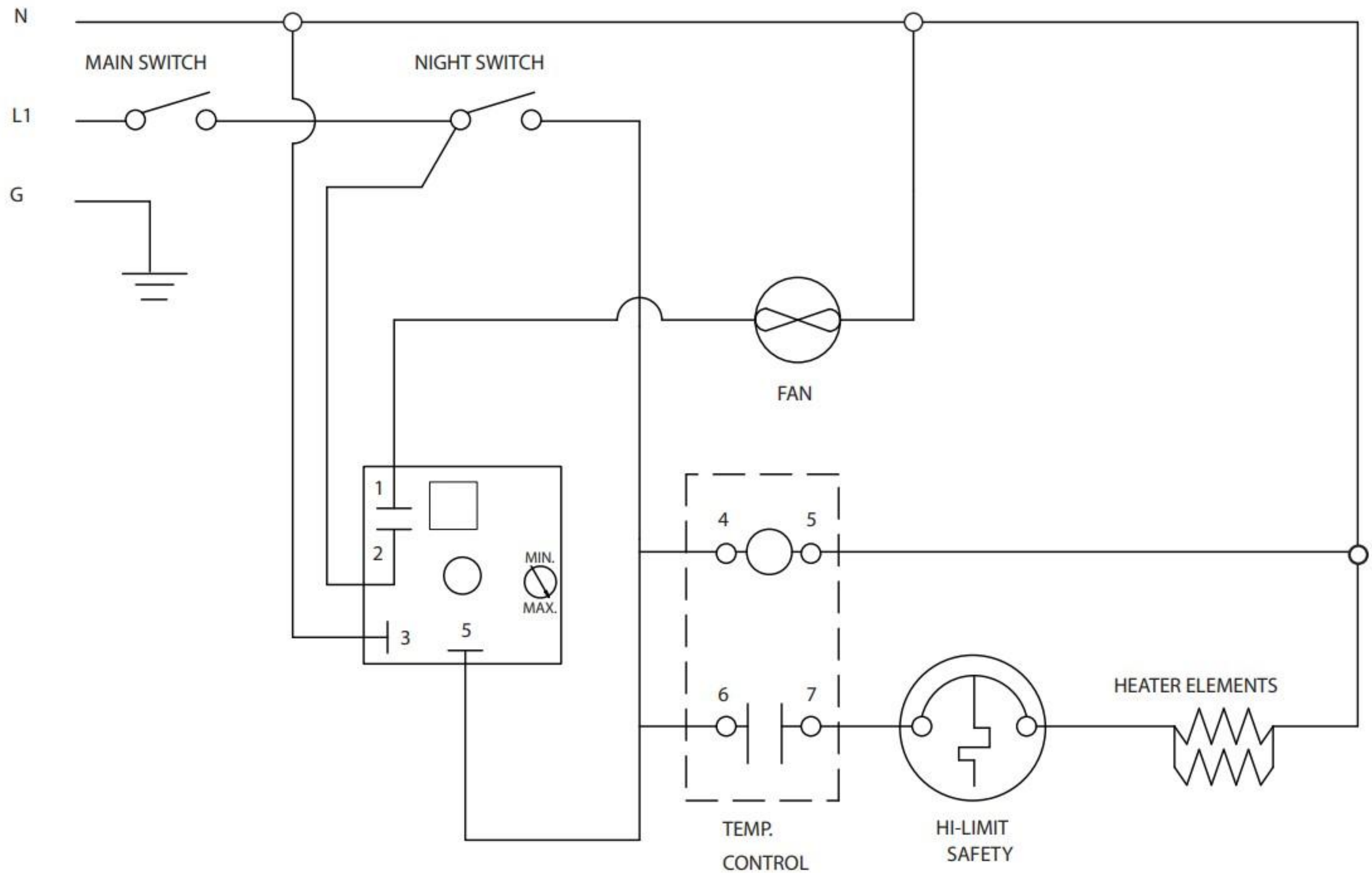
N
MAIN SWITCH
NIGHT SWITCH
L1
G
FAN
1
2
MIN.
MAX.
3
5
4
5
6
7
HEATER ELEMENTS
TEMP.
CONTROL
HI-LIMIT
SAFETY

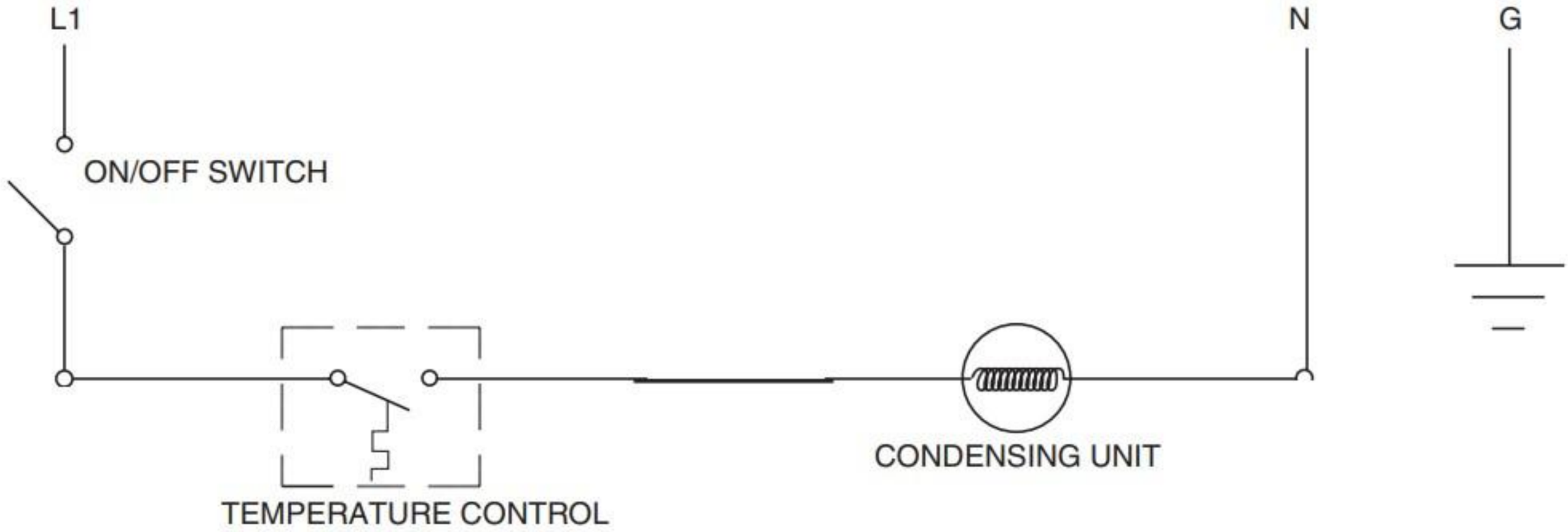
L1
N
G
ON/OFF SWITCH
CONDENSING UNIT
TEMPERATURE CONTROL

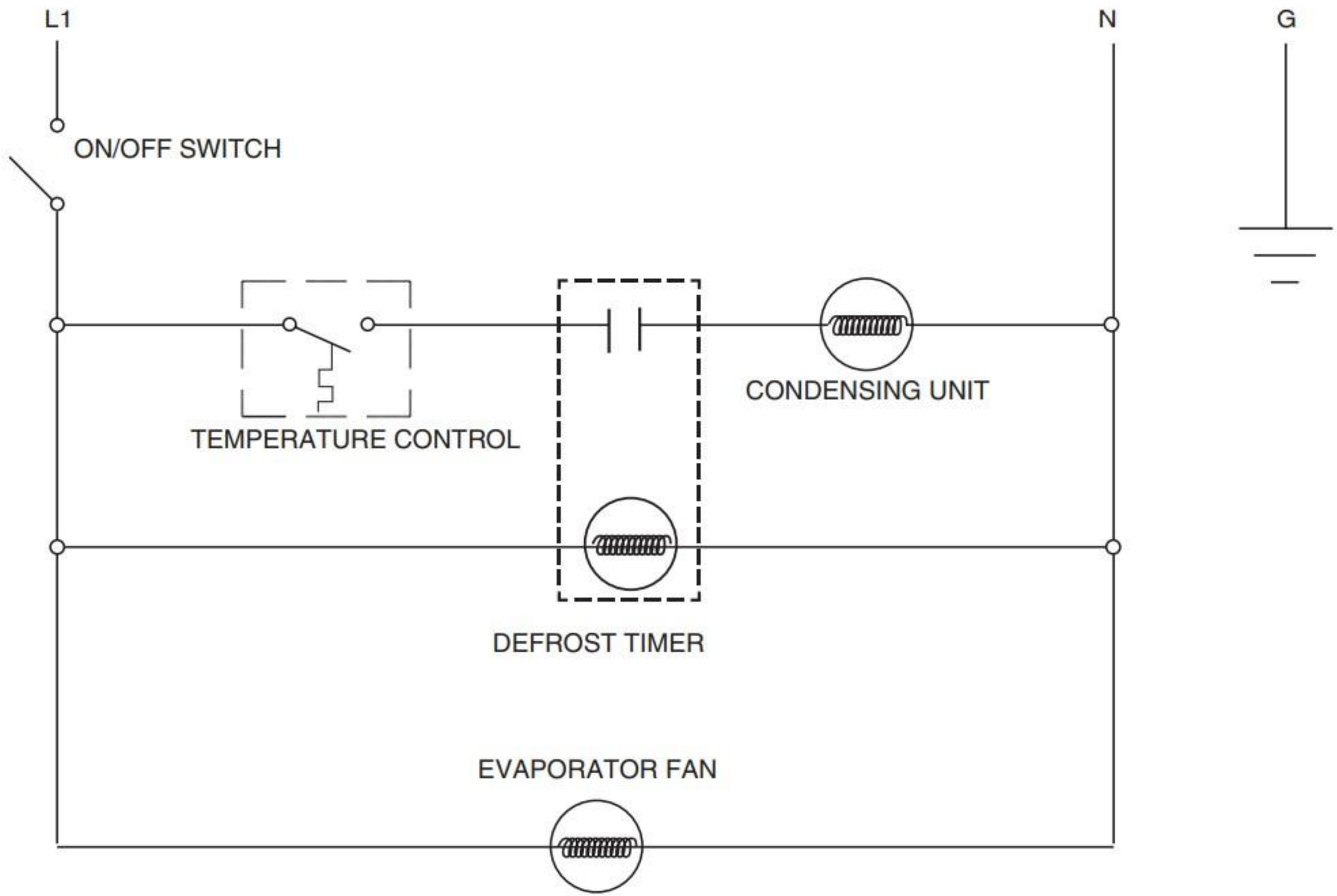
L1
N
G
ON/OFF SWITCH
TEMPERATURE CONTROL
CONDENSING UNIT
DEFROST TIMER
EVAPORATOR FAN