WIRING DIAGRAMS

FIG.	FIELD INSTALLED HEATER MODEL	FB4C	FE4A FE5A	FH4C	FV4C	FX4D	FY5B	PF4MA	PF4MB	LABEL
1	KFCEH0401N03	18,24		001		19,25	18,24	18,19,24,25		328613–101
1	KFCEH0501N05	18–60	002–006	001–002	002–006	19–61	18–60	18–61	19–61	328613–101
1	KFCEH0801N08	18–60	002–006	001–003	002–006	19–61	18–60	18–61	19–61	328613–101
1	KFCEH0901N10	18–60	002–006	001–004	002–006	19–61	18–60	18–61	19–61	328613–101
5	KFCEH1601315	42–60	002–006	001–004	002–006	43–61	18–60	18–61	19–61	328614–101
6	KFCEH2001318	42–60	003–006	001–004	002–006	43–61	42–60	42–61	37–61	328615–101
1	KFCEH2401C05	18–60	002–006	001–002	002–006	19–61	18–60	18–61	19–61	328613–101
1	KFCEH2501C08	18–60	002–006	001–003	002–006	19–61	18–60	18–61	19–61	328613–101
1	KFCEH2601C10	18–60	002–006	001–004	002–006	19–61	18–60	18–61	19–61	328613–101
2	KFCEH2901N09	36–60	002–006	003–004	002–006	37–61	36–60	36–60	31–61	328606–101
3	KFCEH3001F15	24–60	002–006	001–004	002–006	25–61	24–60	24–61	19–61	328605–101
3	KFCEH3101C15	24–60	002–006	001–004	002–006	25–61	24–60	24–61	19–61	328605–101
4	KFCEH3201F20	30–60	002–006	002–004	002–006	31–61	30–60	30–61	19–61	328604–101
4	KFCEH3301C20	30–60	002–006	002–004	002–006	31–61	30–60	30–61	19–61	328604–101
7,8	KFCEH3401F24	48,60	004–006	003–004	005–006	49–61	48–60	48–61	49–61	328602–101, 328603–101
7,8	KFCEH3501F30	48,60	004–006	003–004	005–006	49–61	48–60	48–61	49–61	328602–101, 328603–101

FIG.	FIELD INSTALLED HEATER MODEL	FY5B	LABEL
9	MKFCEH0501N05	18,24	328205–101
9	MKFCEH0801N08	18,30	328205–101
9	MKFCEH0901N10	24–48	328205–101
10	MKFCEH3001F15	36–60	328206–101

FAN COIL WITH RBC X–13 MOTOR

FIG.	FIELD INSTALLED HEATER MODEL	FB4C	FX4D	LABEL
11	MKFCEH0501N05	18,24	19,25	335975–101
11	MKFCEH0801N08	18,30	31	335975–101
11	MKFCEH0901N10	24–48	37–61	335975–101
12	MKFCEH3001F15	36–60	61	336923–101

FAN COIL WITH BROAD OCEAN DIGI–MOTOR

FIG.	FIELD INSTALLED HEATER MODEL	FB4C	FX4D	LABEL
13	MKFCEH0501N05	24	–	337518–101
13	MKFCEH0801N08	18,30	31	337518–101
13	MKFCEH0901N10	24–36	37–49	337518–101
14	MKFCEH3001F15	36	–	338001–101

FAN COIL WITH COOLING ONLY CONTROL

FIG.	MODEL	SIZE	LABEL
15	FV4C	002–006	326014–101
16	FE4A/FE5A	002–006	333107–101
17	FY5B/PF4MNA	18–60	328964–101
17	FH4C	001–004	328964–101
18	FB4C/FX4D (RBC)	18–61	336228–101
18	PF4MNA/B	19,25,31,37,43,49,61	336228–101
19	FB4C/FX4D (BOM)	18–61	337519–101

ELECTRIC HEATERS

FIG.	HEATER MODEL	FF1E	LABEL
20	KFDEH0801D05	18,24,30,36	324494–101
20	KFDEH0901D75	18,24,30,36	324494–101
20	KFDEH1001D11	18,24,30,36	324494–101
20	MKFDEH0801D05	18,24,30,36	324494–101
20	MKFDEH0901D75	18,24,30,36	324494–101
20	MKFDEH1001D11	18,24,30,36	324494–101
21	KFEEH0101D05	19,25,31,37	335826–101
21	KFEEH0201D75	19,25,31,37	335826–101
21	KFEEH0301D11	19,25,31,37	335826–101

FIG.	HEATER MODEL	FFMA	LABEL
22	EHK2–05B	18,24,30,36	NA
22	EHK2–08B	18,24,30,36	NA
22	EHK2–10B	18,24,30,36	NA

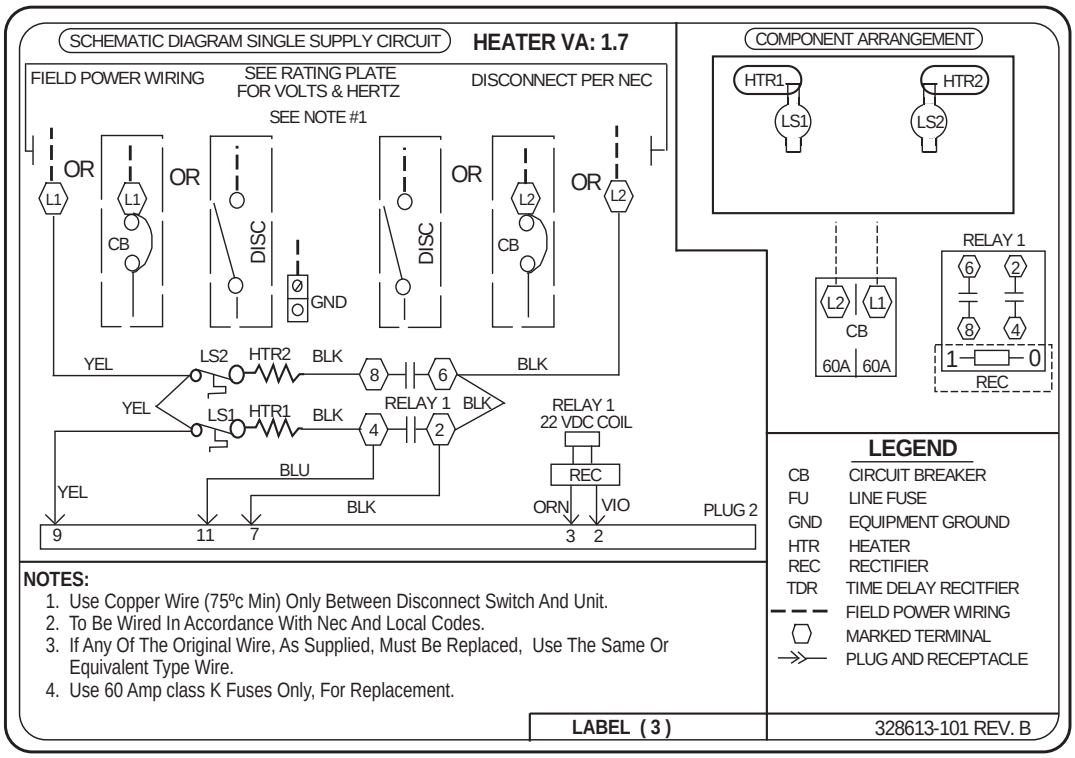

Fig. 1 – 328613-101

A07001

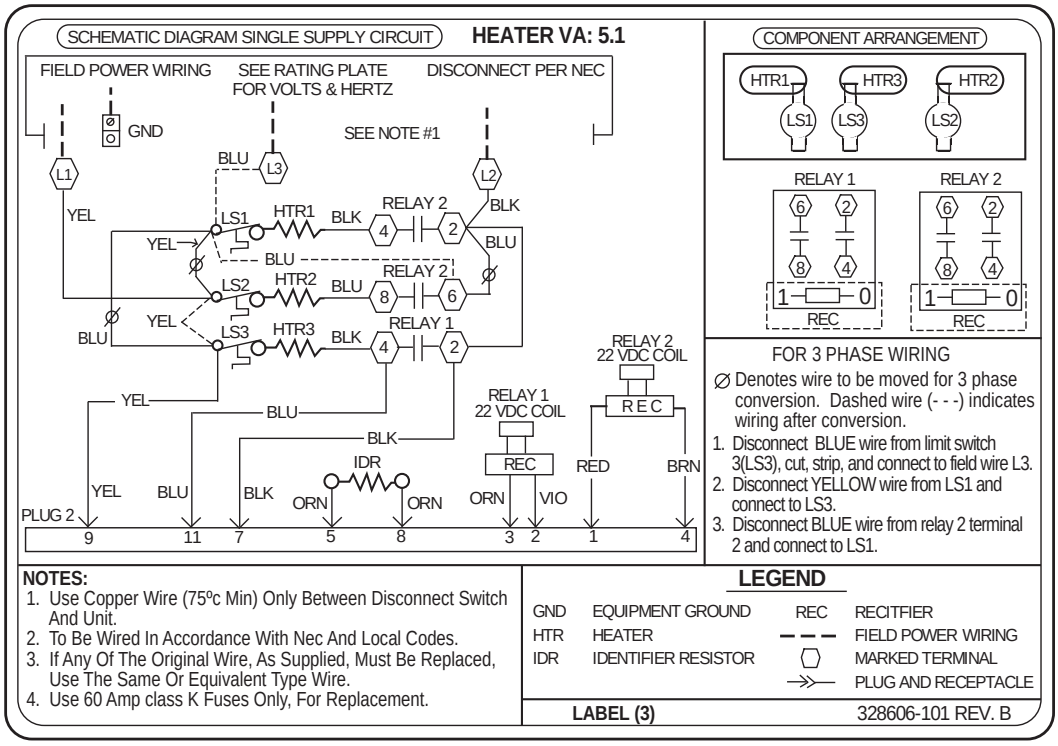

Fig. 2 – 328606-101

A07002

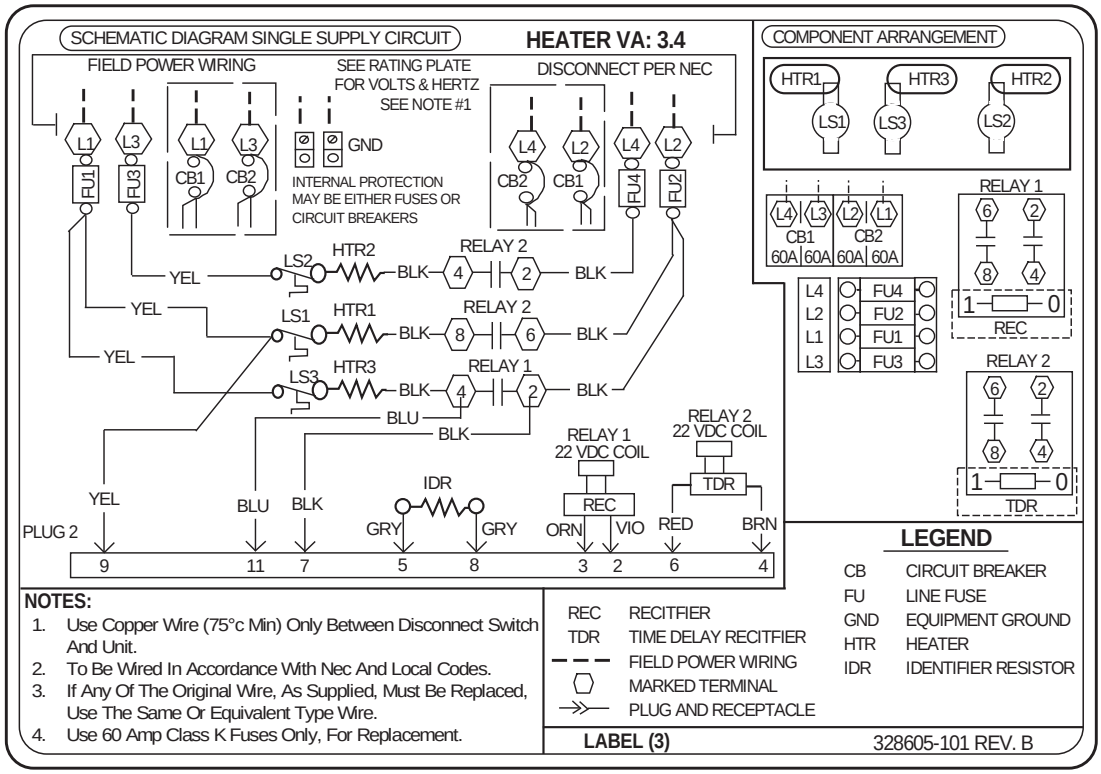

Fig. 3 – 328605-101

A07003

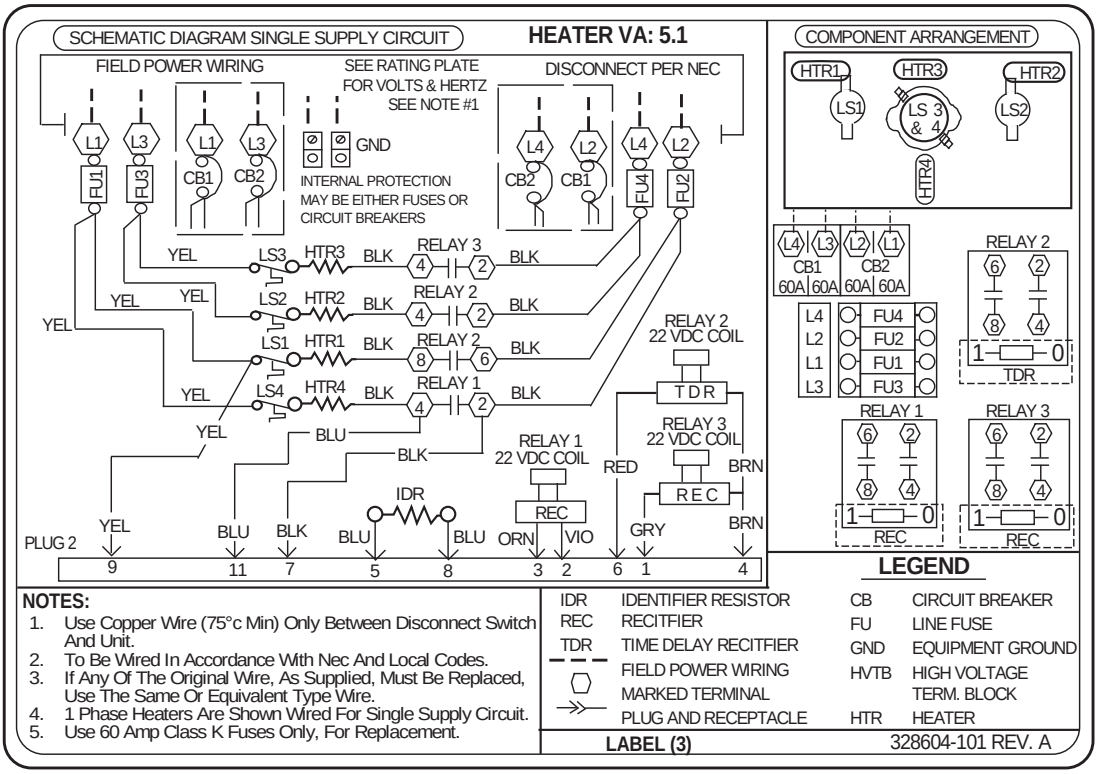

Fig. 4 – 328604-101

A07004

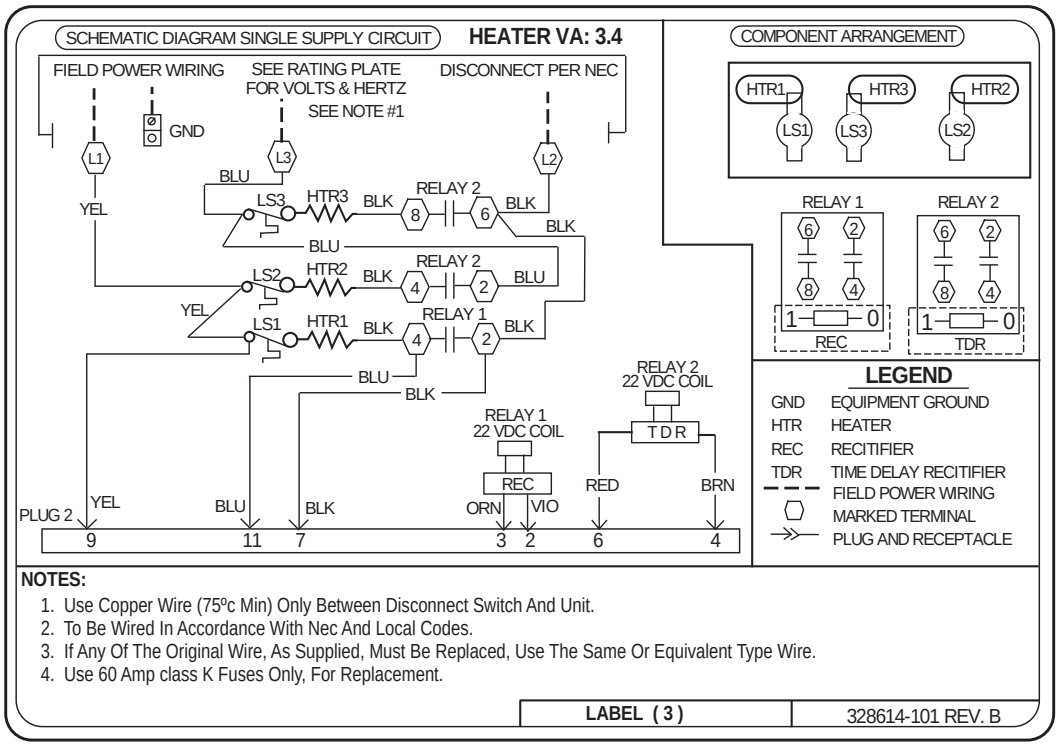

Fig. 5 – 328614-101

A07005

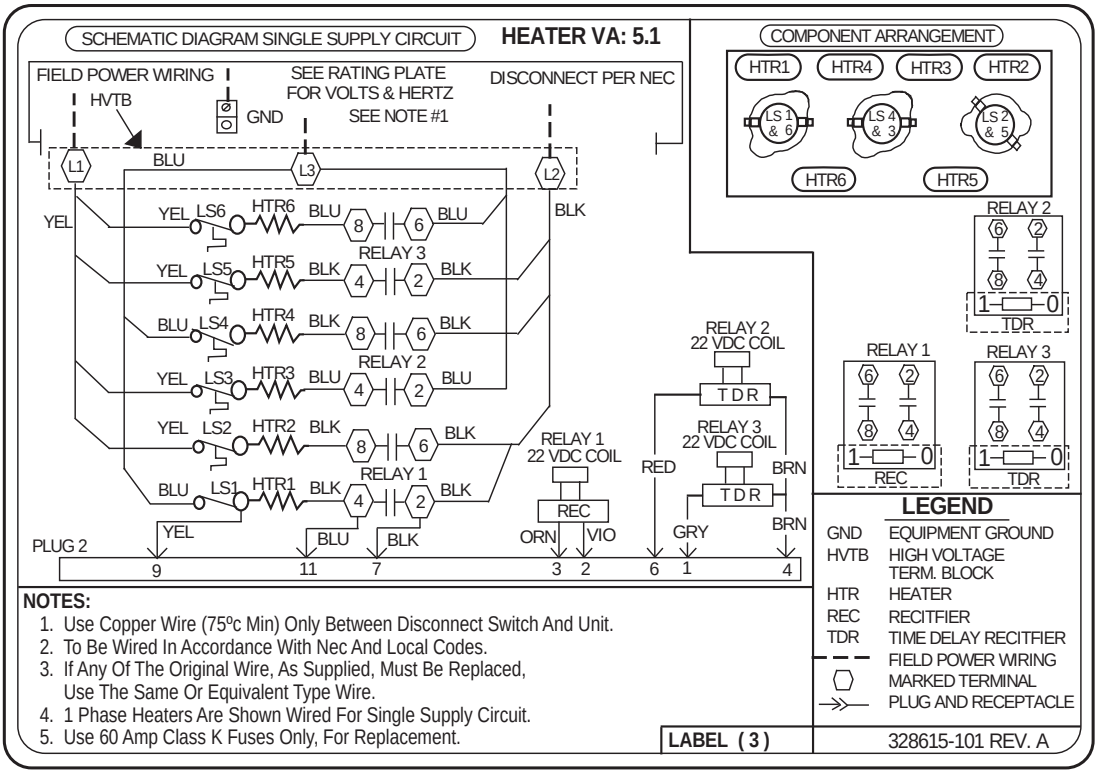

Fig. 6 – 328615-101

A07006

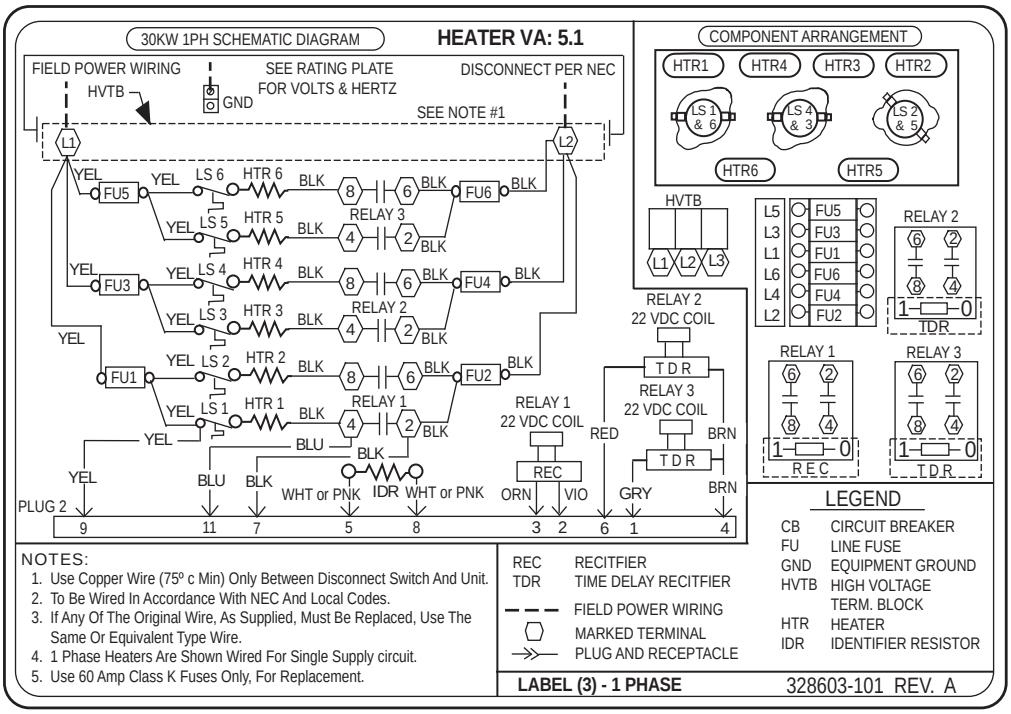

Fig. 7 – 328603-101

A07007

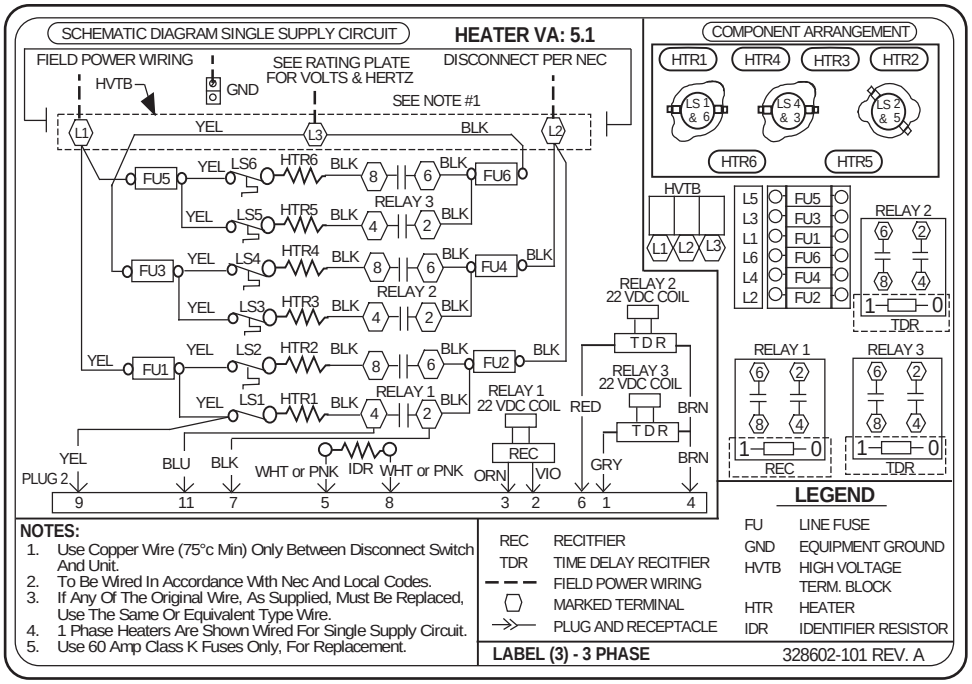

A07038

Fig. 8 – 328602-101

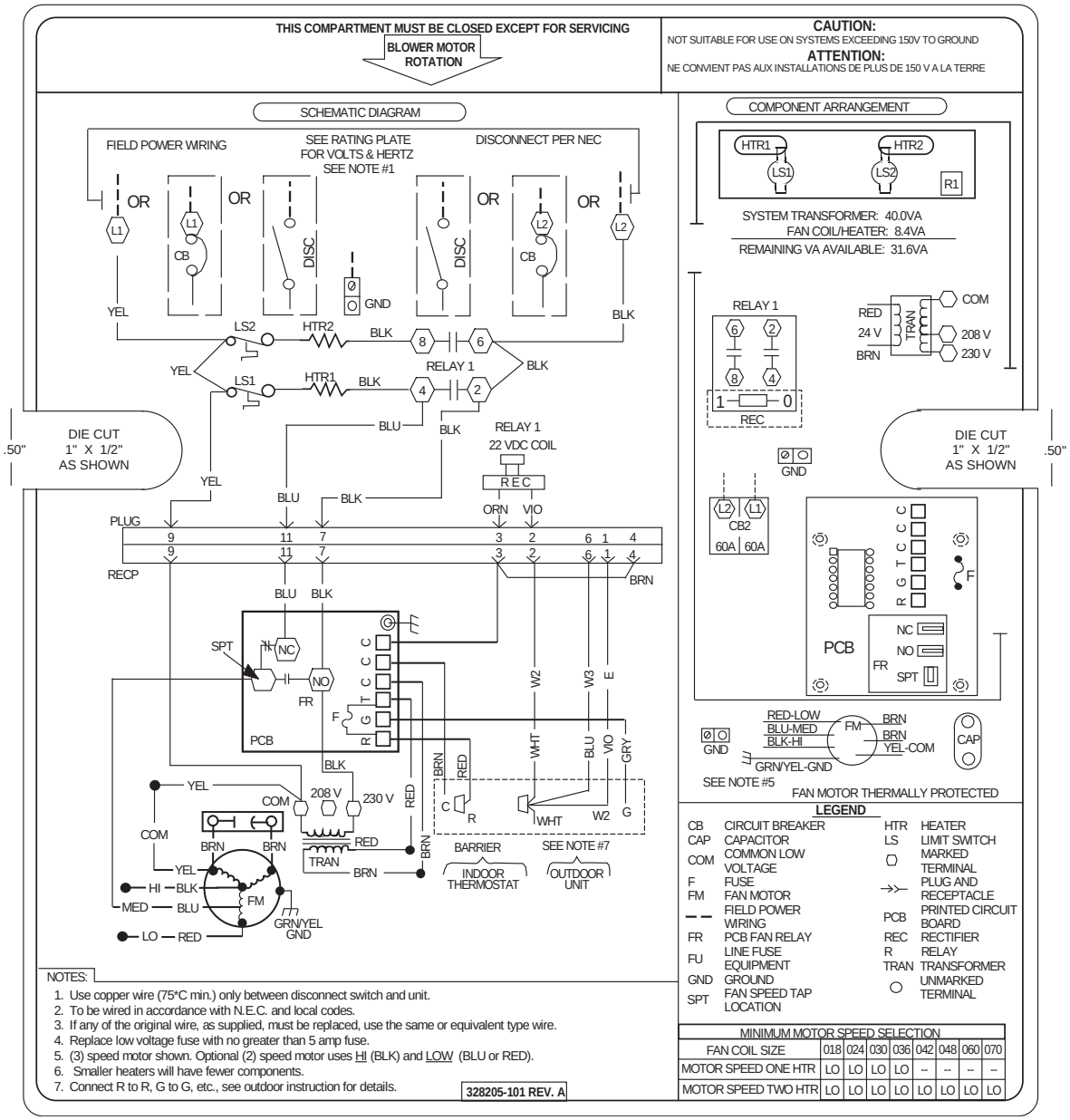

MINIMUM MOTOR SPEED SELECTION								
FAN COIL SIZE	018	024	030	036	042	048	060	070
MOTOR SPEED ONE HTR	LO	LO	LO	LO	--	--	--	--
MOTOR SPEED TWO HTR	LO	LO	LO	LO	LO	LO	LO	LO

Fig. 9 - 328205-101

A07008

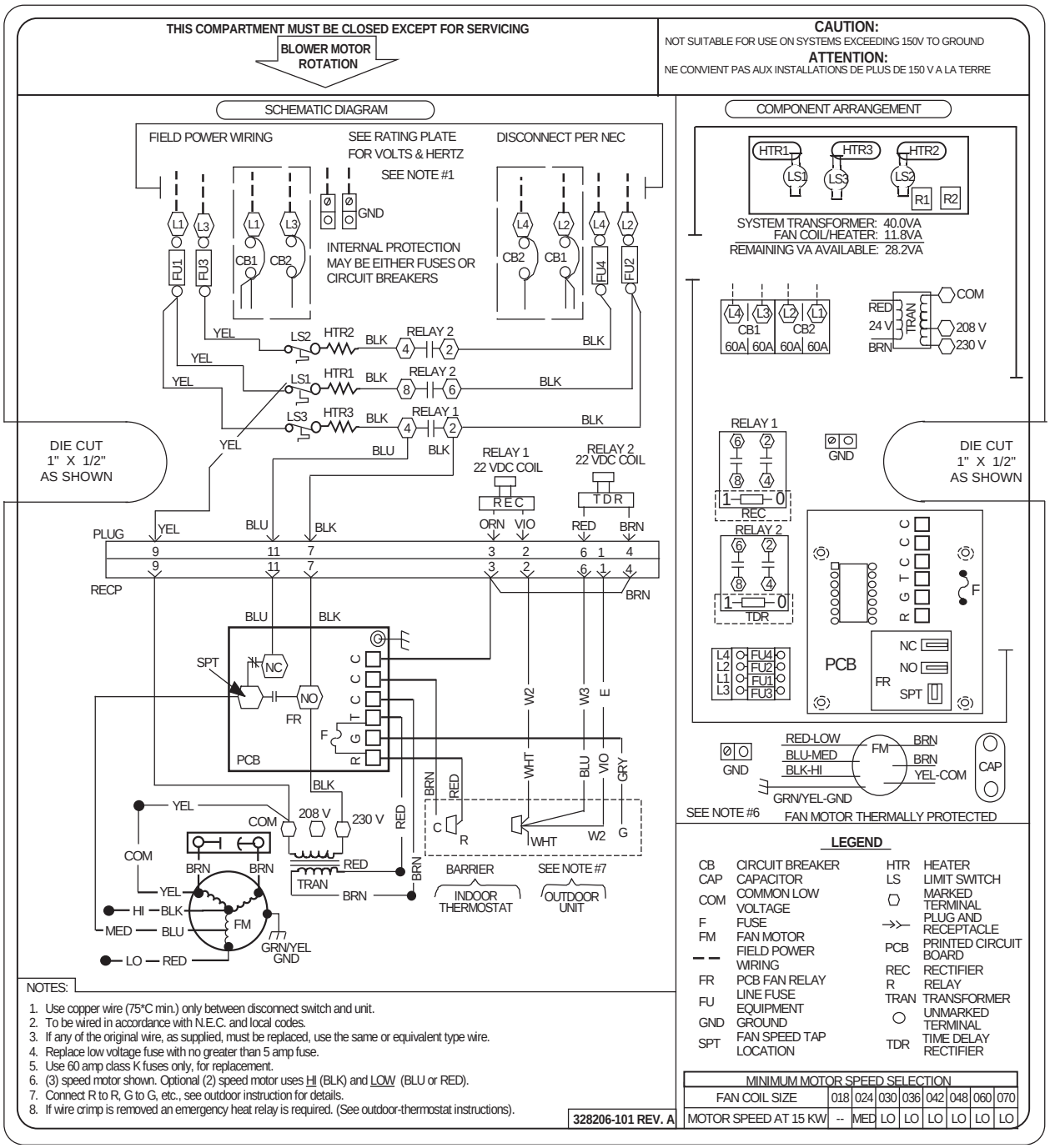

MINIMUM MOTOR SPEED SELECTION								
FAN COIL SIZE	018	024	030	036	042	048	060	070
MOTOR SPEED AT 15 KW	--	MED	LO	LO	LO	LO	LO	LO

Fig. 10 - 328206-101

A07009

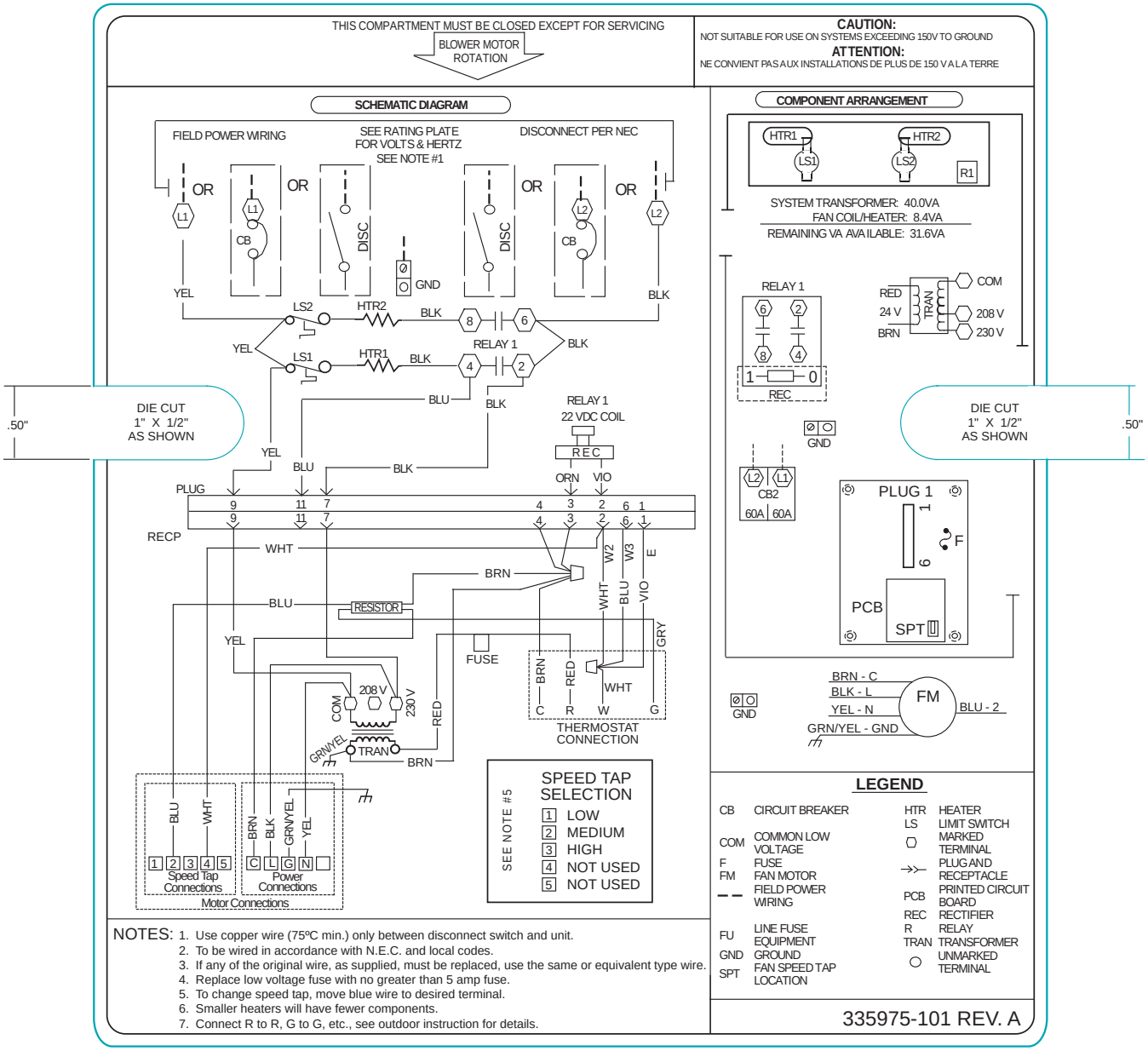

Fig. 11 - 335975-101

A12359

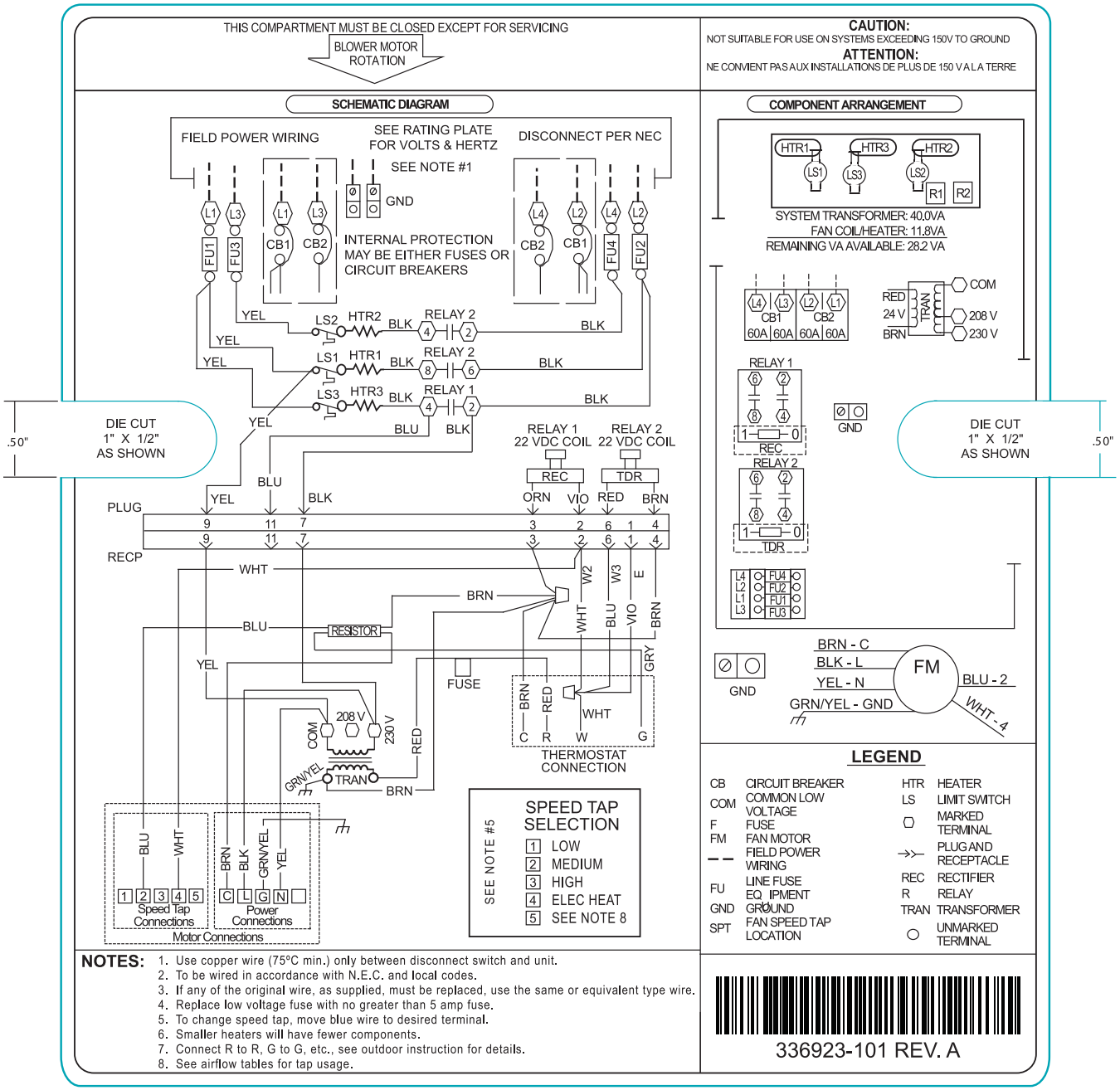

Fig. 12 - 336923-101

A12360

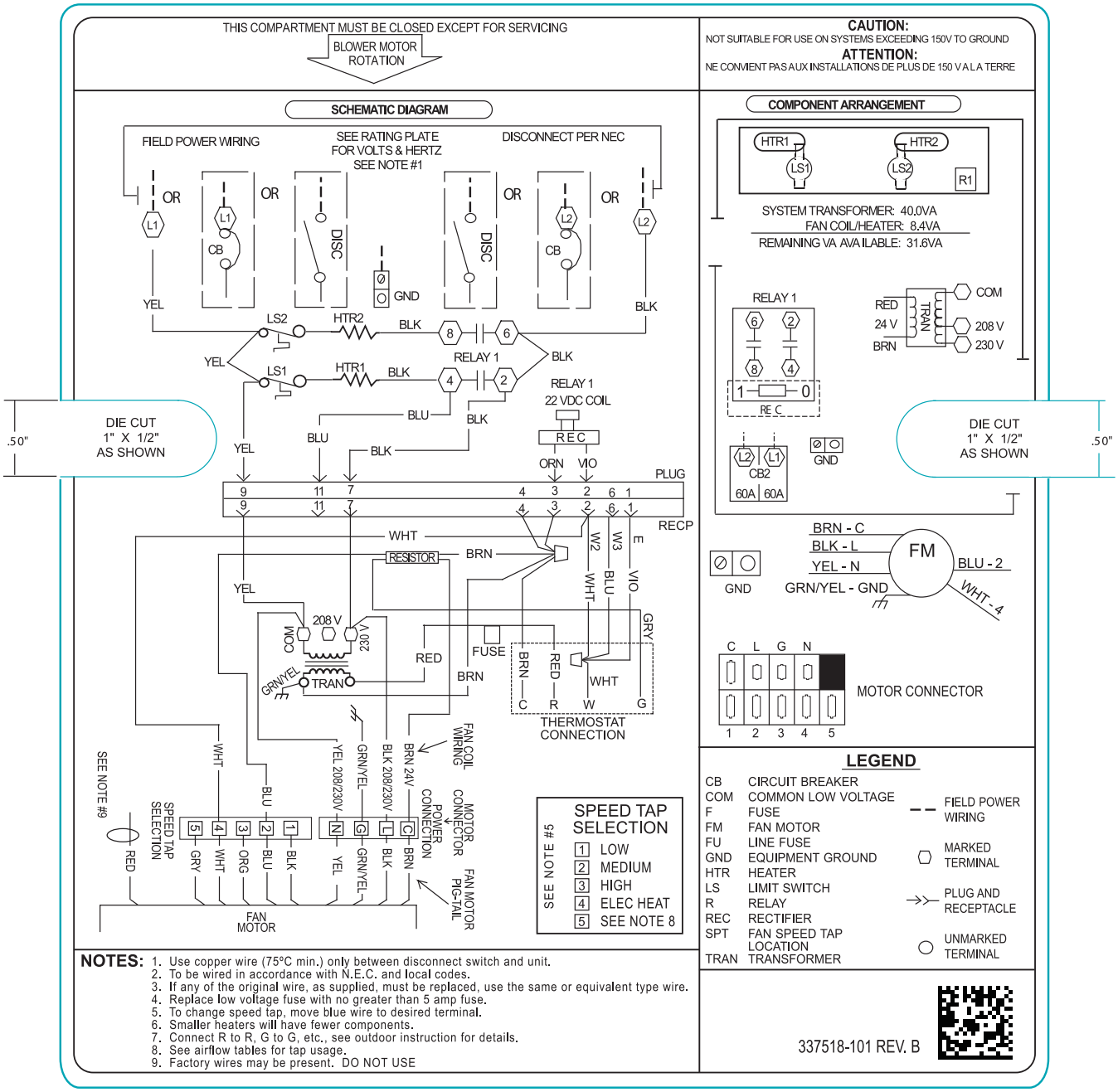

Fig. 13 - 337518-101

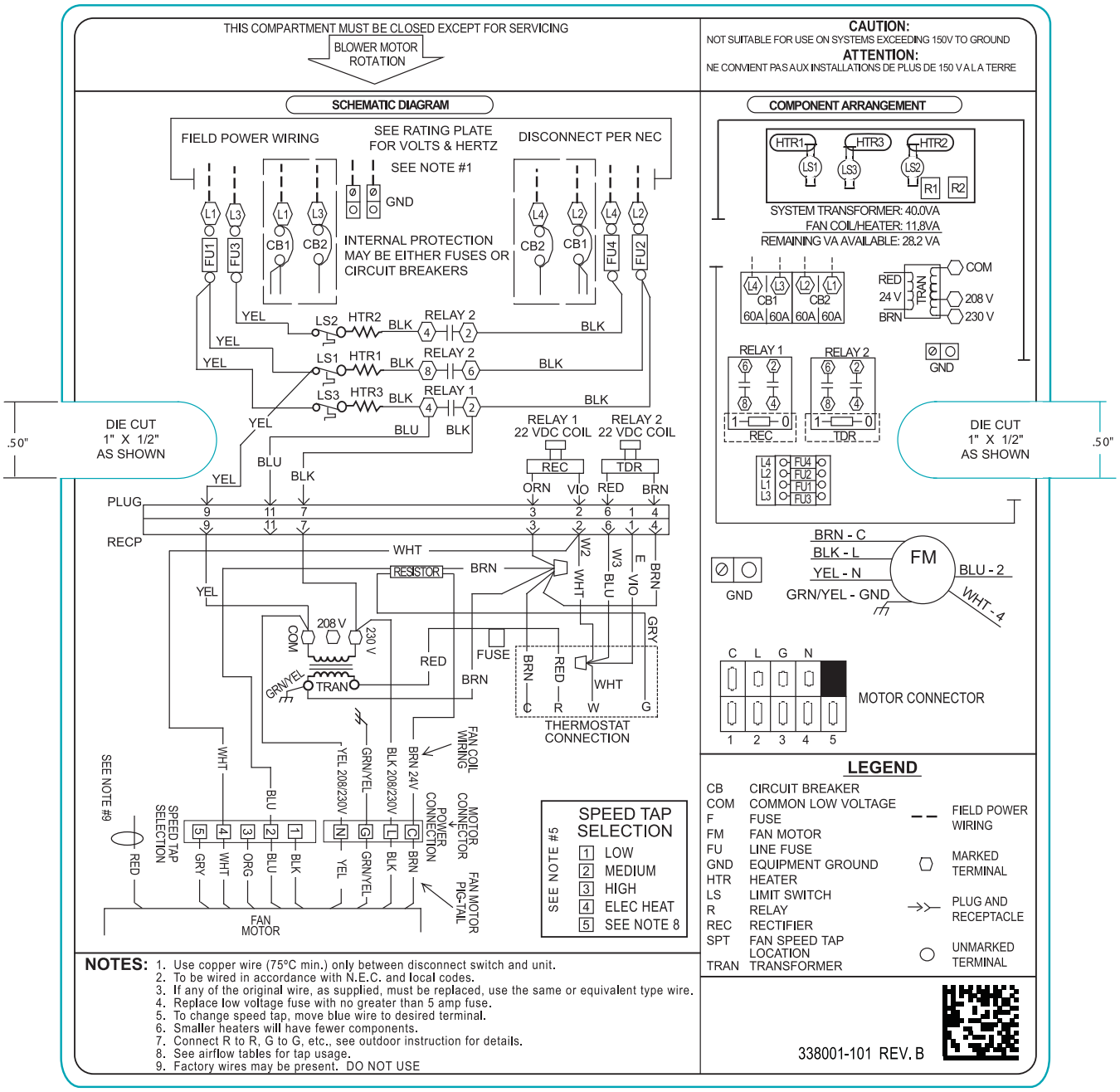

A12362

Fig. 14 - 338001-101

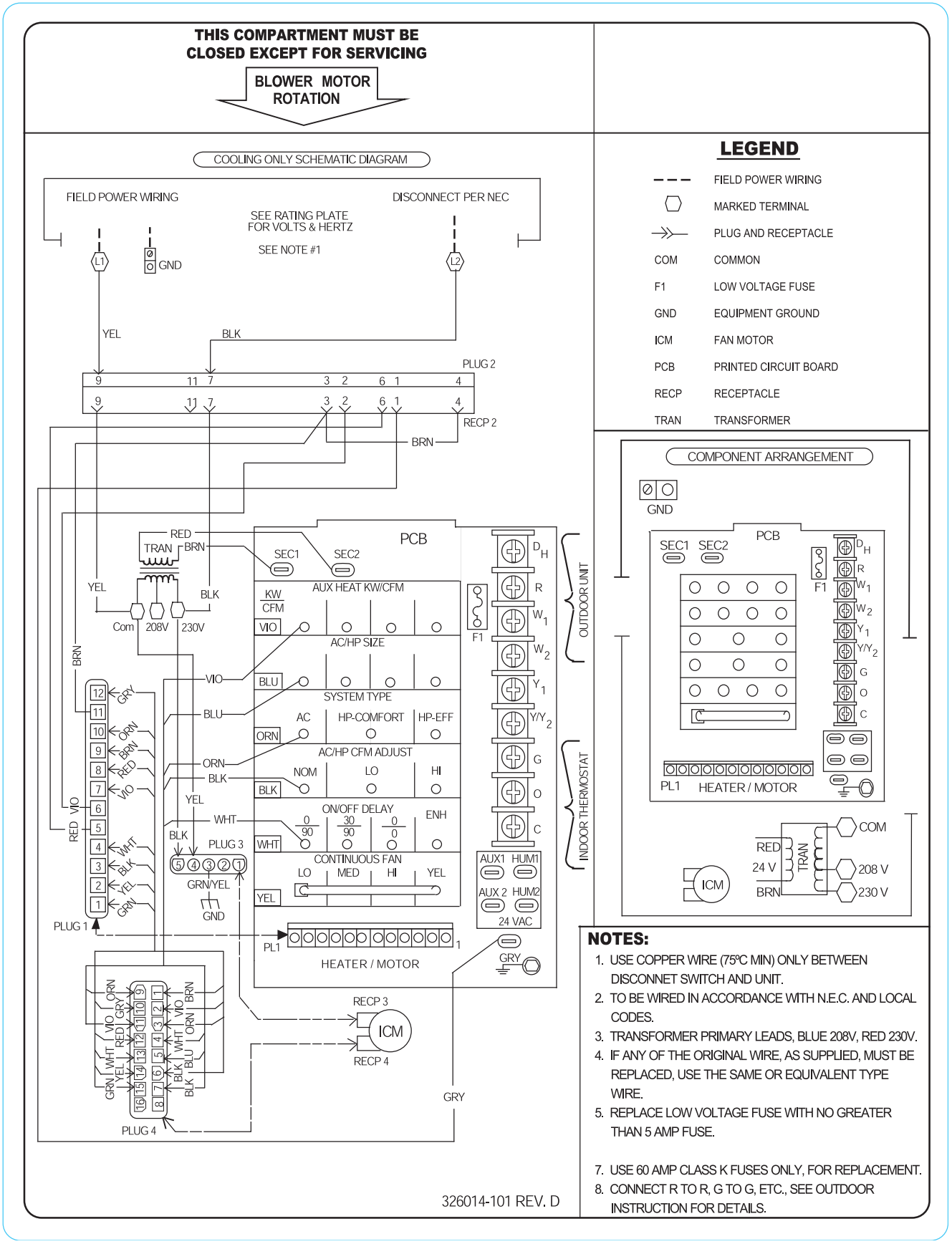

A07029

Fig. 15 - 326014-101

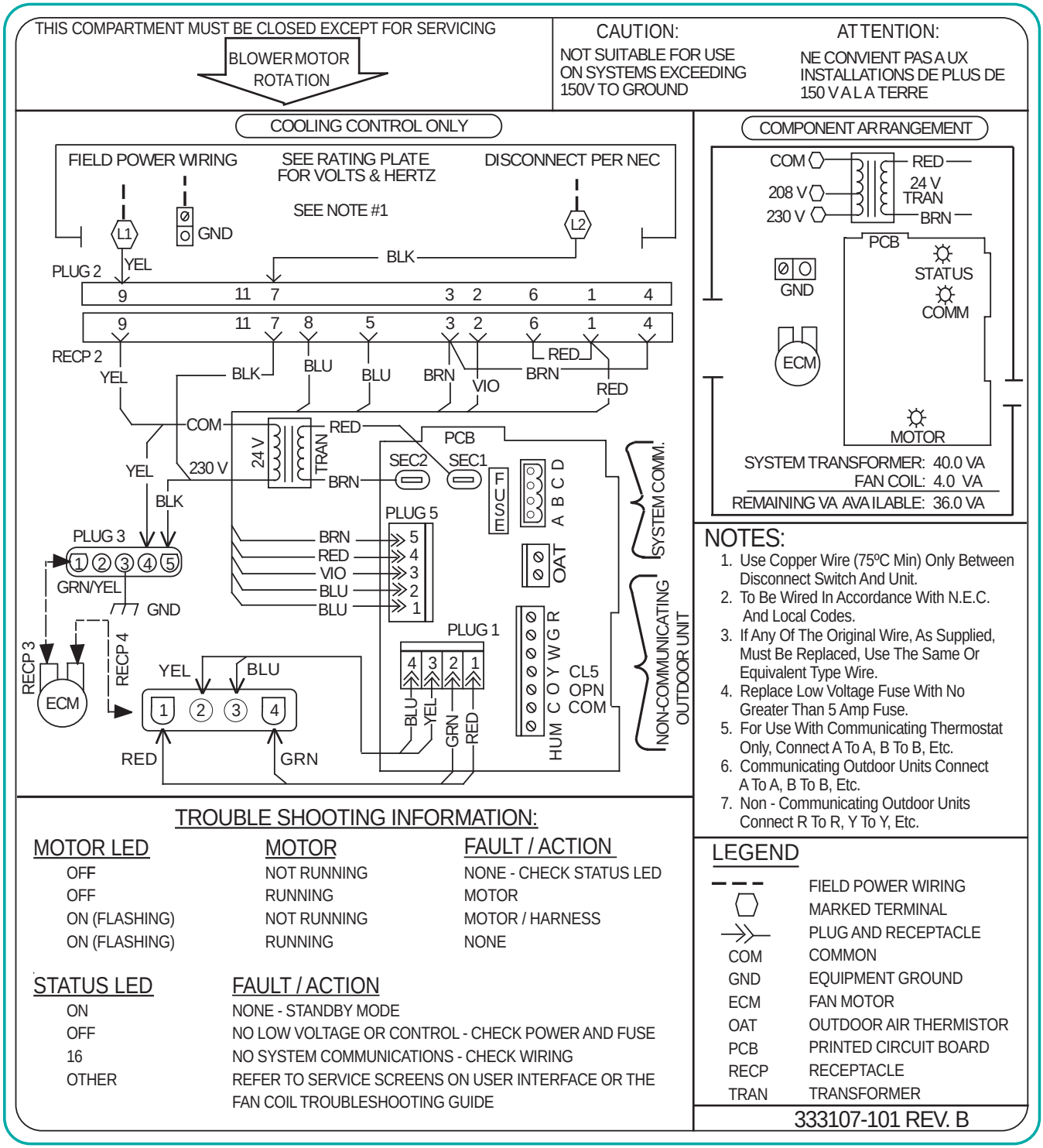

Fig. 16 – 333107-101

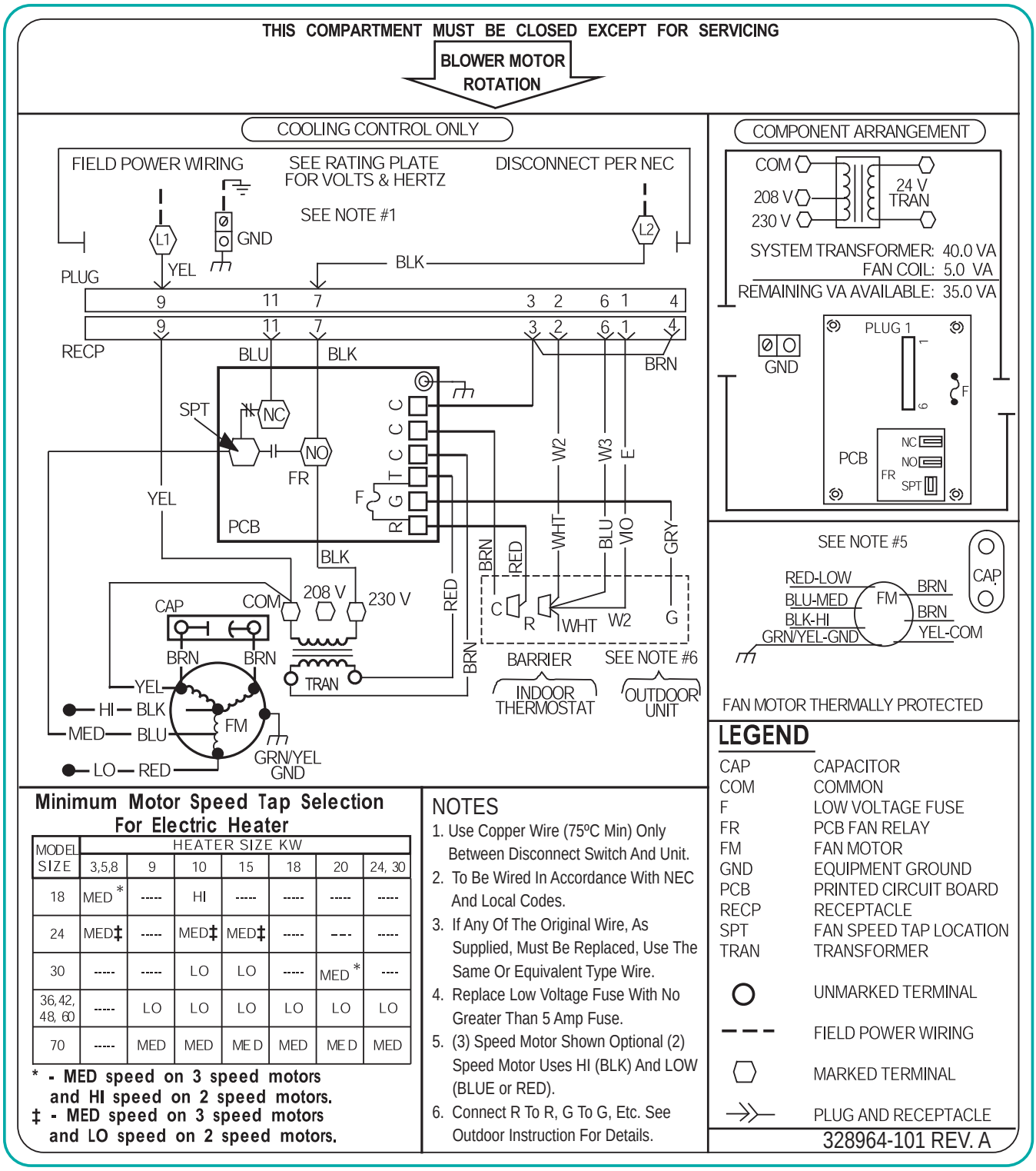

A07027

Fig. 17 - 328964-101

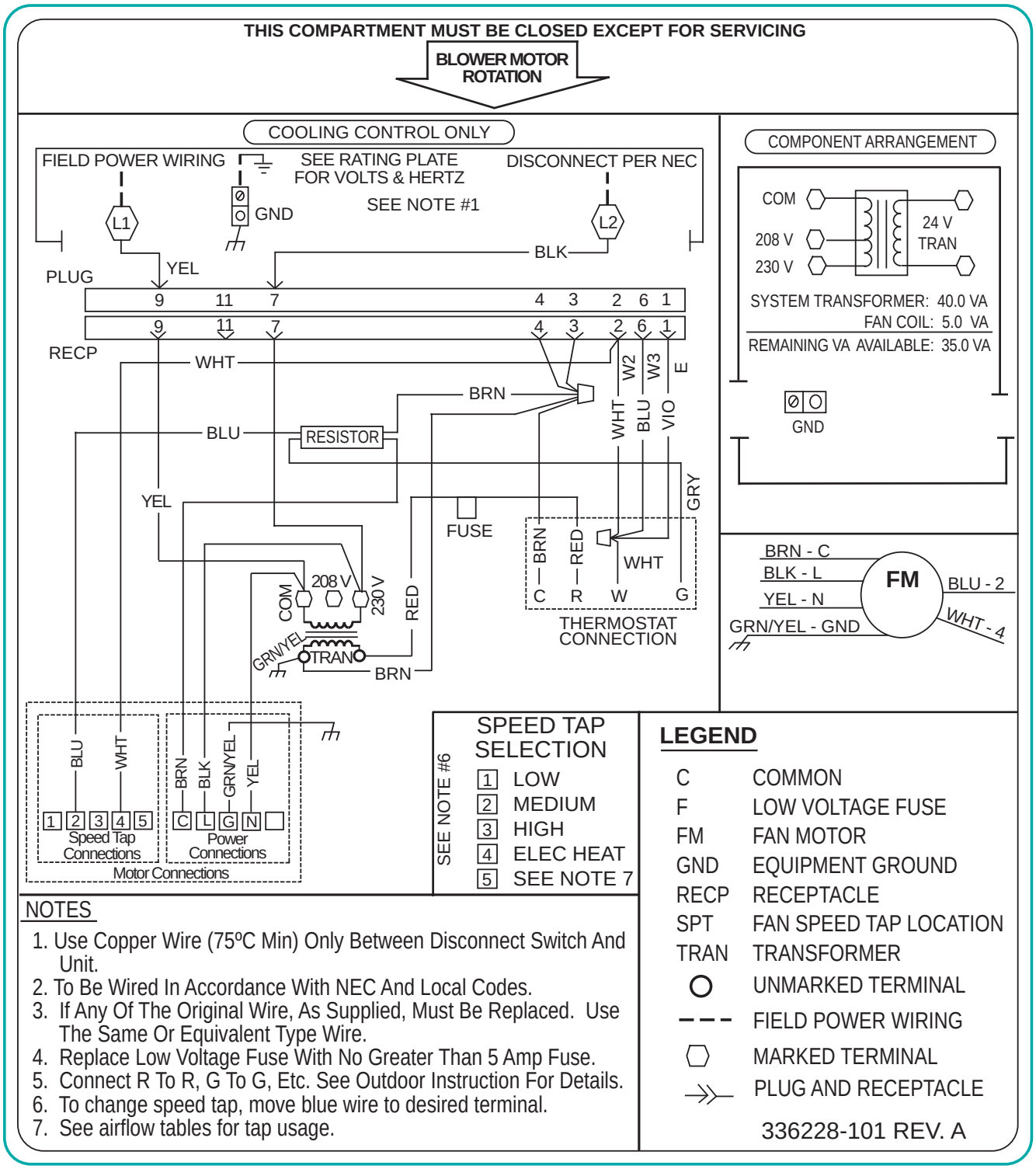

A12364

Fig. 18 – 336228-101

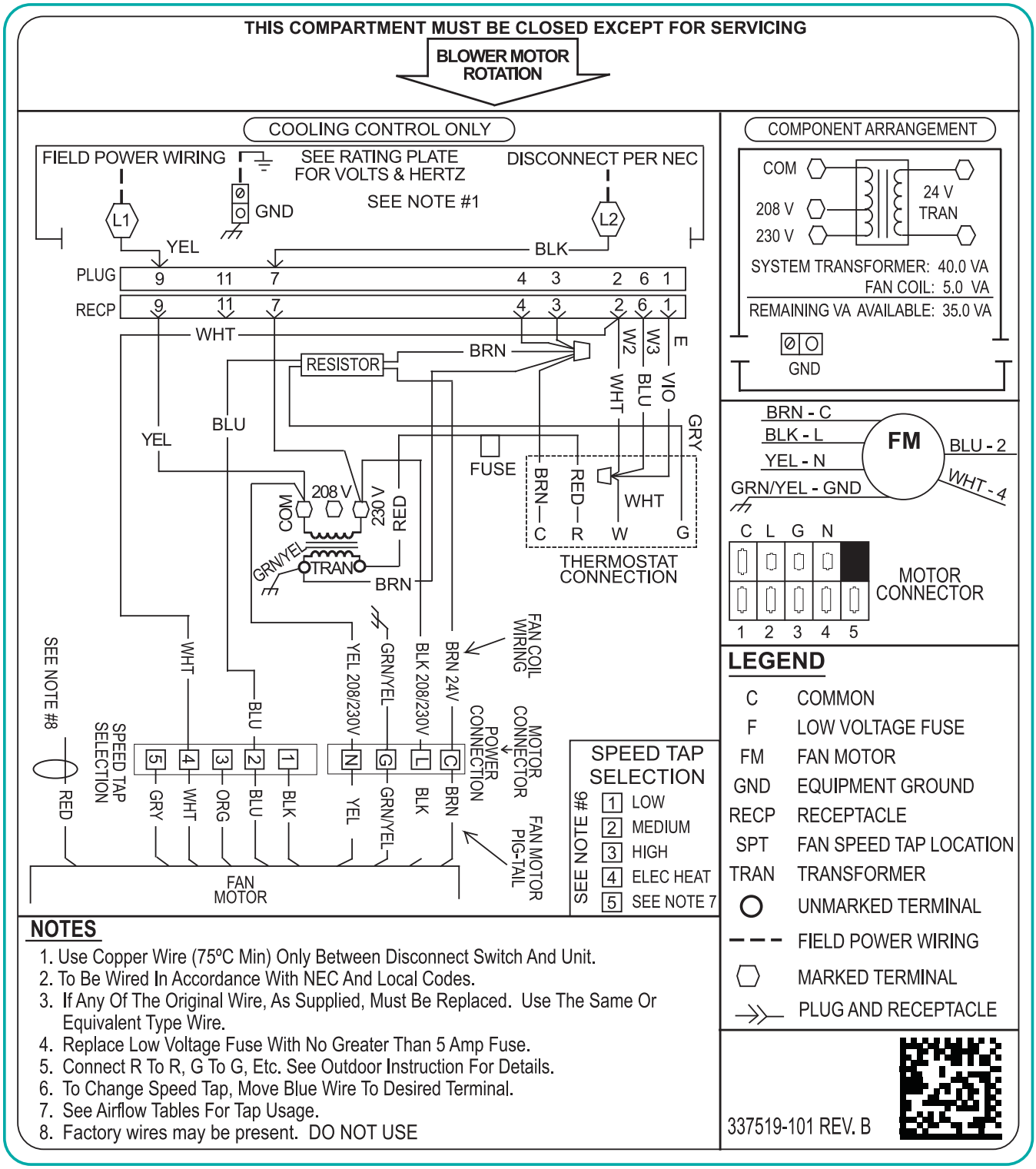

Fig. 19 - 337519-101

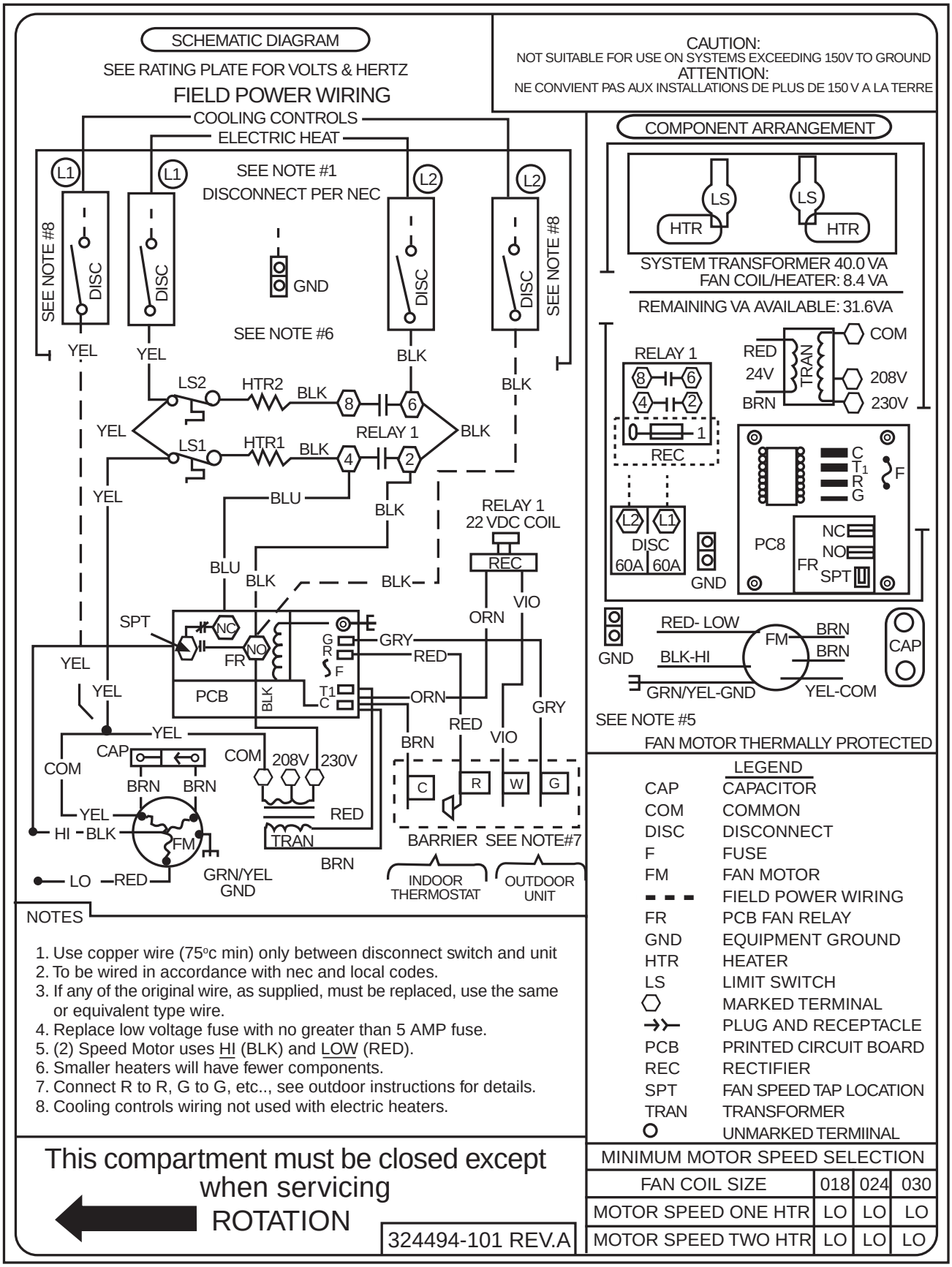

Fig. 20 - 324494-101

A00163

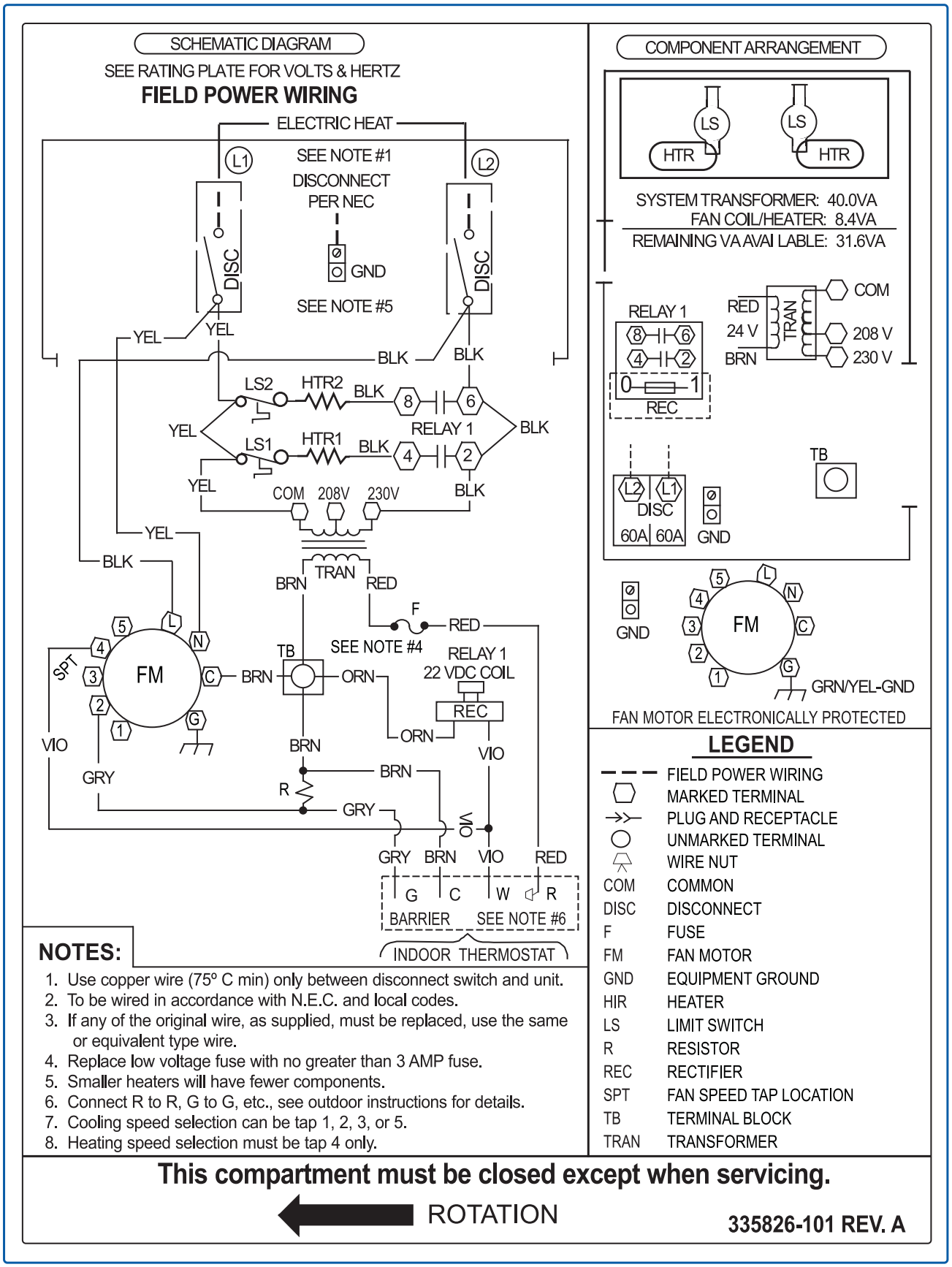

A09212

Fig. 21 - 335826-101

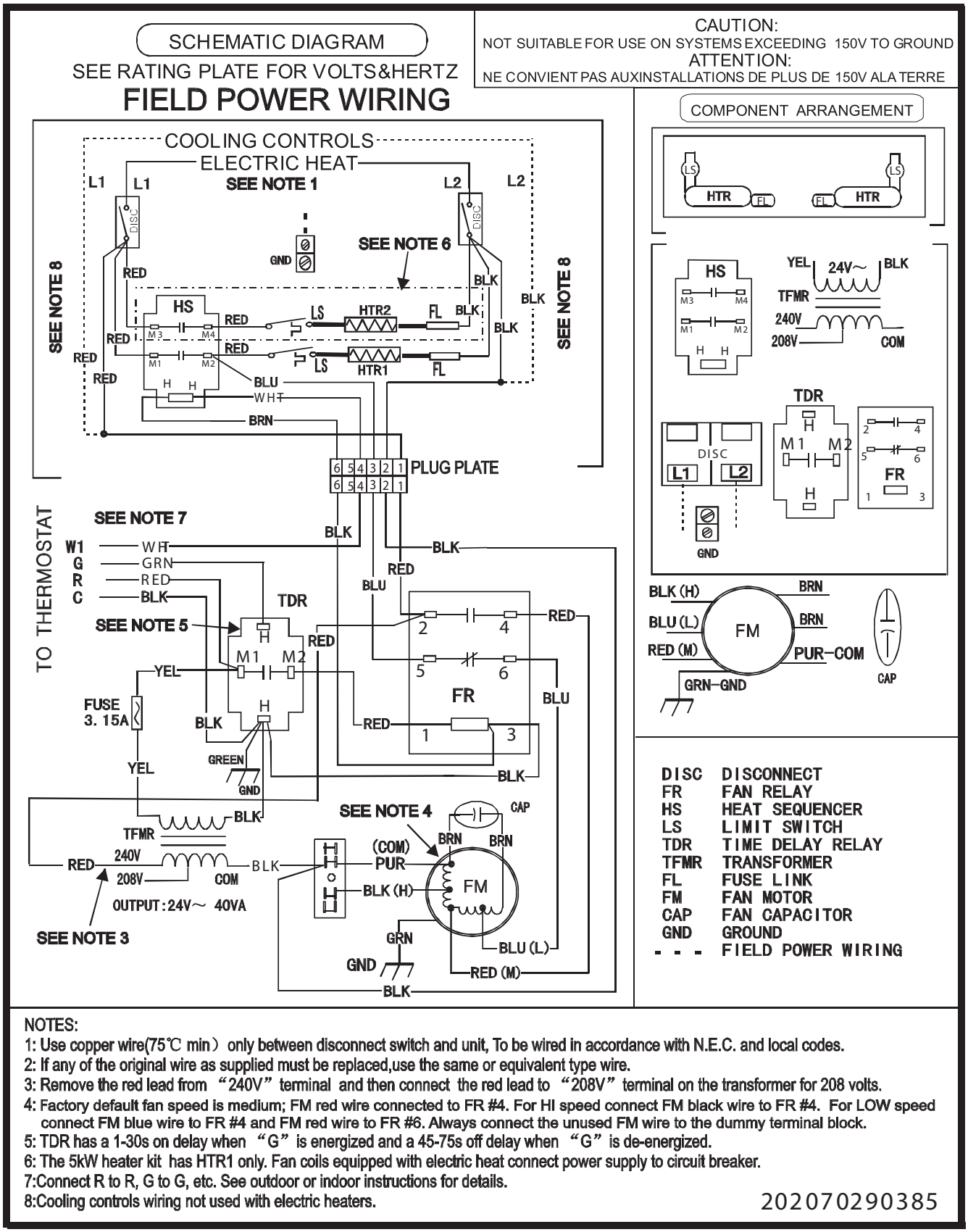

A13131

Fig. 22 – EHK2 Electric Heaters

Copyright 2013 CAC / BDP ● 7310 W. Morris St. ● Indianapolis, IN 46231
Edition Date: 02/13
Catalog No: WD–FANCOIL–02

Manufacturer reserves the right to change, at any time, specifications and designs without notice and without obligations.
Replaces: WD–FANCOIL–01