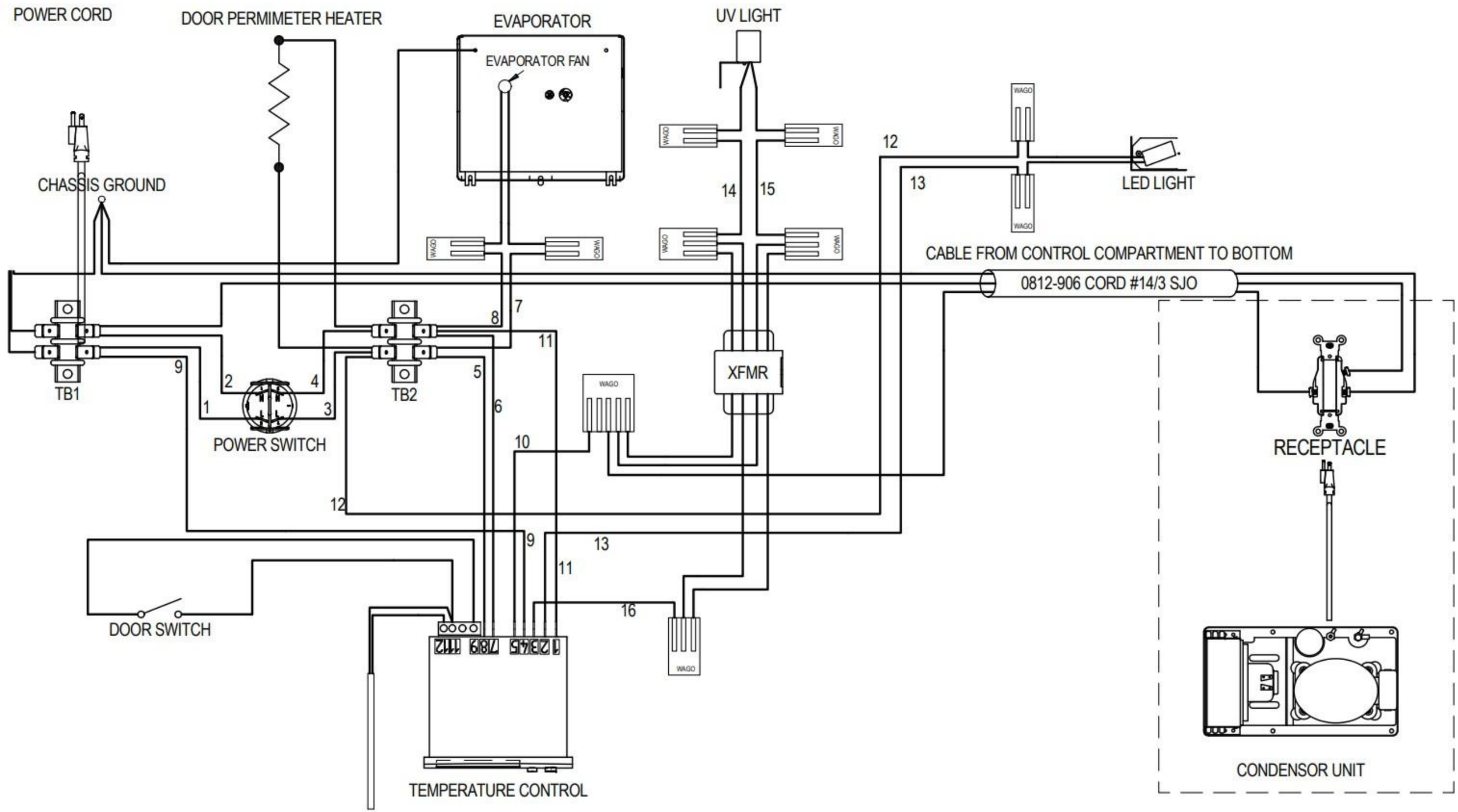
POWER CORD
DOOR PERMIMETER HEATER
EVAPORATOR
EVAPORATOR FAN
UV LIGHT
CHASSIS GROUND
LED LIGHT
CABLE FROM CONTROL COMPARTMENT TO BOTTOM
0812-906 CORD #14/3 SJO
TB1
TB2
POWER SWITCH
XFMR
RECEPTACLE
DOOR SWITCH
TEMPERATURE CONTROL
CONDENSOR UNIT
WAGO
1
2
3
4
5
6
7
8
9
10
11
12
13
14
15
16