CRES COR®
5925 Heisley Road • Mentor, OH 44060-1833

OPERATING and MAINTENANCE INSTRUCTIONS
Models: H137WS/H138WS Series Proof/Hot Cabinets

ELECTRICAL SPECIFICATIONS:

Model No.	Volts	Watts	Amps	Hertz	Phase	NEMA
H137WSUA12 H138WS1834	120	2000	16.6	60	1	5-20P
H137WSUA12208 H138WS1834208	208	2000	9.6	60	1	6-15P
H137WSUA12240 H138WS1834240	240	2000	8.6	60	1	6-15P

All are designed for AC service. The above model numbers may be followed by "***L***" or ending with "***S***".

HOW TO INSTALL UNIT:

1. Place cabinet near warm ovens. *DO NOT* place cabinet in drafty areas or near ventilating systems.
2. Plug end into proper wall outlet.
3. Fill water pan.
   - Lift off cover.
   - Fill with 3-1/2 qts.(3.3 liters) of clean, hot water. Replace cover.

⚠ CAUTION **Use of treated or soft water may be required for proper operation and to maintain warranty.**

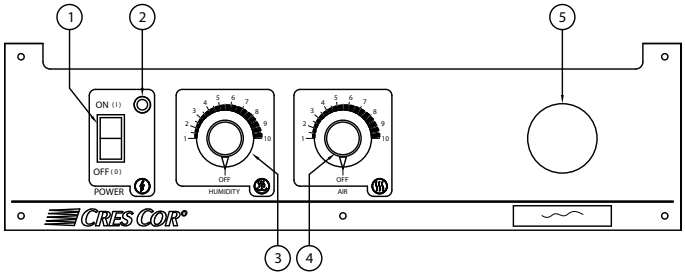

CONTROL PANEL PARTS IDENTIFICATION

1. Switch-Power
2. Pilot Light-Power
3. Thermostat-Humidity
4. Thermostat-Air
5. Thermometer

HOW TO PROOF:

1. Fill water pan (See "How to Install")
2. Push "POWER" switch to "ON." The yellow light will come on.
3. Turn "HUMIDITY" dial to No. 10.
4. Turn "AIR" dial to "OFF."
5. Preheat for 30 minutes. "
6. Put fresh or fully thawed dough into cabinet.
7. Turn "HUMIDITY THERMOSTAT" to No. 9.

NOTE: The cabinet temperature will drop temperature inside cabinet if cold dough is added.

Do <u>NOT</u> put frozen dough into cabinet

NOTE: No 9-10 setting will give you a temperature of 95°F/35°C, and 90-95% humidity. Experiment with different "HUMIDITY" and "AIR" settings to get the exact temperature and humidity you need. The thermometer display will flash when cabinet is below 140°F/60°C.

NOTE: Check water level in water pan if you are proofing longer than 90 minutes. Fill with clean, hot water.

CRES COR®
5925 Heisley Road • Mentor, OH 44060-1833

OPERATING and MAINTENANCE INSTRUCTIONS
Models: H137WS/H138WS Series Proof/Hot Cabinets

HOW TO HOLD

1. Push "POWER" switch to "ON." The yellow light will come on.
2. Turn "AIR" dial to temperature needed.

NOTE: No. 8 is about 175°F/79°C
No. 6 is about 145°F/63°C
No. 4 is about 115°F/46°C

Proper food holding temperature is 140°F (60°C) or higher. The thermometer display flashes when the center of the cabinet is below 140°F/60°C or above 250°F/121°C. Call the factory if you need different settings.

3. Turn the "HUMIDITY" dial to "OFF".
4. Preheat cabinet for 30 minutes.
5. Put food into cabinet.

HOW TO HOLD WITH HUMIDITY:

1. Fill water pan (see "How to Install").
2. Push "POWER" switch to "ON". The yellow light will come on.
3. Turn "AIR" dial to No. 10.
4. Preheat cabinet for 30 minutes.
5. Turn "AIR" and "HUMIDITY" dial to No. 10.
6. Preheat cabinet for an additional 15 minutes.
7. Turn "AIR" dial to temperature needed.

NOTE: No. 8 is about 185°F/85°C
No. 6 is about 160°F/71°C
No. 4 is about 130°F/54°C

Proper food holding temperature is 140°F (60°C) or higher. The thermometer display flashes when the center of the cabinet is below 140°F/60°C or above 250°F/121°C. Call the factory if you need different settings.

8. Turn the "HUMIDITY" dial to desired humidity. At 175°F/80°C, No. 9 setting on the "Humidity" dial is about 25% relative humidity.

NOTE: Higher numbers give higher humidity at the same temperature.

NOTES: Experiment with different settings to get the exact temperature and humidity required.
Check water level in water pan if holding more than 2-1/2 hours.
Fill pan with hot water

HOW TO TURN UNIT "OFF":

Turn "POWER" switch to "OFF".

MAINTENANCE:

HOT UNIT REMOVAL INSTRUCTIONS:

1. Unplug power cord from wall outlet.
2. Pull entire unit out the front of the cabinet. You may have to remove a screw in the back of the cabinet above the cord.

⚠ WARNING

BEFORE CLEANING THE CABINET:

1. **Allow cabinet to cool.**
2. **Remove Hot Unit from cabinet.**
3. **Do NOT use abrasives or harsh chemicals.**

Cleaning Notes:

1. Wipe up spills as soon as possible.
2. Clean cabinet regularly to avoid heavy dirt build-up.
3. Make a test spot with cleaner.
4. Follow manufacturer's directions on cleaner.
5. Do not mix cleaners.
6. Avoid drips and splashes.
7. Empty water pan at least once a week.
8. Leave doors open to fully dry the cabinet.

⚠ CAUTION **DELIME OR DESCALE RESERVOIR PARTS AS REQUIRED TO PREVENT DAMAGING BUILD-UP.**

WARRANTY COVERAGE MAY BE AFFECTED WITHOUT PROPER CLEANING.

OPERATING and MAINTENANCE INSTRUCTIONS
Models: H137WS/H138WS Series Proof/Hot Cabinets

HOW TO CLEAN UNIT:

	Soil	Cleaner	Method
CABINET Stainless Steel	Dirt	Mild detergent* and hot water, or mild abrasive cleaner.	1. Use soft, damp cloth. 2. Rinse with hot water. 3. Wipe dry.
		Steam (No strong alkaline additive)	1. Rinse after steam cleaning. 2. Wipe dry.
	Fingerprints, Grease and Oil	Chemical oven cleaner for cabinet material	Follow oven cleaner manufacturer's directions
		Mild abrasive cleaner; oily or waxy cleaner	Apply with clean, soft cloth. Wipe with damp cloth.
	Water Spots	Mild abrasive cleaner. Oily or waxy cleaner.	Apply with soft, clean cloth. Wipe with damp cloth.

**Mild detergents include soaps and non-abrasive cleaners.*

TROUBLE-SHOOTING CHART:

FAILURE	POSSIBLE CAUSE
1. Indicator lights do NOT light.	1a. Circuit breaker/fuse to wall outlet blown. 2a. Cord unplugged from wall outlet or cabinet. 3a. Switch is "OFF."
2. Unit does not heat	2a. Thermostats set too low or are off. 2b. Switch is "OFF."
3. Unit gets too hot or won't shut off	3a. Defective electrical parts. *3b. UNPLUG UNIT FROM WALL OUTLET*
4. Humidity is low.	4a. Water in pan may be low 4b. Thermostat set too low
5. Blower does not work or makes noise.	5a. Defective Blower

NOTE: Digital thermometer will flash if cabinet temperature is below 140°F or above 250°F.
Call the Factory if you need different settings.

If cause is none of the above, refer to our list of Authorized Service Centers, FL-1400.

CRES COR®
5925 Heisley Road • Mentor, OH 44060-1833

OPERATING and MAINTENANCE INSTRUCTIONS
Models: H137WS/H138WS Series Proof/Hot Cabinets

REPLACEMENT PARTS:
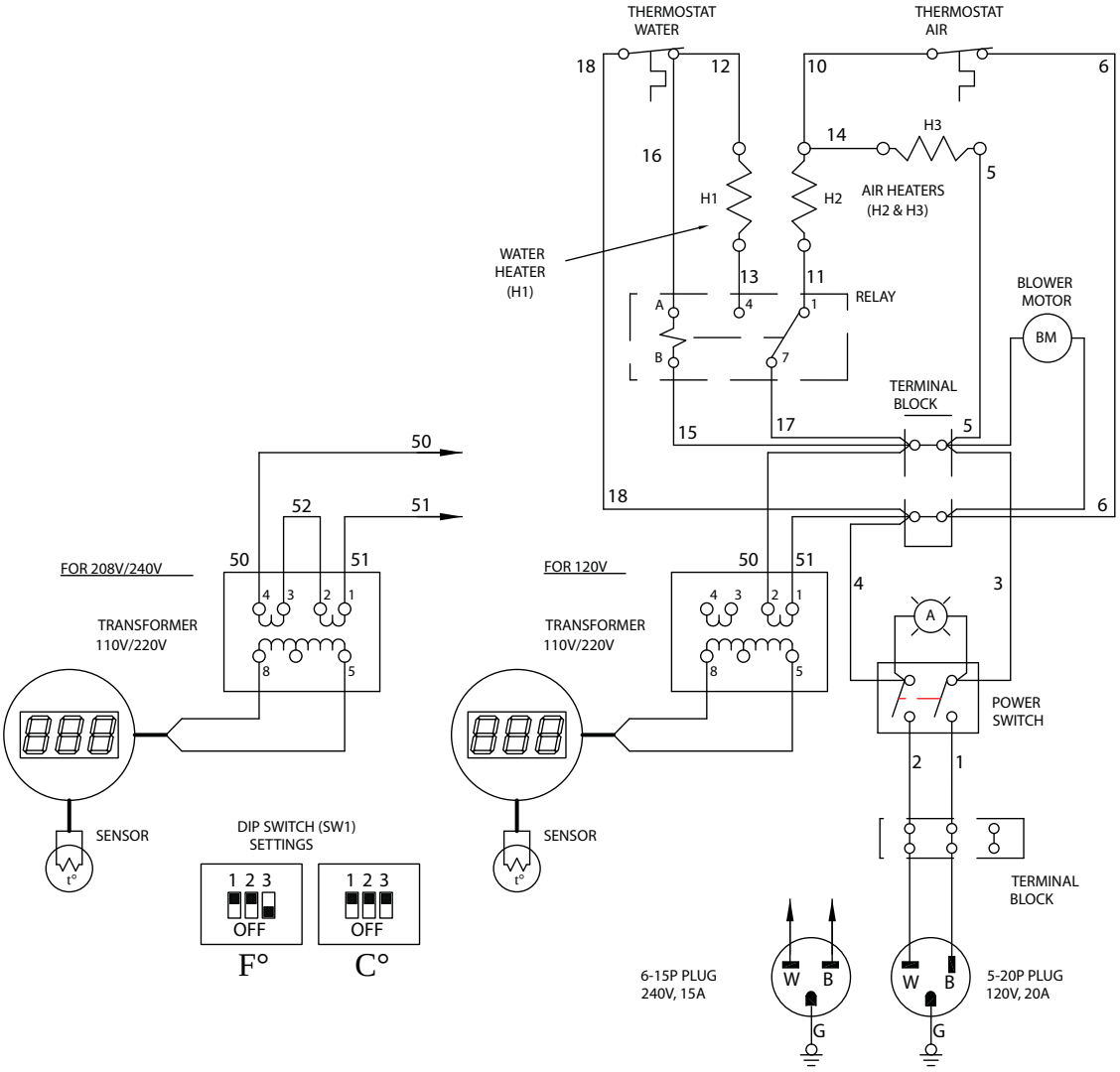
DESCRIPTION	Qty.	120 VOLT	208 VOLT	240 VOLT
Proof/Hot Unit (Stainless St., 23.5” W)	1	0747-061	0747-063	0747-062
Heater (Reservoir)	1	0811-005-K	0811-015-K	0811-251
Pan (Reservoir)	1	1019-002	1019-002	1019-002
Heater (Air)	2	0811-214	0811-215	0811-215
Thermostat Kit	2	0848-062-K	0848-062-K	0848-062-K
Power Cord	1	0810-093	0810-039	0810-039
Pilot Light (Power)	1	0766-094	0766-095	0766-095
Switch (Power)	1	0808-116	0808-116	0808-116
Blower Kit	1	0769-180-K	0769-182-K	0769-182-K
Relay	1	0857-100	0857-102	0857-102
Thermometer Kit (Digital °F)	1	5238-034-K	5238-034-K	5238-034-K
Transformer, 110-220V only	1	0759-159	0759-159	0759-159
Thermometer Kit (Digital °C)	1	5238-034-K1	5238-034-K1	5238-034-K1