CONNERTON

Installation, Operation & Maintenance Instructions

Kabob Series Manual

For Your Safety

Do NOT store or use gasoline or other flammable vapors and liquids in the vicinity of this, or any other equipment.

⚠ Warning!

Improper installation, adjustment, alteration, service or maintenance can cause property damage, injury or death. Read the installation, operation and maintenance instructions thoroughly before installing or servicing this equipment.

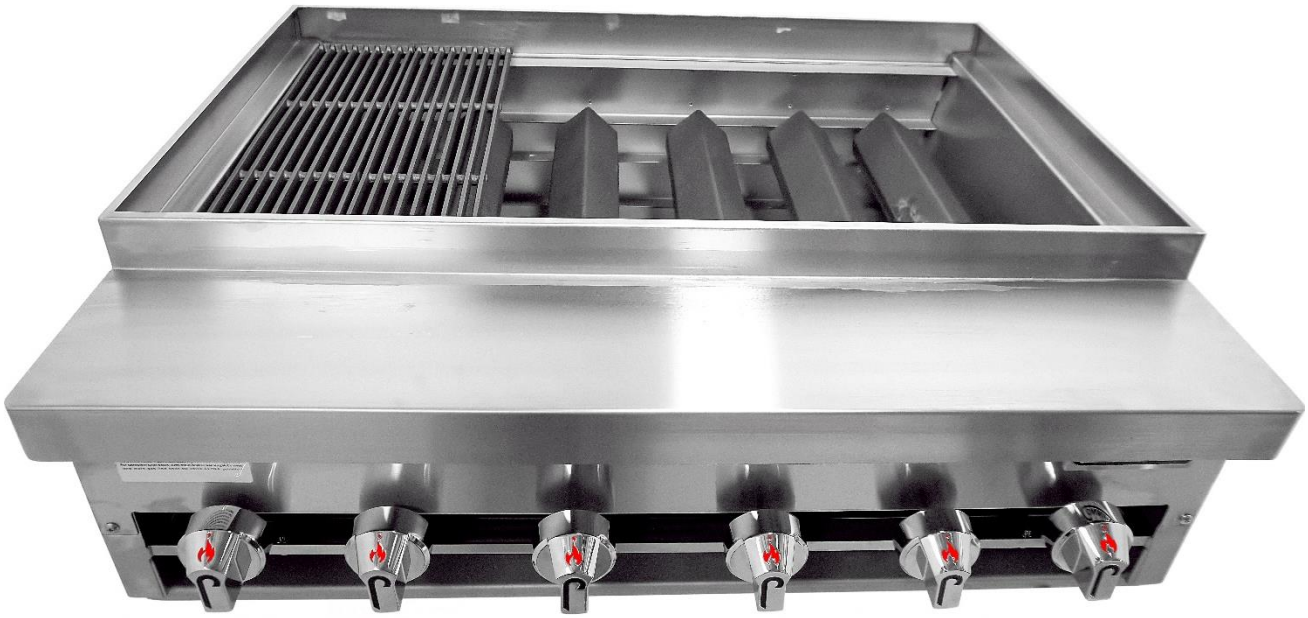

11990 Rivera Rd. Santa Fe Springs, CA 90670

Telephone:(714) 547-9218 (562) 464 - 9901

www.connertoncooking.com

To Purchaser

After installation of your broiler, immediately contact your local gas supplier to obtain information in the event the user of your equipment smells gas. This information must be posted in a prominent location.

To User

RETAIN THIS MANUAL FOR FUTURE USE

Upon receipt of this broiler, inspect it thoroughly for any damage which may have occurred during shipment. If damage is observed, contact the delivery agency immediately.

1- **Preparation For Installation:** Safe and satisfactory operation of the broiler depends, to a great extent, upon its proper installation. It should be installed in accordance with the National Fuel Gas Code **Z223.1**, these instructions, and applicable State and Local Codes.

The installation must be done by a licensed plumber.

A gas pressure regulator is supplied with your broiler. The regulator must be installed before connecting the broiler to the gas supply line. Please note that air vent can plug with grease, thereby shutting gas supply off. Install regulator in a drip-free area.

The broiler and its individual shutoff valve must be disconnected from the gas supply piping system during any pressure testing of that system at test pressures in excess of 1/2 psig (3.45 kPa).

The broiler must be isolated from the gas supply piping system by closing its individual manual shutoff valve during any pressure testing of the gas supply piping system at test pressures equal to or less than 1/2 psig (3.45 kPa).

Radiant(s) rest on the front and rear tabs over the burners.

2- **Clearances And Ventilation:** This broiler is designed for installation in non-combustible locations with 0-inch clearance from sides and back.

Keep equipment area free and clear from combustibles.

The area in front of and above the broiler must be clear to avoid obstruction of flow of combustion and ventilation air. Means must be provided for adequate air supply and adequate clearance for air openings into the combustion chamber.

Adequate clearances must be provided in front and sides of the broiler for servicing and proper operation.

It is important that the broiler be installed under an exhaust hood which is adequate to remove the products of combustion and cooking vapor. Sufficient make-up air must also be provided to the space where the broiler is located to replace that removed through the exhaust hood.

3- Gas Piping: Make sure the gas pressure regulator supplied with the broiler is installed correctly. Connect outlet side of regulator to broiler. The regulator is set at 4 inches w.c. on natural gas and 11 inches w.c. on propane gas. A 1/8" pressure tap is provided on the gas manifold at the front of the broiler for checking the gas pressure.

Please note that air vent on regulator can plug with grease, thereby shutting gas supply off. Install regulator in drip-free area.

Connect the broiler to the gas supply line. Under no circumstances should the gas supply line be smaller than the inlet pipe on the broiler. A gas shutoff valve must be installed in the gas supply line upstream of the broiler for complete shutdown and service. Use pipe sealant on all pipe joints. Sealant must be resistant to the action of L.P. gases.

For proper performance, the broiler must be level. If legs are provided, adjust feet at bottom of legs to level broiler. If legs are not provided, seal the base of the broiler to the countertop with silicone. If the broiler is supplied with casters, the installation must be made with a connector that complies with the Standard for Connectors for Movable Gas Appliances **ANSI Z21.69**, and a quick-disconnect device that complies with the Standard for Quick-Disconnect Devices for Use with Gas Fuel, **ANSI Z21.41**. Adequate means must be provided to limit the movement of the broiler without depending on the connector and the quick-disconnect device or its associated piping to limit the broiler's movement. Restraining devices should be connected to legs or back of body.
IMPORTANT: Check all gas connections for leaks, using a soap and water solution. DO NOT USE AN OPEN FLAME FOR CHECKING PURPOSES

4- Lighting And Relighting of Broiler:
Turn all burner valves and pilot valves to "OFF". Wait 5 minutes.
Turn on pilot valves and light pilots. Adjust flame height to approximately 1/2".
Turn on burner valves to operate your broiler.
For complete shutdown, turn off all valves and the gas shutoff valve located upstream of the broiler.
To relight, repeat the above procedures.

5- Care And Maintenance:
Contact factory, factory representative, or a local service company to perform maintenance and repairs. **Please Note: Contact factory before any warranty repairs are made.**
To clean top grate, use warm water, a mild cleanser and wire brush.
At least once per day, clean and empty the grease pan.
Periodically, but not less than once every 3 months, clean burner orifices using warm water and wire brush. *Make sure the equipment is cold before removing burners and orifices.*

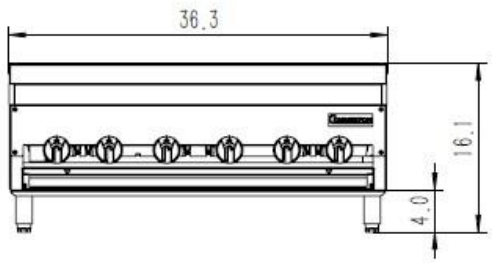

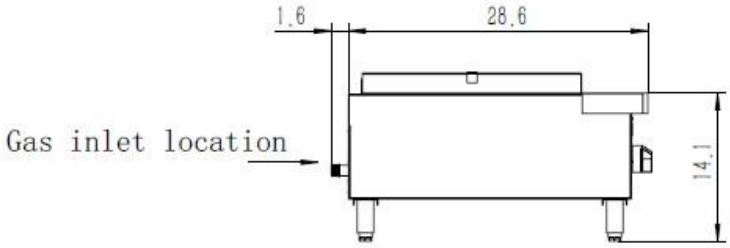

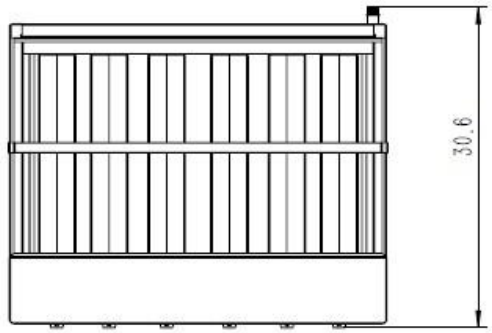

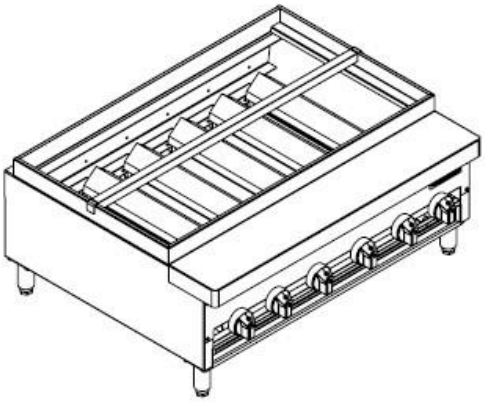

Kabob Series Parts List

1	35-400-DS	body	9	35-350-00	pilot stem & tip
2	35-425-DS	front panel	10	35-300-DS	gas manifold pipe
3	35-450-DS	grease pan	11	00-225-00	pilot valve
5	35-125-00	cast iron radiant	12	00-250-00	manual control valve
6	35-150-00	tubular burner	13	00-500-00-C	chrome knob
7	35-675-00	air shutter	13a	15-251-02	**brushed s/s knob
8	35-200-01	orifice hood *(nat gas)*	14	00-275-01	pressure regulator *(nat gas)*
8a	35-200-02	orifice hood *(LP)*	14a	00-275-02	pressure regulator *(LP)*

** For items ending in DS please specify the model size. (For example, 35-425-72 for a Kabob 72
** item not pictured

TROUBLESHOOTING GUIDE

Condition	Probable Cause	Solution
Small/no burner flame	Regulator failure	Unplug regulator vent hole or replace regulator.
	Plugged orifice hood	Unplug hole or replace
	orifice. Plugged burner port	Unplug burner port(s).
Small/no pilot flame	Pilot valve setting	Adjust flame height.
	Plugged pilot tip	Unplug pilot ports.
Yellow burner flame	Improper air shutter setting	Increase air shutter setting until flame is blue.
	Enlarged orifice hood	Replace w/correct orifice.
Flame lifts off burner	Improper air shutter setting	Decrease air shutter setting until flame sits on burner.
	Plugged orifice hood	Unplug orifice hole or replace
	orifice. Improper level setting	Adjust level w/feet or shims.
Too hot/cold	Improper control setting	Adjust control setting or replace Control.
	Improper level setting	Adjust level w/feet or shims.

CONNERTON LIMITED WARRANTY
Effective January 2020

CONNERTON (Company) warrants to the original owner that the product be free from defects in materials and/or workmanship. This warranty shall apply to units properly installed in a static location only and be in effect for two (2) years from the date of purchase but shall not exceed 30 months from the date of shipment from the Company. *2nd year warranty covers parts only. **. Travel/mileage charges will not apply. The warranty is limited, at the option of the Company to repair or replace any part found to be defective. This warranty covers normal labor charges for products or parts installed within the United States and Canada only. Labor charges shall be covered to the extent that the performance is effected within fifty (50) miles from a Company Authorized Servicer.

The product is intended for commercial purposes only. This warranty is void if the product is used for other than commercial purposes. Replacement parts must be supplied by a Company Authorized Servicer and defective parts returned intact to the same, when requested. Documents verifying ownership and installation dates are required. Broiler grates and radiant are warranted (part only) for 90 days.

THE WARRANTY DOES NOT COVER Misuse, abuse, or improper installation, (such as use in residential application). Damages and/or failures due to alteration/modification by other than an authorized servicer. Damage incurred during transit and/or handling. Damage resulting from the use of other than genuine CONNERTON parts. Damage resulting from the use of or exposure to harsh chemicals or improper cleaning procedures. Damages caused by flood, fire or other acts of nature. The Company shall not be responsible or liable for any incidental or consequential damage and/or injury, claims of loss of use, loss of product or profit.

THE OWNER SHALL BE RESPONSIBLE FOR Proper installation (as detailed in the owner's manual) and in accordance with local codes. All maintenance, adjustments, cleaning, and providing adequate clearances. Making the unit reasonable accessible for service. The use of only authorized servicers for needed repairs.

PROCEEDURES FOR REQUESTING WARRANTY SERVICE All services must be prearranged by the Company prior to works being performed. Contact CONNERTON service department at (714)-547-9218 furnish complete model and serial numbers and a copy of the purchase invoice and describe nature of the problem.
THIS WARRANTY CONSTITUTES THE EXCLUSIVE REMEDY OF THE COMPANY. THIS WARRANTY SET FORTH WITHIN HEREIN IS EXCLUSIVE AND IN LIEU OF ANY/ALL OTHER WARRANTIES EITHER EXPRESSED OR IMPLIED, INCLUDING BUT NOT LIMITED TO WARRANTIES OF MERCHANTABILITY AND/OR FITNESS FOR A PARTICULAR PURPOSE.

Non-Commercial Warranty Restriction

CONNERTON Appliances are only fully warranted for COMMERCIAL USE.
When installed and/or used in other applications, such as but not limited to Residential / Household applications, the warranty covers parts only, for 1 (one) year from the original date of purchase and the following conditions apply.
Owner must furnish a complete model and serial number and proof of purchase less than one year old.
Owner must arrange for a qualified technician to inspect/diagnose make all repairs COMPANY DOES NOT COVER ANY CHARGES RELATED TO… labor, travel, mileage, or freight charges. Only the replacement parts and standard delivery charges are covered.
When the above information is available, Owner or technician, please contact CONNERTON at (562) -464-9901 or
Orders@connertoncooking.com
***** (excluding special order items)…most*** parts can ship within 24 hours.