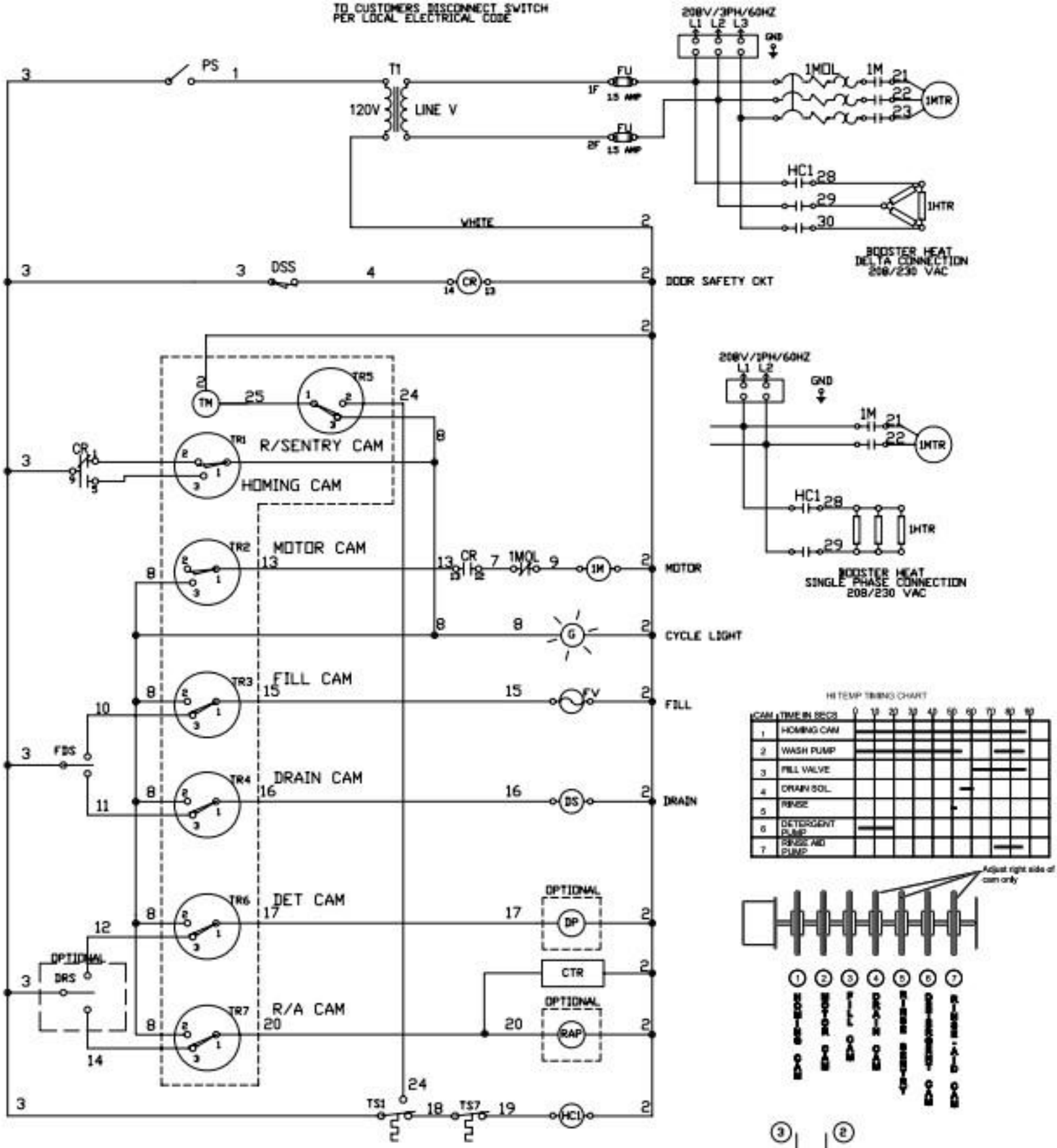

DIAGRAM STATE
END OF CYCLE
POWER-OFF
DOOR-CLOSED

1HTR	BOOSTER HEATER
1M	PUMP MOTOR CONTACTOR
1MOL	PUMP MOYOR OVERLOAD
1MTR	PUMP MOTOR
CR	CONTROL RELAY
CTR	CYCLE COUNTER

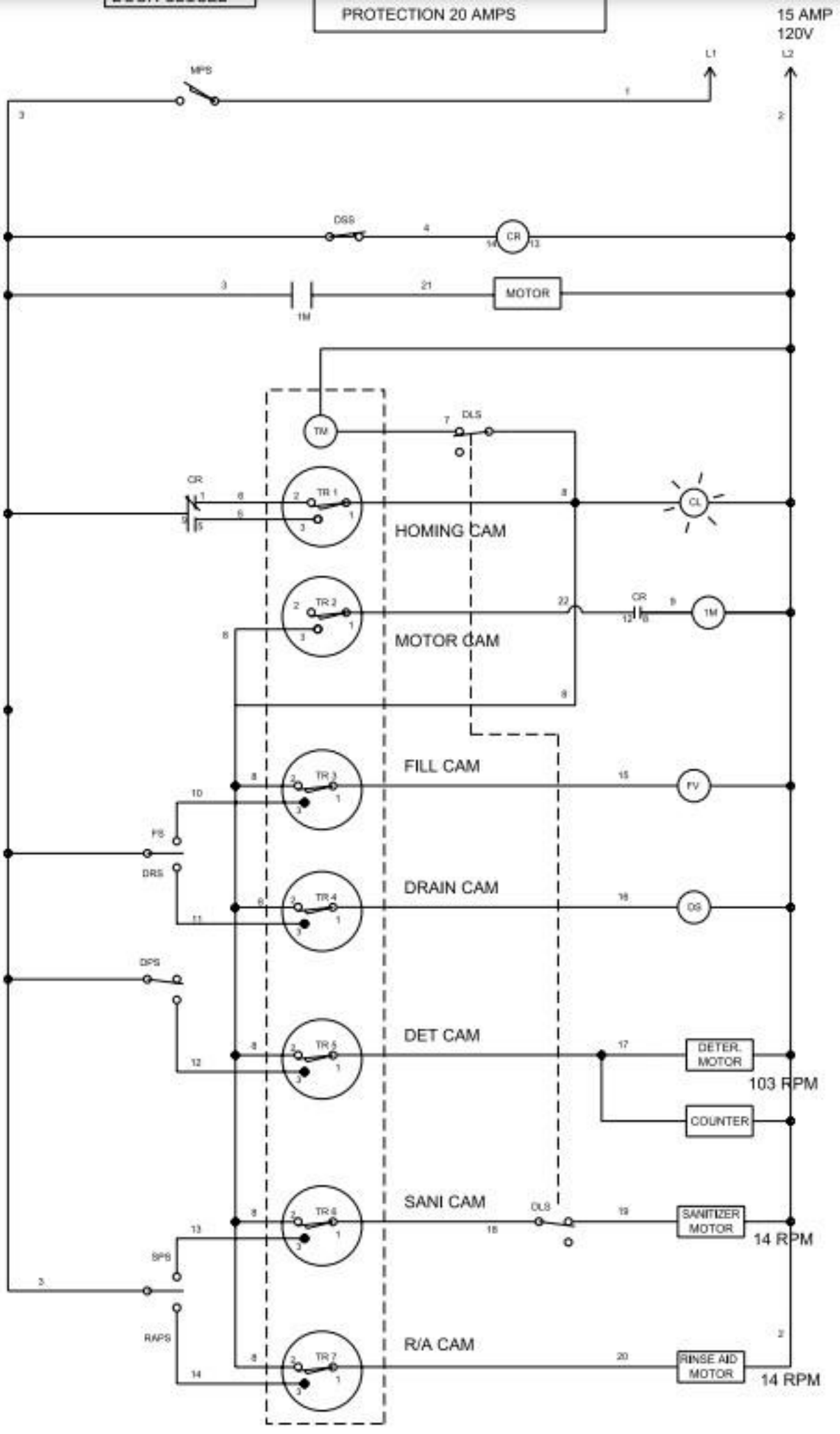
PROTECTION 20 AMPS
15 AMP
120V
L1
L2
MPS
DSS
CR
MOTOR
1M
TM
DLS
TR 1
HOMING CAM
CL
TR 2
MOTOR CAM
FILL CAM
FV
FS
DRS
DRAIN CAM
DS
DPS
DET CAM
DETER. MOTOR
103 RPM
COUNTER
SANI CAM
SANITIZER MOTOR
14 RPM
SPS
RAPS
R/A CAM
RINSE AID MOTOR
14 RPM