CHICAGO FAUCETS®
a Geberit company
2100 South Clearwater Drive
Des Plaines, IL 60018
Phone: 847-803-5000
Fax: 847-803-5454
www.chicagofaucets.com

FOR TECHNICAL ASSISTANCE
1-800-TEC-TRUE (1-800-832-8783)

REPAIR PARTS

BY: SID	DATE: 05-17-22
CHK:	REV:

FITTING NO.
897-244XKCABRCF
SUBMITTED MODEL NO.

ITEM NO.

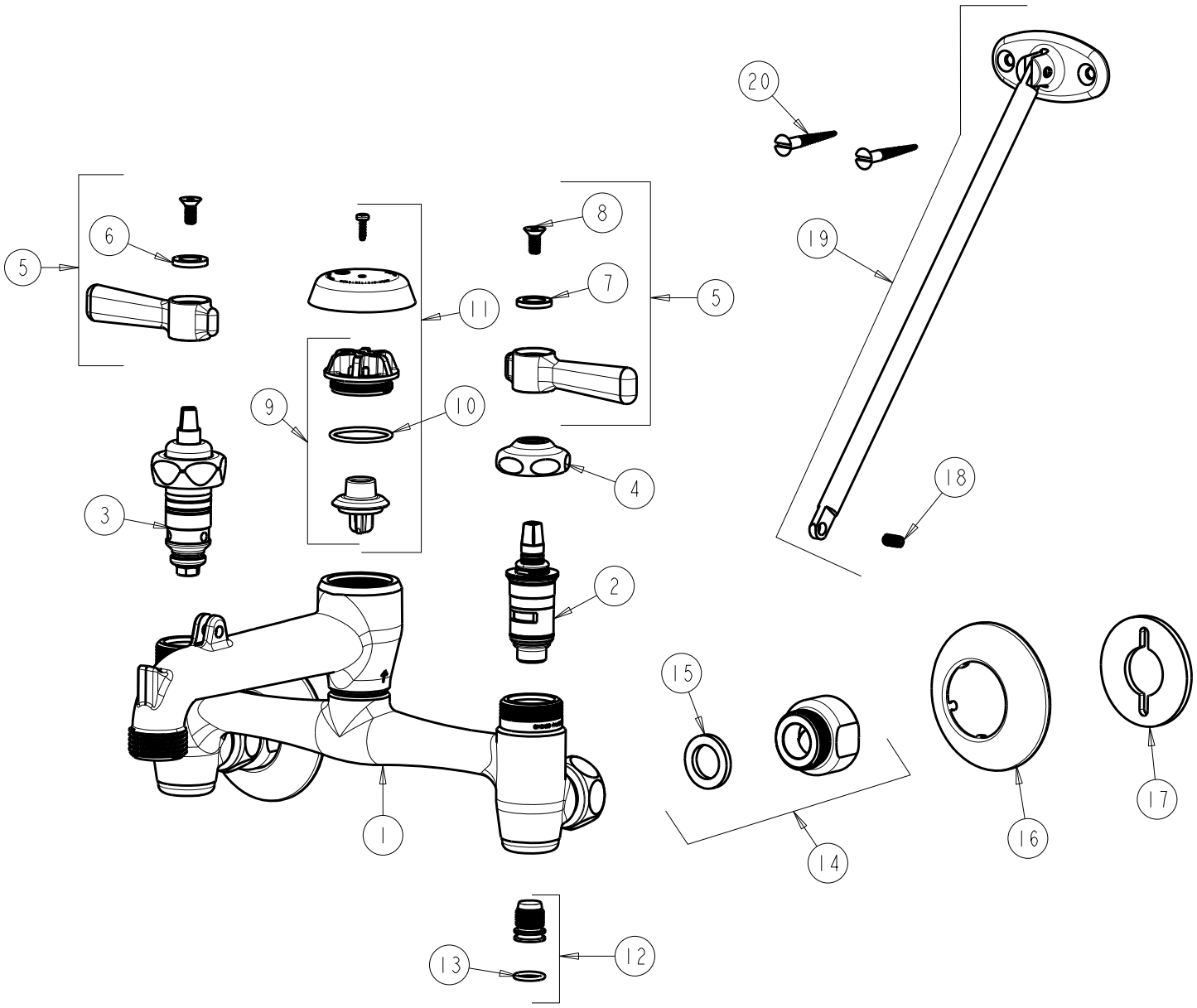

ITEM	PART NO.	DESCRIPTION	ITEM	PART NO.	DESCRIPTION
1	------	NOT SOLD SEPARATELY	11	892-402KJKABNF	KIT, VACUUM BREAKER ASSEMBLY
2	1-099XKCJKABNF	CARTRIDGES WITH CHECK VALVE, RH	12	897-014KJKABRBF	INTEGRAL STOP STEM ASSEMBLY
3	826-XJKABNF	KLO-SELF CARTRIDGE	13	1104-007JKABNF	O RING
4	1-214JKCP	CAP	14	897-012JKRCF	ARM ASSEMBLY (INCLUDES WASHER)
5	369-PRJKCP	HANDLE, 2-3/8" LEVER (PAIR)	15	1-011JKABNF	WASHER, .97 X .62 X .12
6	633-023JKNF	INDEX BUTTON (RED)	16	633-201JKCP	WALL FLANGE
7	633-123JKNF	INDEX BUTTON (BLUE)	17	807-112JKNF	WASHER
8	420-020JKNF	SCREW, 1/8 FLAT HEX HEAD X 1/2	18	665-116JKNF	SET SCREW
9	892-302KJKABNF	VACUUM BREAKER REPAIR KIT	19	897-013KJKCP	BRACE ROD ASSEMBLY, 10" LONG
10	80-007JKABNF	O RING 0.989 X .070	20	173-006JKCP	FLAT HEAD WOOD SCREW