Repair Parts

EQ-A11C-11ABCP

Touch-free faucet with plug-and-play installation

EQ-11KJKABNF EQ Control Box, Battery, Single-Supply

Base Parts:

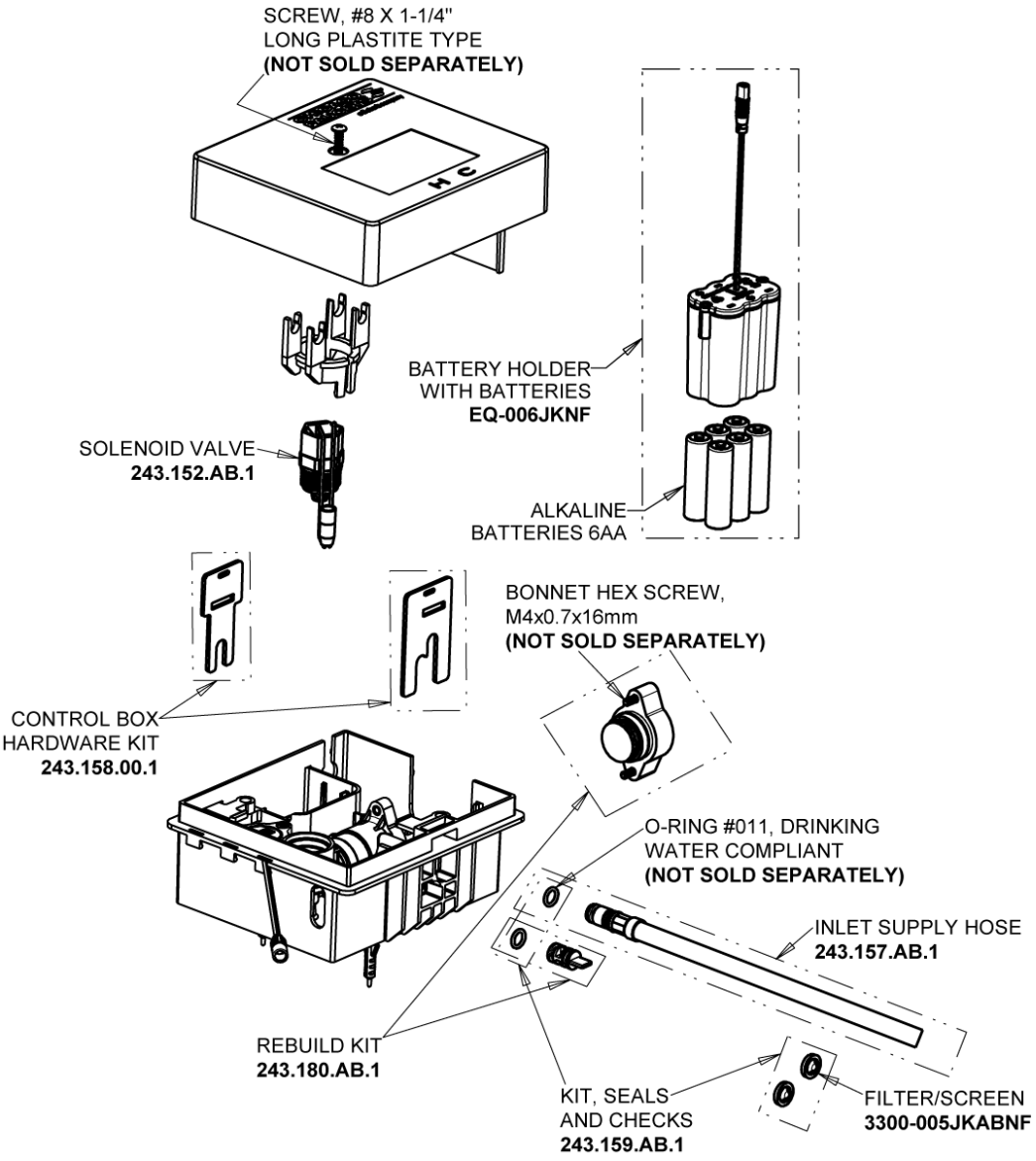

Polished Chrome EQ Curved Spout, 0.35 GPM

EQ-A11C-KJKABCP

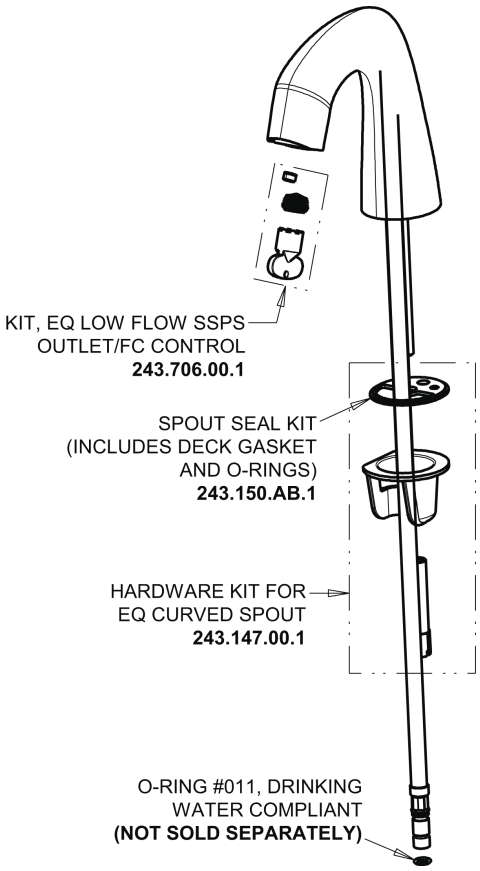

For Technical Assistance:

Phone: 800-TEC-TRUE (832-8783)

Email: techsupport.us@chicagofaucets.com

2100 South Clearwater Drive
Des Plaines, IL 60018
Phone: 847-803-5000
chicagofaucets.com