Repair Parts

405-HE37VP369AB

Concealed Hot and Cold Water Sink Faucet

CHICAGO FAUCETS
Geberit Group

Base Parts:

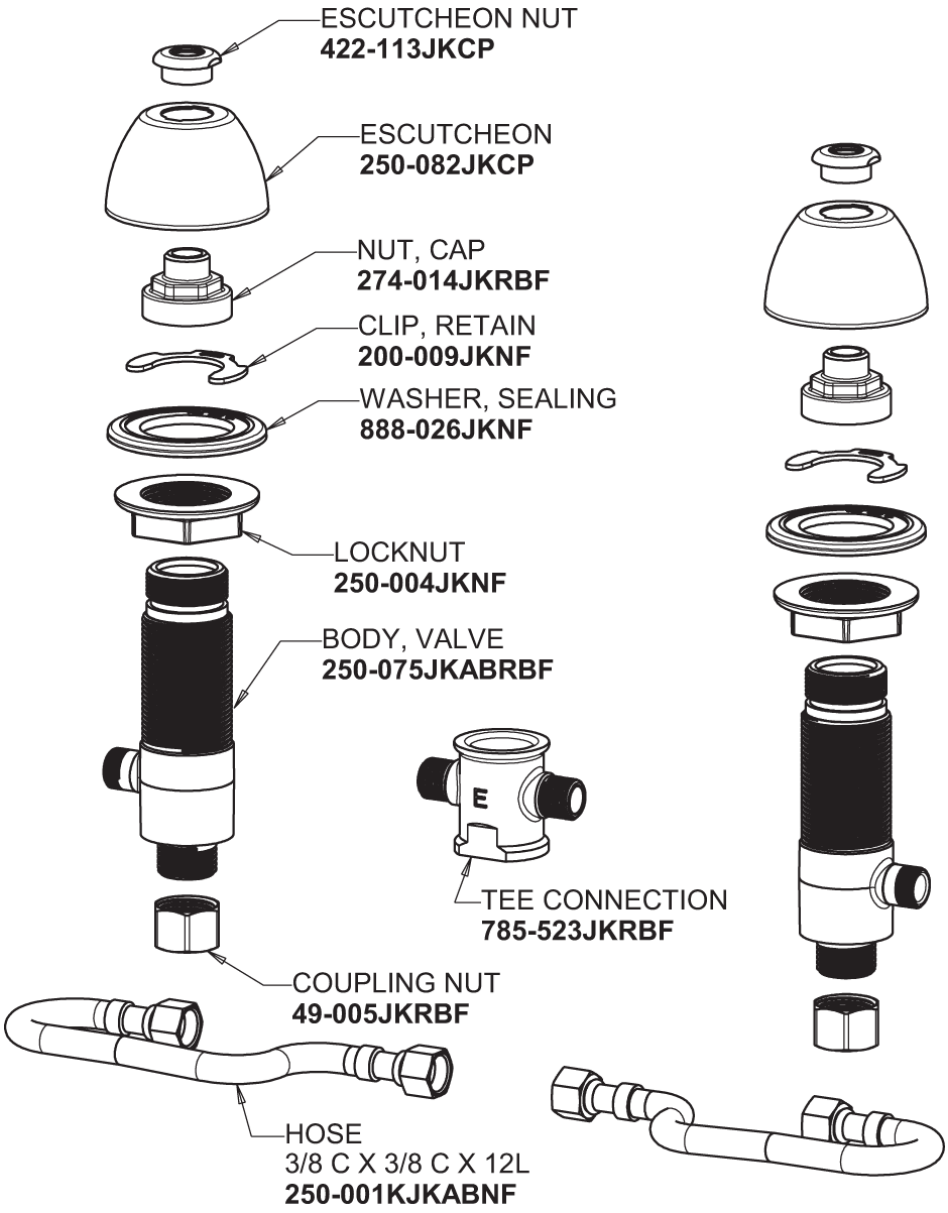

405 Series Spout
401-602KJKCP

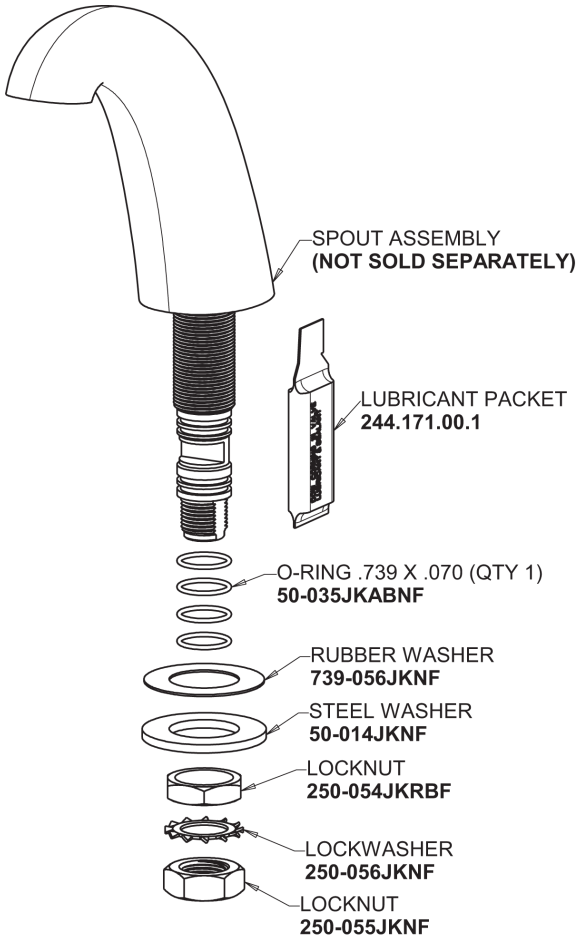

For Technical Assistance:

Phone: 800-TEC-TRUE (832-8783)

Email: techsupport.us@chicagofaucets.com

2100 South Clearwater Drive
Des Plaines, IL 60018
Phone: 847-803-5000
chicagofaucets.com

Repair Parts

405-HE37VP369AB

Concealed Hot and Cold Water Sink Faucet

2-3/8" Lever Handle
369-PRJKCP

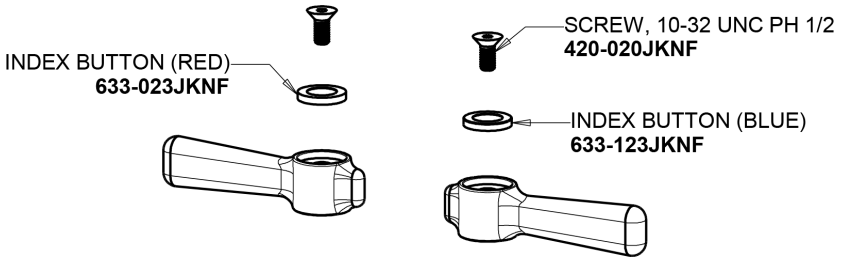

1.5 GPM (5.7 L/min) Vandal Proof Non-Aerating Laminar Outlet
E37VPJKABCP

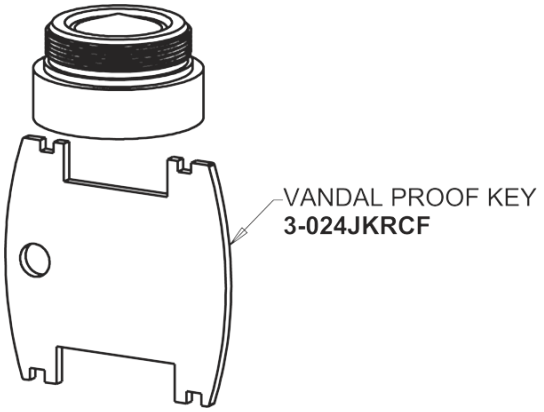

Quaturn Compression Cartridge (pair)
377-XTRHJKABNF (right)
377-XTLHJKABNF (left)

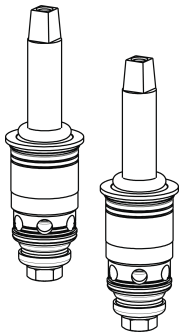

For Technical Assistance:

Phone: 800-TEC-TRUE (832-8783)
Email: techsupport.us@chicagofaucets.com

2100 South Clearwater Drive
Des Plaines, IL 60018
Phone: 847-803-5000
chicagofaucets.com