Repair Parts

116.953.AB.1

Touch-free, programmable faucet with above-deck electronics

Base Parts:

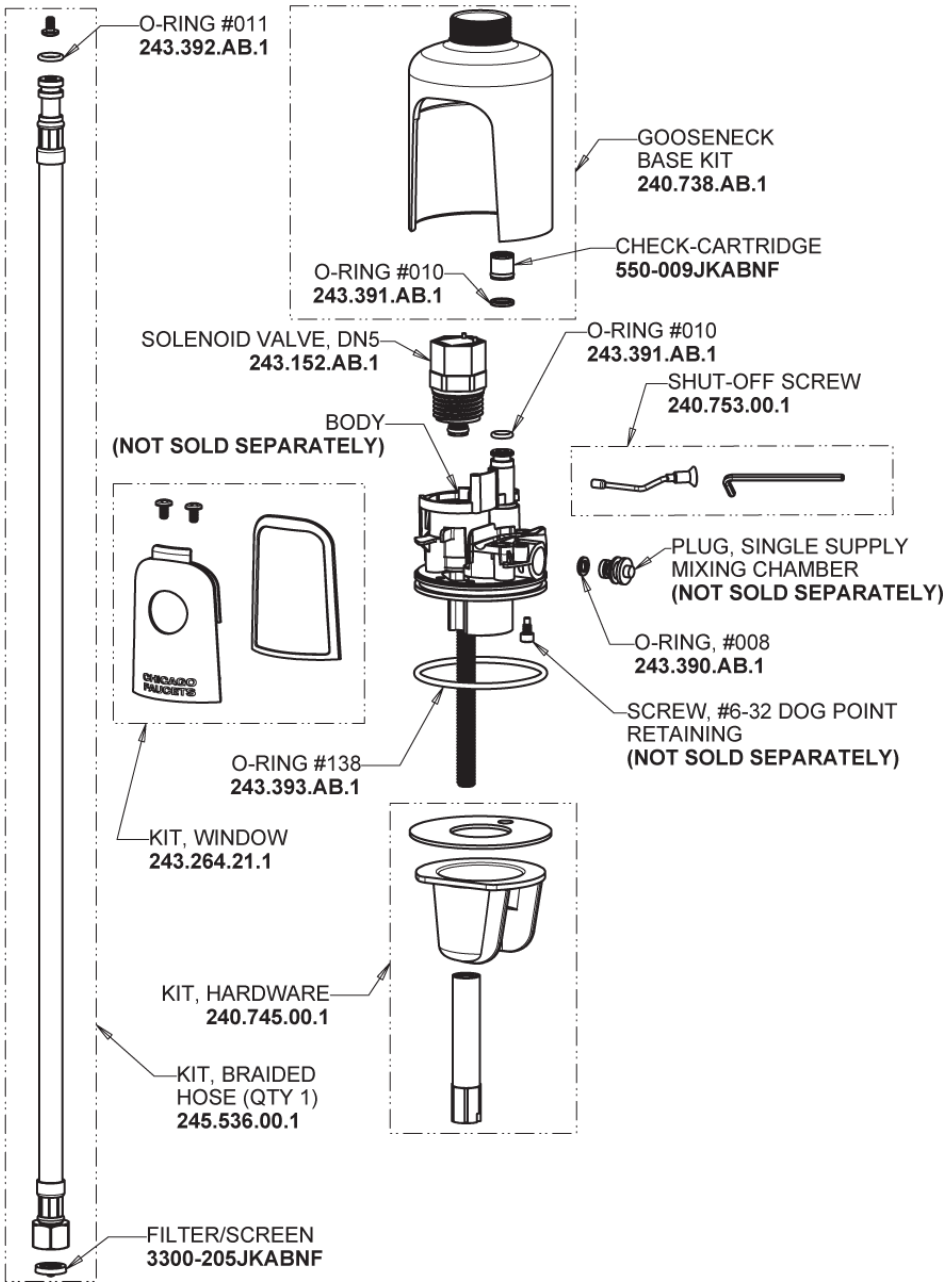

Hose, 1/2" IPS x 3/8" COM x 24" L
243.705.AB.1

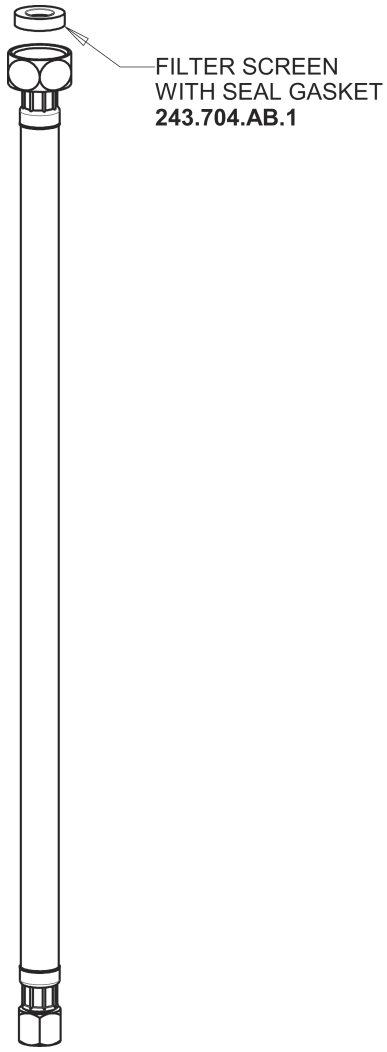

For Technical Assistance:

Phone: 800-TEC-TRUE (832-8783)
Email: techsupport.us@chicagofaucets.com

2100 South Clearwater Drive
Des Plaines, IL 60018
Phone: 847-803-5000
chicagofaucets.com

Repair Parts

116.953.AB.1

Touch-free, programmable faucet with above-deck electronics

CHICAGO FAUCETS
Geberit Group

5-1/4" Rigid / Swing Gooseneck Spout
GN2AH8JKABCP

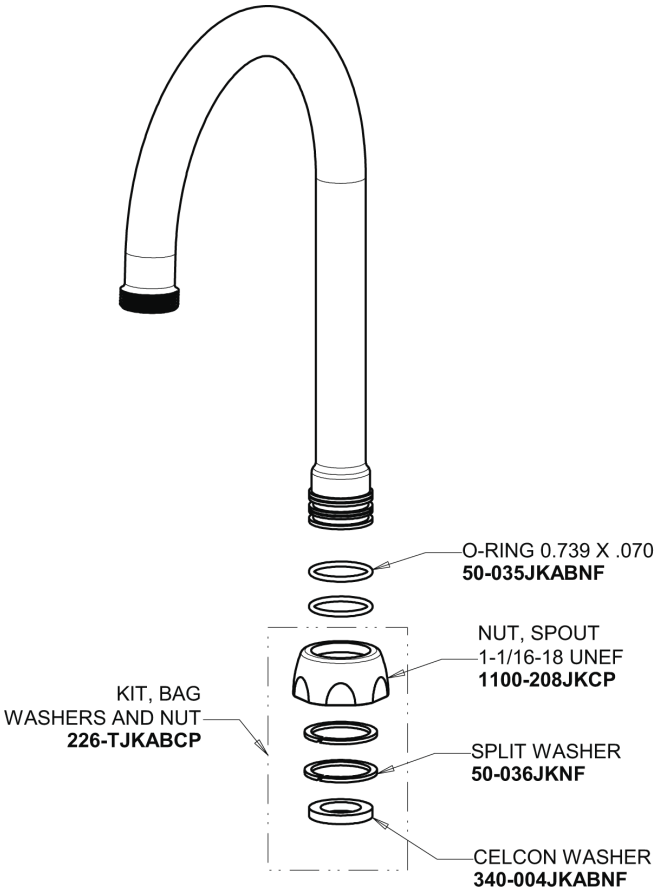

Self Sustaining Power System
SSPS

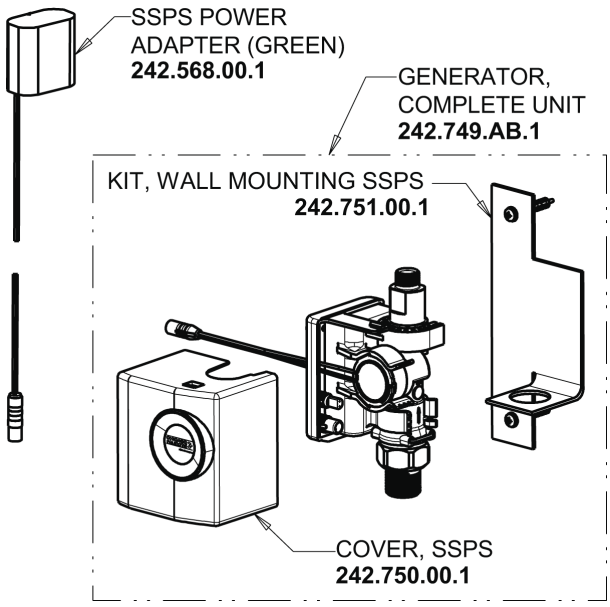

0.5 GPM (1.9 L/min) Vandal Proof Non-Aerating Spray Outlet
E2805-5JKABCP

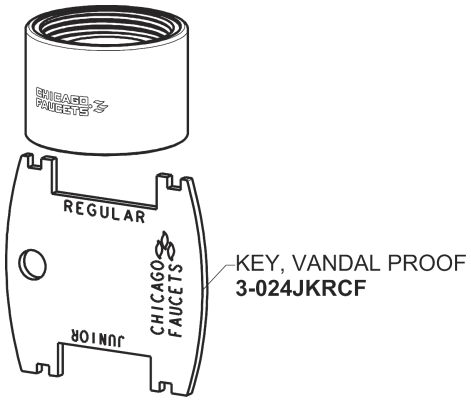

Electronic Module
242.574.00.1

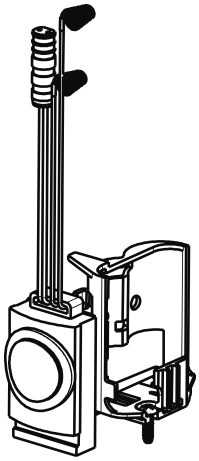

For Technical Assistance:

Phone: 800-TEC-TRUE (832-8783)
Email: techsupport.us@chicagofaucets.com

2100 South Clearwater Drive
Des Plaines, IL 60018
Phone: 847-803-5000
chicagofaucets.com