Repair Parts

116.815.AB.1

Touch-free, programmable faucet with mixing valve and supply stops, for Patient Care applications

CHICAGO FAUCETS
Geberit Group

Base Parts:

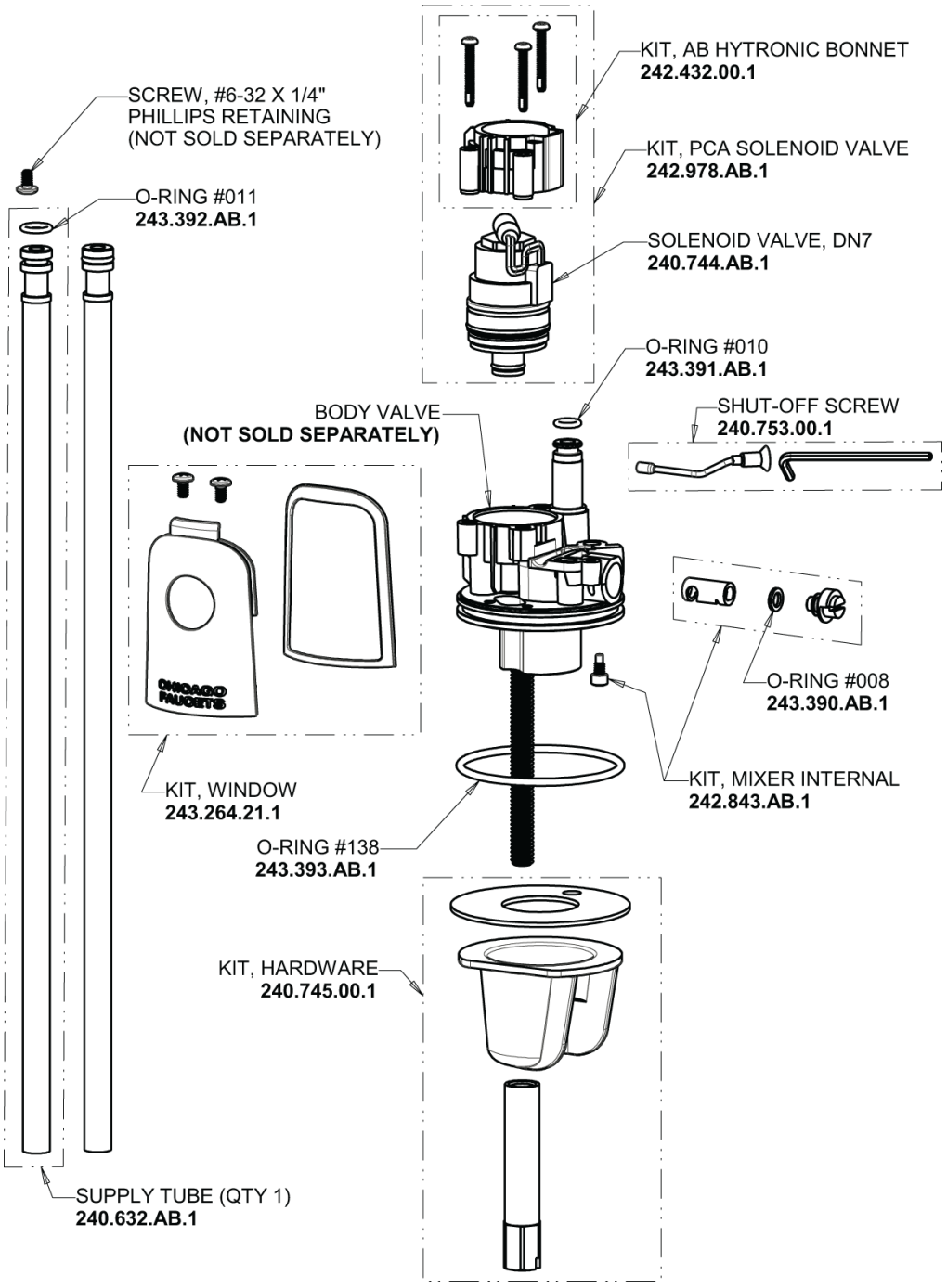

HyTronic Traditional Spout
244.507.00.1

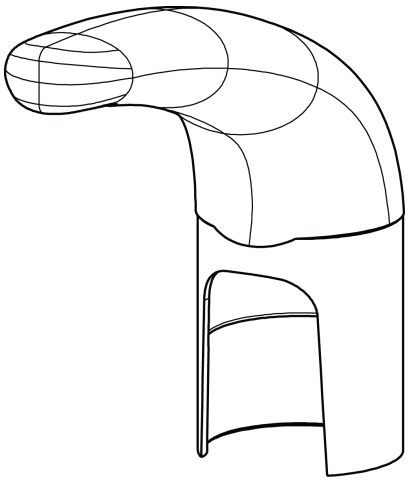

2.2 GPM (8.3 L/min) Vandal Proof Softflo Aerator
E12VPJKABCP

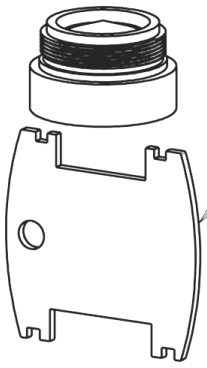

For Technical Assistance:

Phone: 800-TEC-TRUE (832-8783)
Email: techsupport.us@chicagofaucets.com

2100 South Clearwater Drive
Des Plaines, IL 60018
Phone: 847-803-5000
chicagofaucets.com

Repair Parts

116.815.AB.1

Touch-free, programmable faucet with mixing valve and supply stops, for Patient Care applications

CHICAGO FAUCETS
Geberit Group

Supply stop with Integral Check Valve
1013-CSTABCP

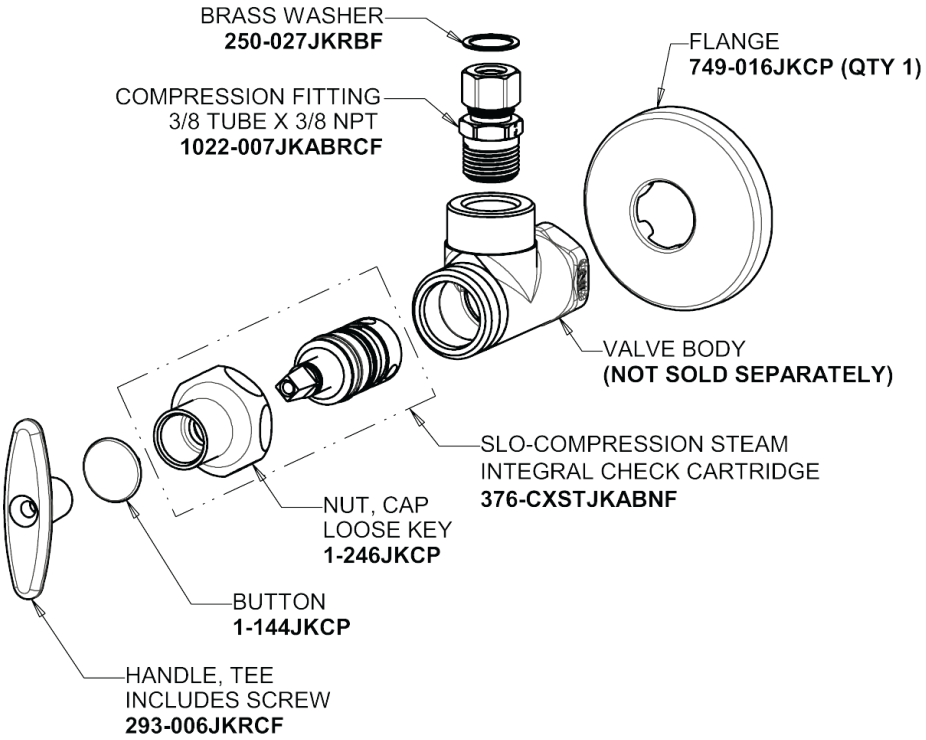

Long Life Battery Kit
243.868.00.1

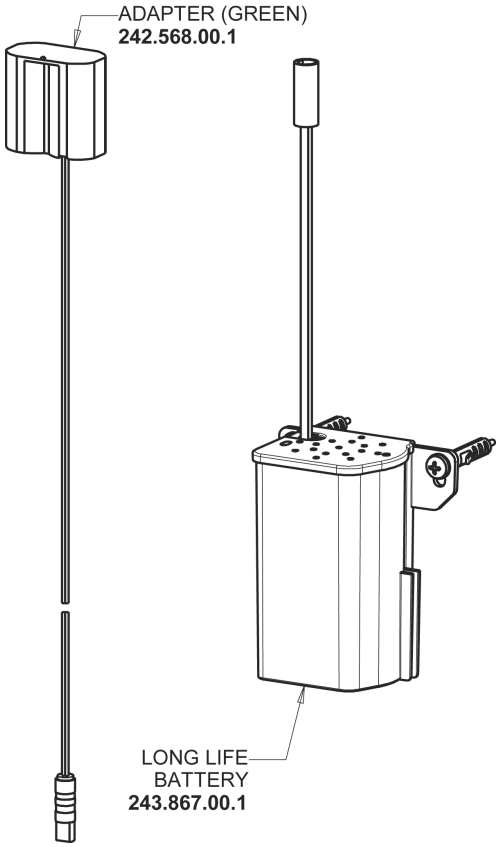

Electronic Module
242.433.00.1

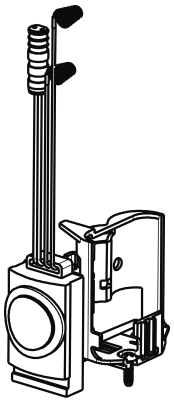

For Technical Assistance:

Phone: 800-TEC-TRUE (832-8783)
Email: techsupport.us@chicagofaucets.com

2100 South Clearwater Drive
Des Plaines, IL 60018
Phone: 847-803-5000
chicagofaucets.com

Repair Parts

116.815.AB.1

Touch-free, programmable faucet with mixing valve and supply stops, for Patient Care applications

CHICAGO FAUCETS
Geberit Group

Thermostatic Mixing Valve
131-LCFMJKABRCF

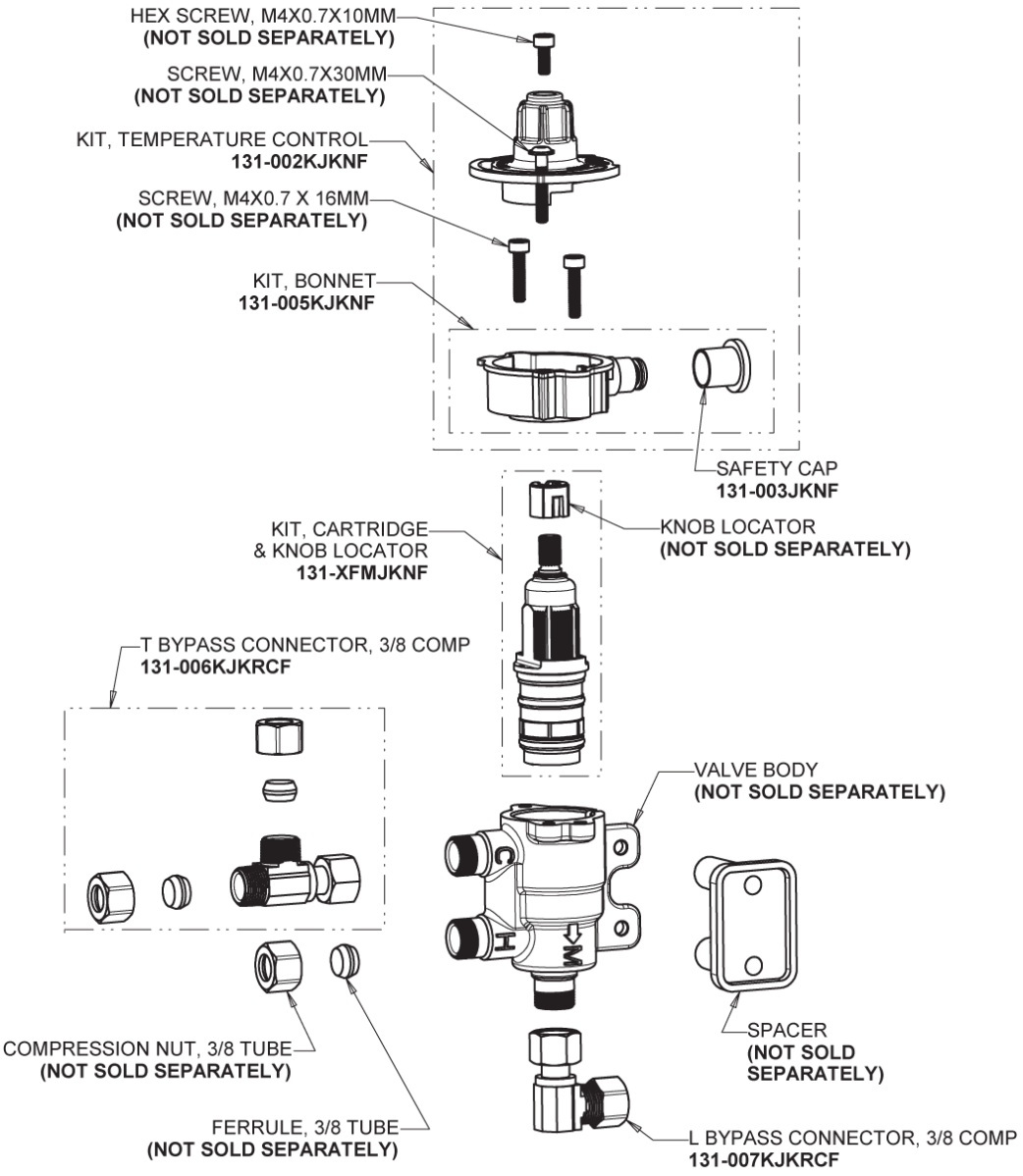

For Technical Assistance:

Phone: 800-TEC-TRUE (832-8783)
Email: techsupport.us@chicagofaucets.com

2100 South Clearwater Drive
Des Plaines, IL 60018
Phone: 847-803-5000
chicagofaucets.com