Repair Parts

116.681.AB.1

HyTronic Gooseneck Sink Faucet with Dual Beam Infrared Sensor and EBPS

Base Parts:

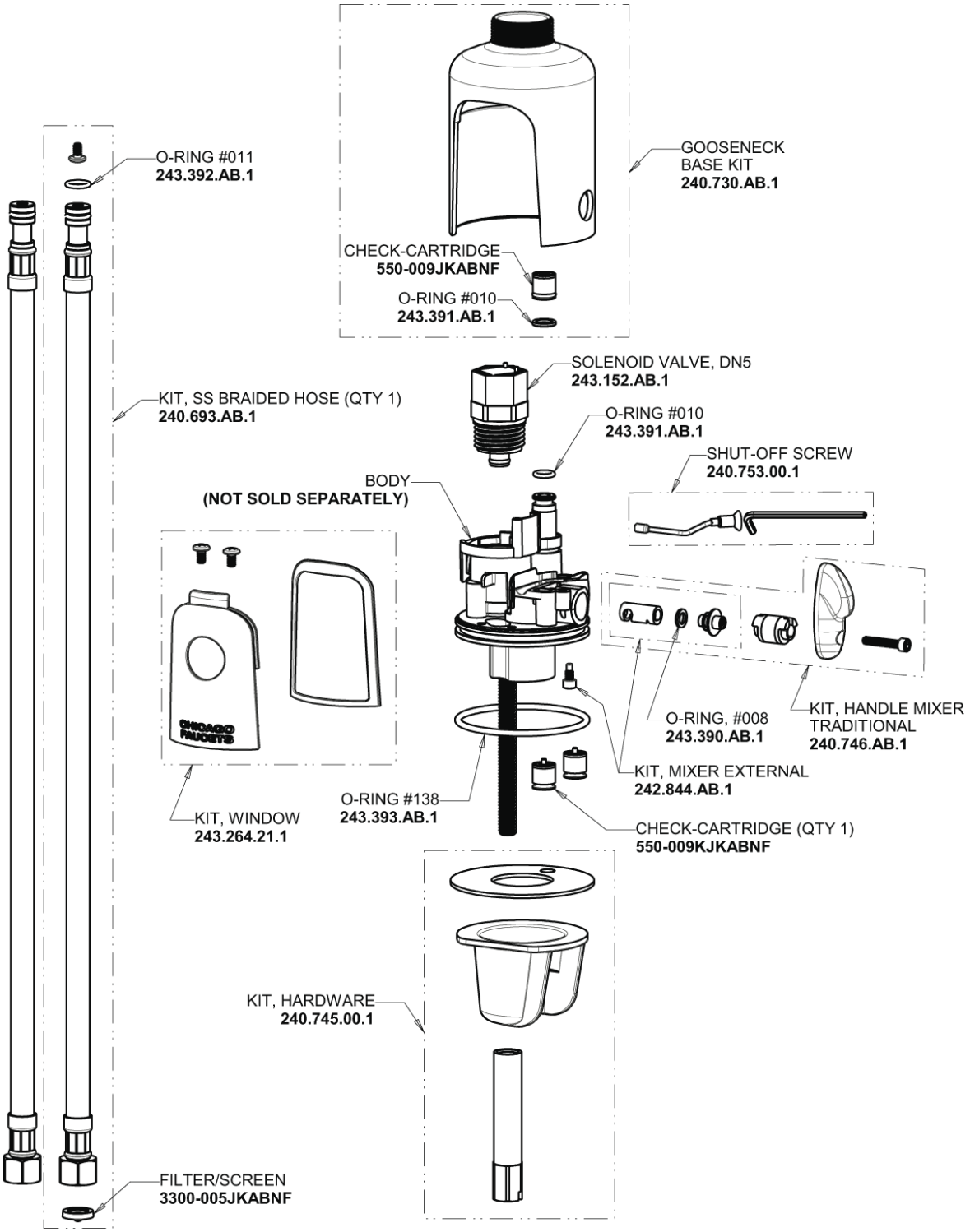

For Technical Assistance:

Phone: 800-TEC-TRUE (832-8783)

Email: techsupport.us@chicagofaucets.com

2100 South Clearwater Drive

Des Plaines, IL 60018

Phone: 847-803-5000

chicagofaucets.com

Repair Parts

116.681.AB.1

HyTronic Gooseneck Sink Faucet with Dual Beam Infrared Sensor and EBPS

CHICAGO FAUCETS
Geberit Group

5-1/4" Rigid / Swing Gooseneck Spout
GN2AH8JKABCP

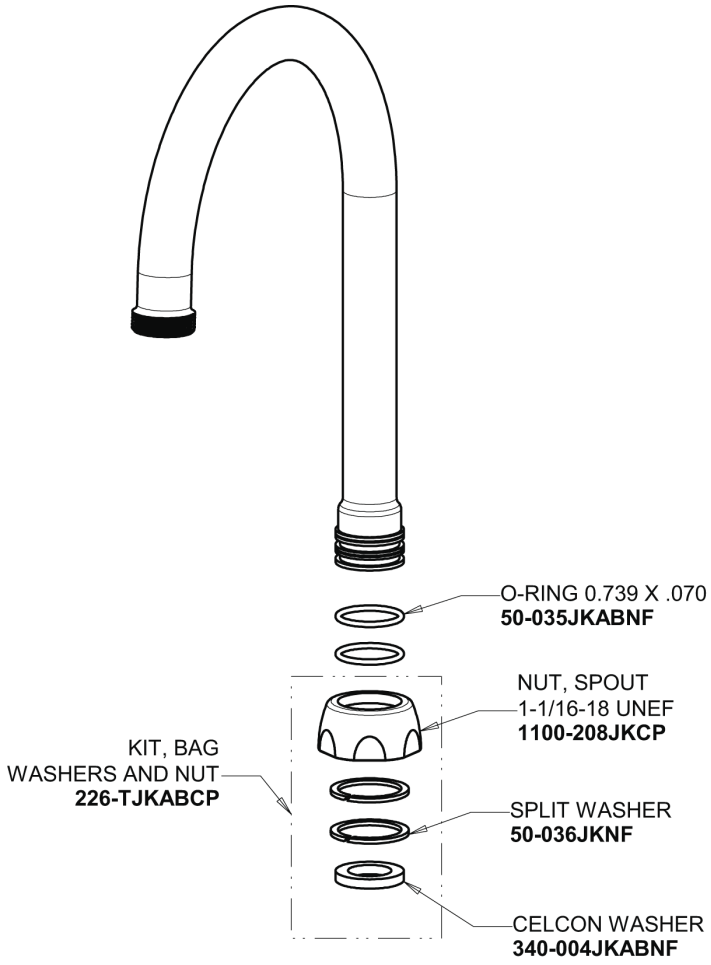

Emergency Backup Power System
243.290.00.1

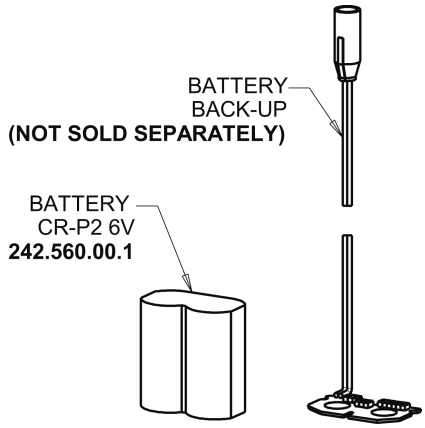

Electronic Module
242.433.00.1

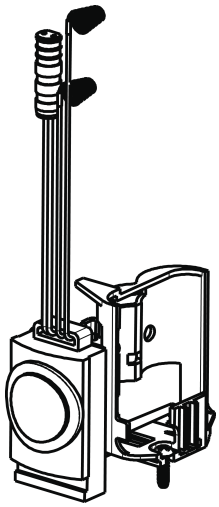

0.35 GPM (1.3 L/min) Vandal Proof Econo-Flo Non-Aerating Outlet
E38VPJKABCP

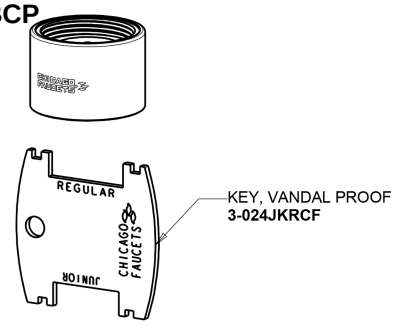

Bank Installation Adapter Wire
242.340.00.1

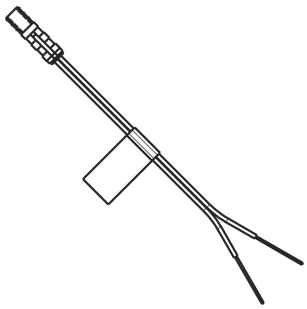

For Technical Assistance:

Phone: 800-TEC-TRUE (832-8783)
Email: techsupport.us@chicagofaucets.com

2100 South Clearwater Drive
Des Plaines, IL 60018
Phone: 847-803-5000
chicagofaucets.com