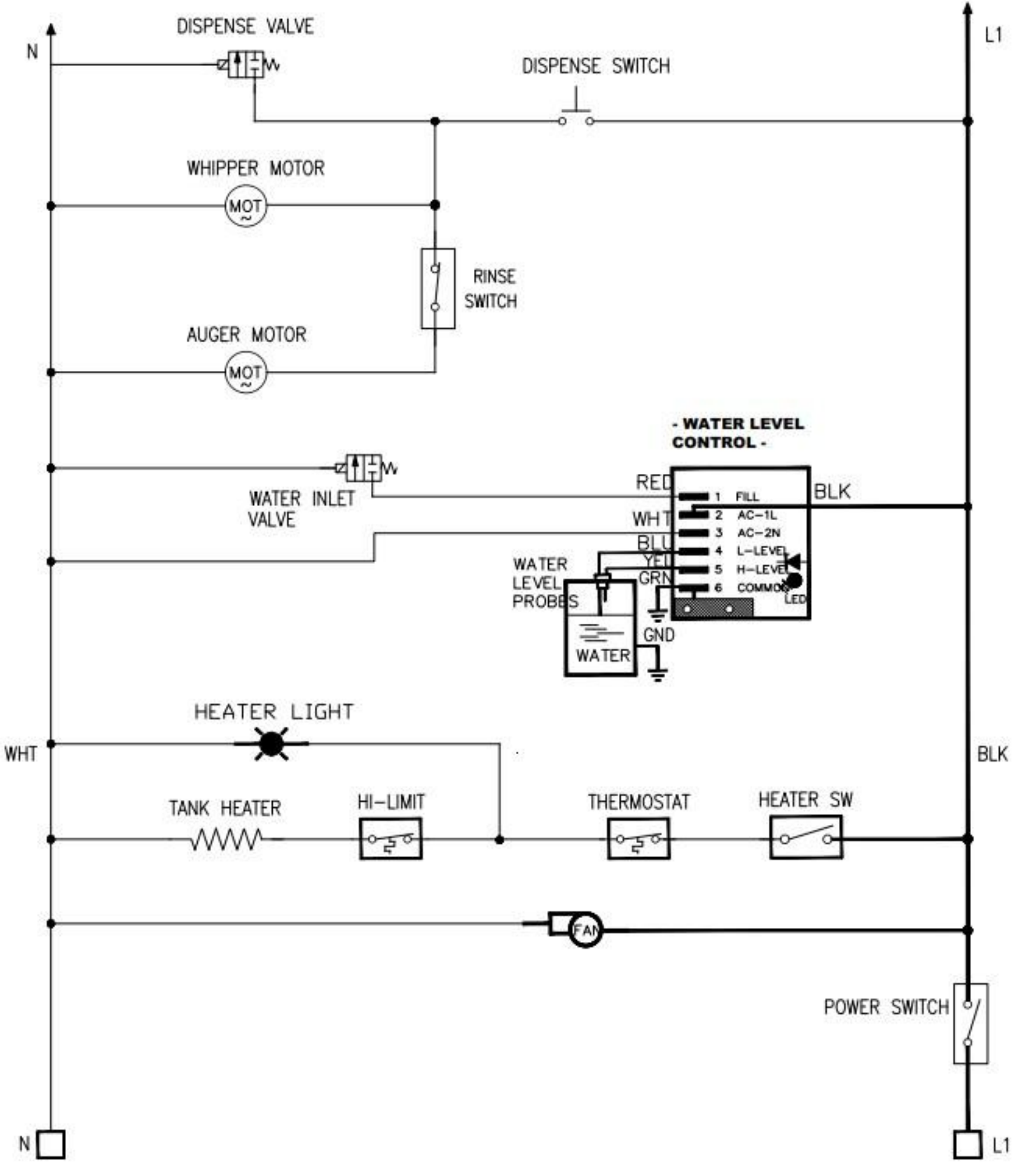
DISPENSE VALVE
N
L1
DISPENSE SWITCH
WHIPPER MOTOR
MOT
RINSE SWITCH
AUGER MOTOR
MOT
- WATER LEVEL CONTROL -
WATER INLET VALVE
RED
BLK
WHT
BLU
YEL
GRN
1 FILL
2 AC-1L
3 AC-2N
4 L-LEVEL
5 H-LEVEL
6 COMMON
LED
WATER LEVEL PROBES
WATER
GND
HEATER LIGHT
WHT
BLK
TANK HEATER
HI-LIMIT
THERMOSTAT
HEATER SW
FAN
POWER SWITCH
N
L1

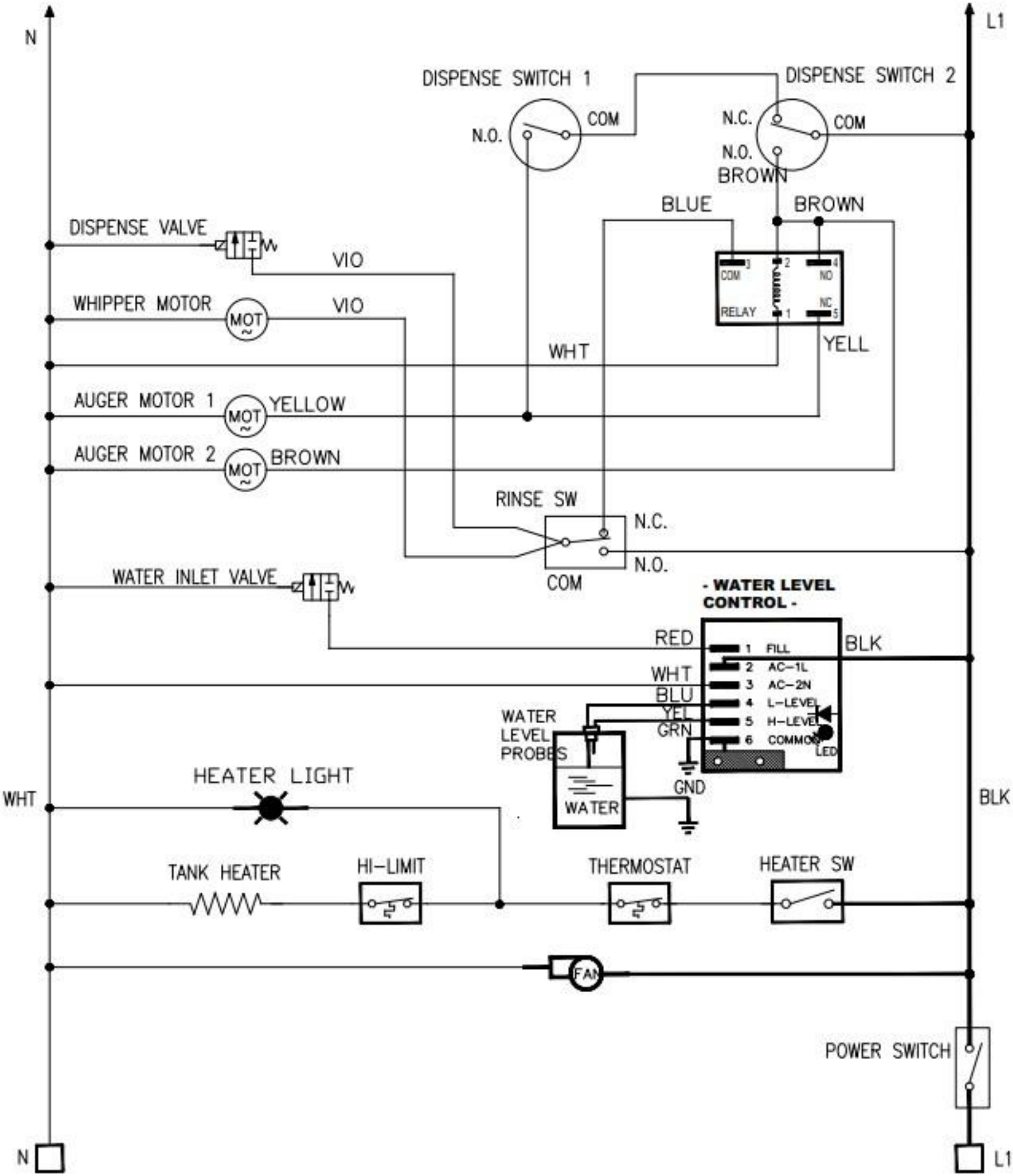
N
L1
DISPENSE SWITCH 1
N.O.
COM
DISPENSE SWITCH 2
N.C.
COM
N.O.
BROWN
BLUE
BROWN
DISPENSE VALVE
VIO
COM
NO
RELAY
NC
WHIPPER MOTOR
MOT
VIO
WHT
YELL
AUGER MOTOR 1
MOT
YELLOW
AUGER MOTOR 2
MOT
BROWN
RINSE SW
N.C.
N.O.
COM
WATER INLET VALVE
- WATER LEVEL CONTROL -
RED
BLK
1 FILL
2 AC-1L
3 AC-2N
4 L-LEVEL
5 H-LEVEL
6 COMMON
LED
WHT
BLU
YEL
GRN
WATER LEVEL PROBES
WATER
GND
HEATER LIGHT
WHT
BLK
TANK HEATER
HI-LIMIT
THERMOSTAT
HEATER SW
FAN
POWER SWITCH
N
L1

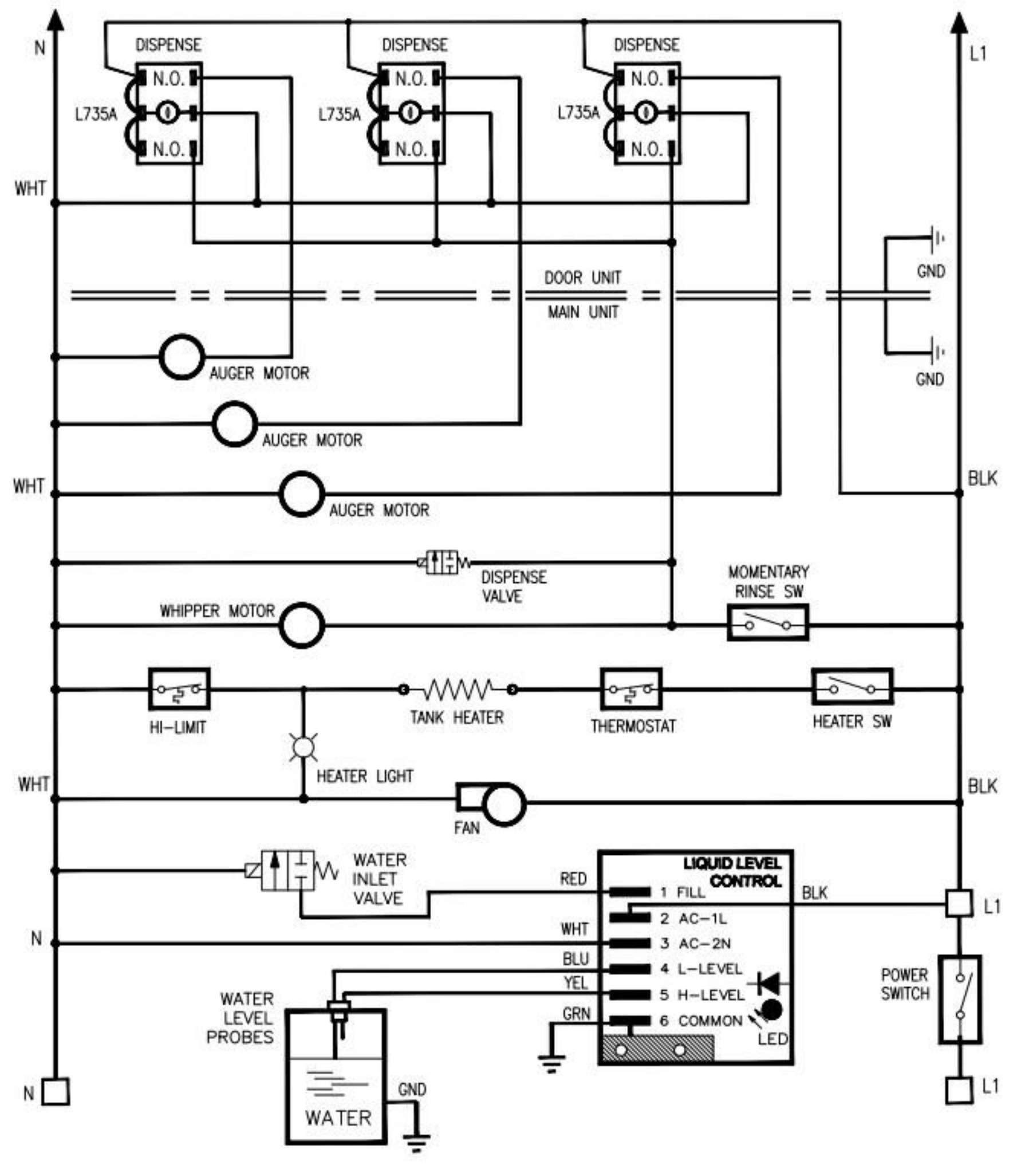
N
L1
DISPENSE
N.O.
L735A
N.O.
DISPENSE
N.O.
L735A
N.O.
DISPENSE
N.O.
L735A
N.O.
WHT
GND
DOOR UNIT
MAIN UNIT
GND
AUGER MOTOR
AUGER MOTOR
WHT
AUGER MOTOR
BLK
DISPENSE VALVE
MOMENTARY RINSE SW
WHIPPER MOTOR
HI-LIMIT
TANK HEATER
THERMOSTAT
HEATER SW
HEATER LIGHT
WHT
BLK
FAN
WATER INLET VALVE
LIQUID LEVEL CONTROL
RED
1 FILL
BLK
L1
2 AC-1L
N
WHT
3 AC-2N
BLU
4 L-LEVEL
YEL
5 H-LEVEL
GRN
6 COMMON
LED
POWER SWITCH
WATER LEVEL PROBES
WATER
GND
N
L1