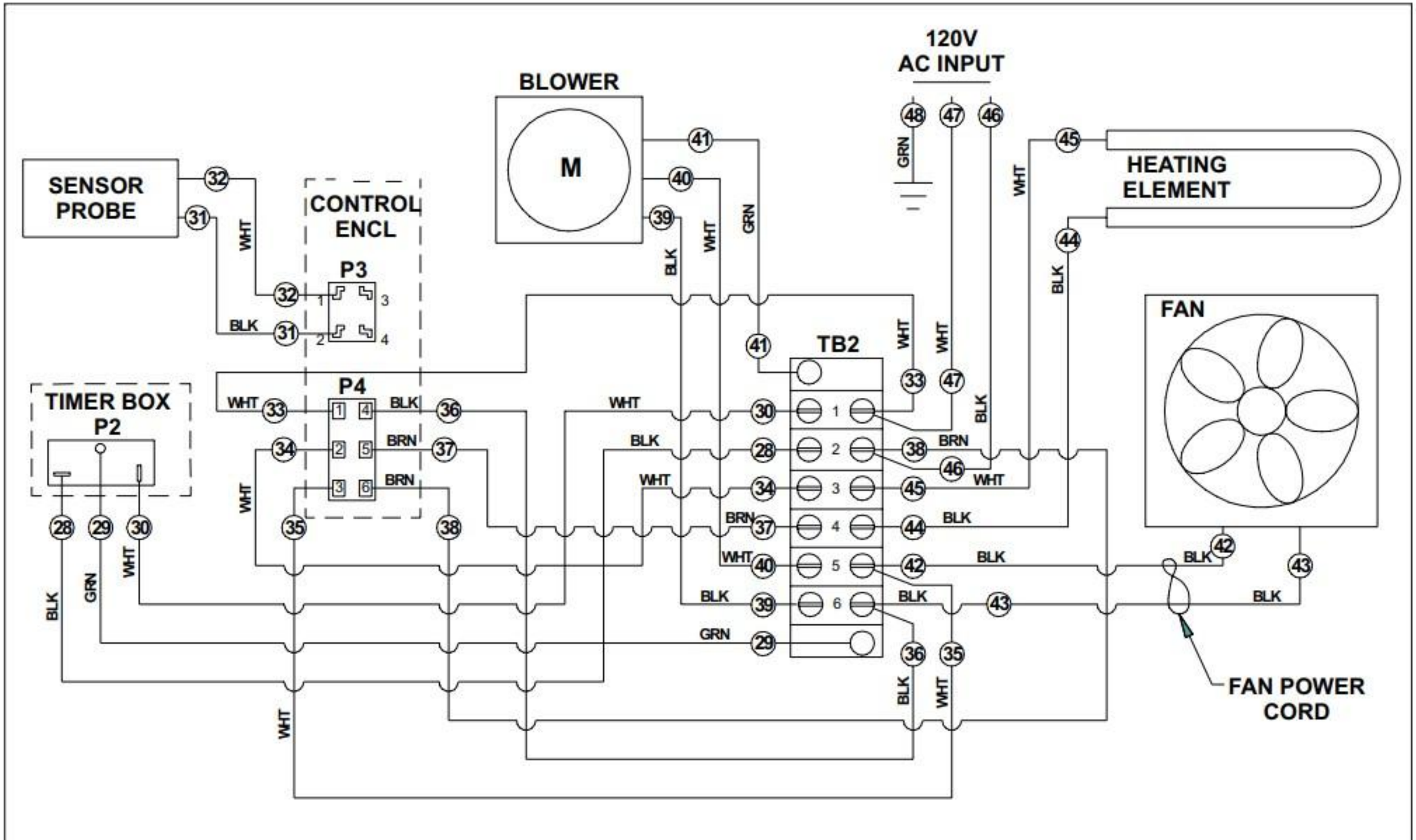
120V
AC INPUT
BLOWER
M
SENSOR
PROBE
CONTROL
ENCL
P3
P4
TIMER BOX
P2
TB2
HEATING
ELEMENT
FAN
FAN POWER
CORD
WHT
BLK
GRN
BRN

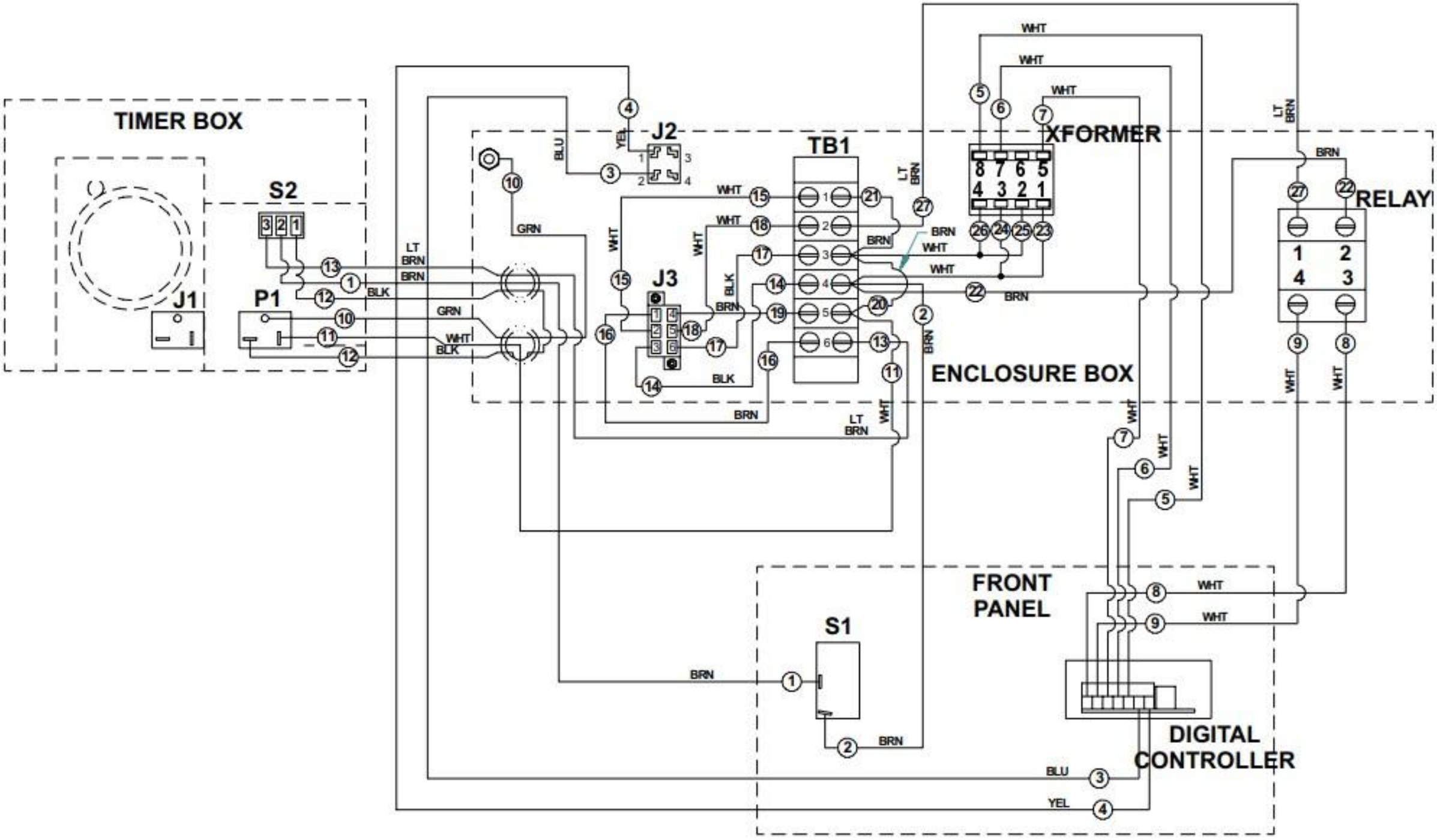
TIMER BOX
S2
J1
P1
J2
J3
TB1
XFORMER
RELAY
ENCLOSURE BOX
FRONT PANEL
S1
DIGITAL CONTROLLER
WHT
LT BRN
BRN
BLK
GRN
BLU
YEL

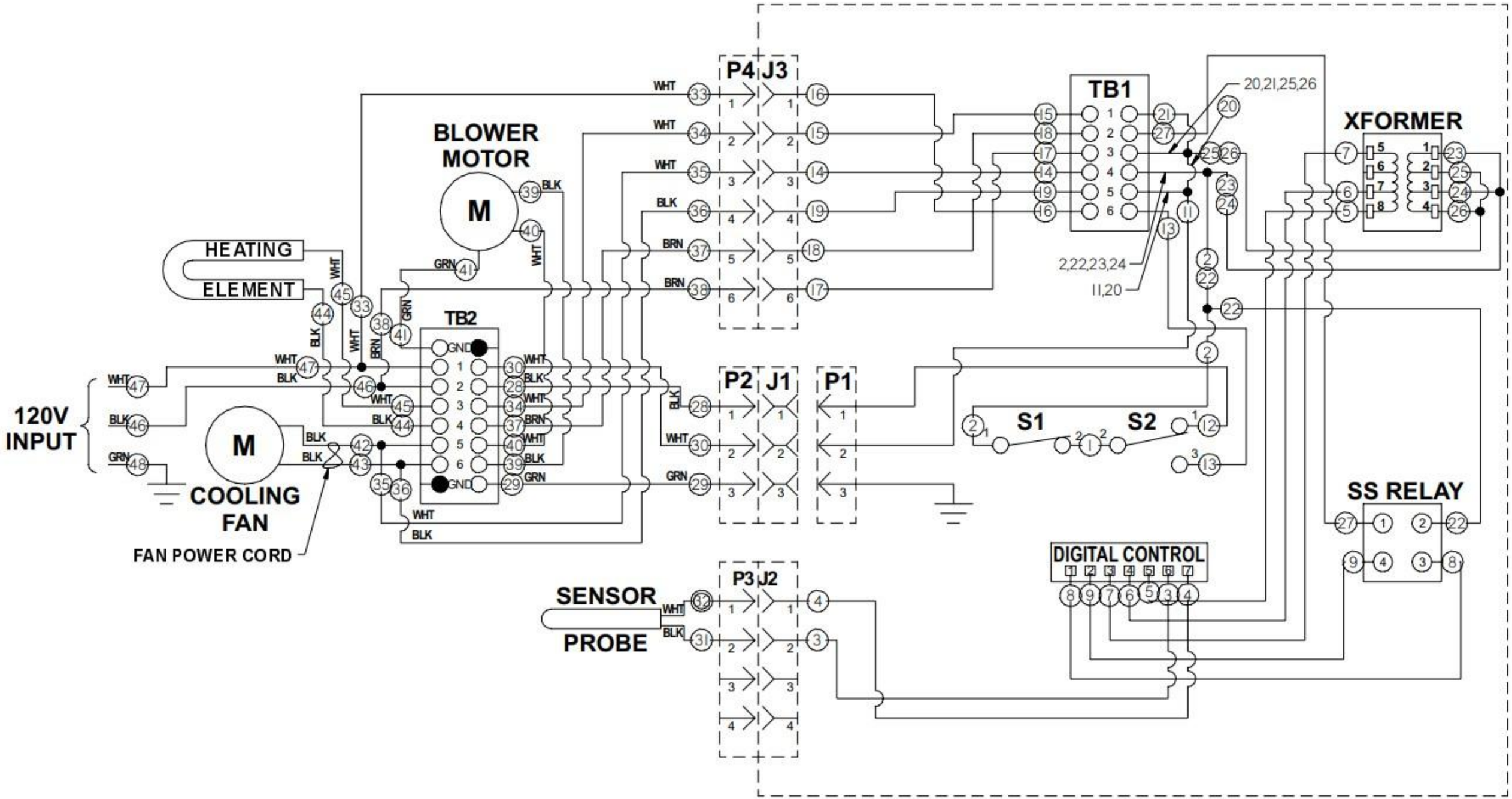
BLOWER MOTOR
M
HEATING ELEMENT
120V INPUT
M
COOLING FAN
FAN POWER CORD
TB2
GND
P4 J3
TB1
20,21,25,26
2,22,23,24
11,20
XFORMER
P2 J1
P1
S1
S2
SS RELAY
DIGITAL CONTROL
SENSOR PROBE
P3 J2
WHT
BLK
BRN
GRN