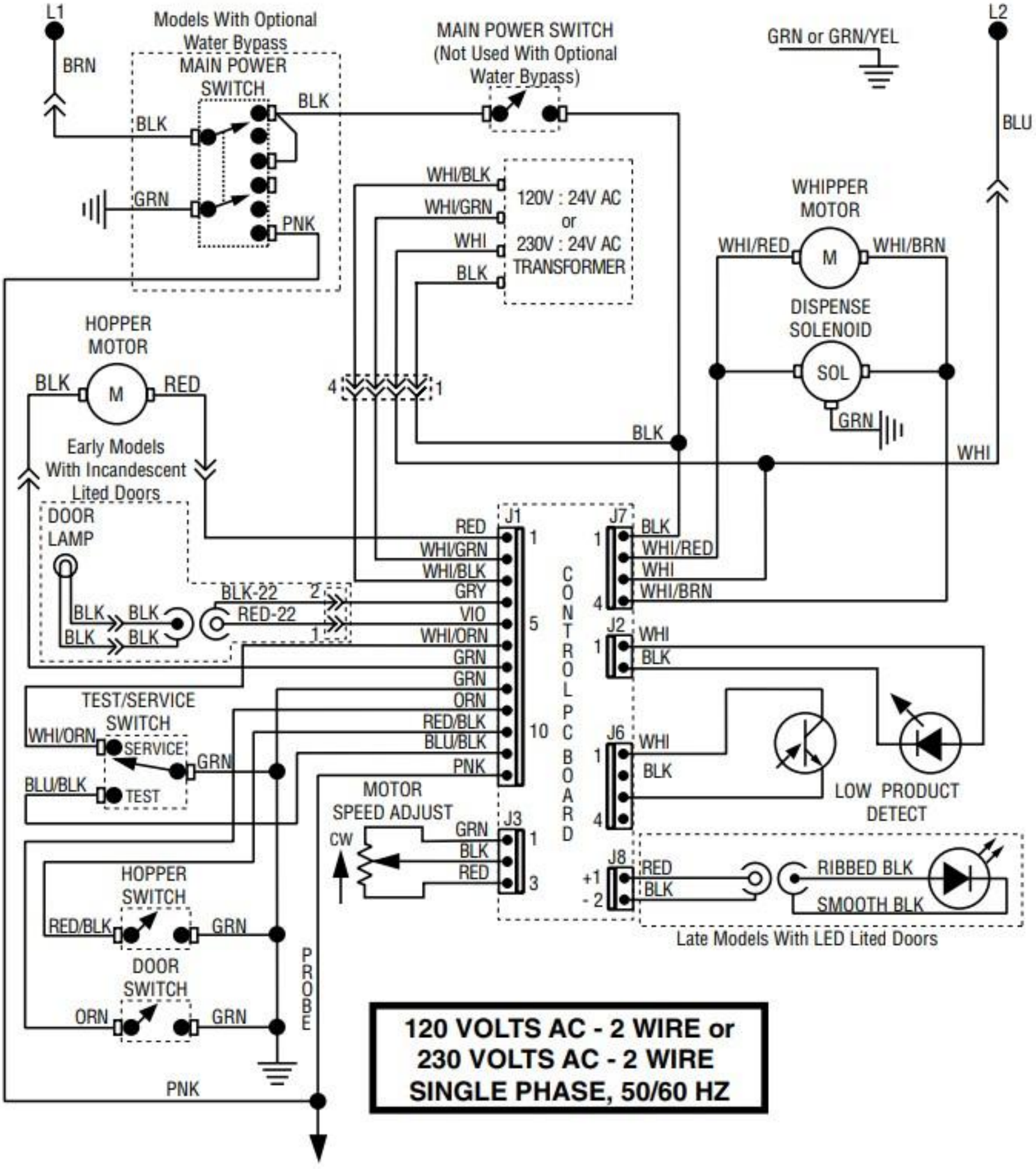
L1
L2
BRN
BLU
Models With Optional Water Bypass
MAIN POWER SWITCH
BLK
GRN
PNK
MAIN POWER SWITCH (Not Used With Optional Water Bypass)
GRN or GRN/YEL
WHI/BLK
WHI/GRN
WHI
BLK
120V : 24V AC or 230V : 24V AC TRANSFORMER
WHIPPER MOTOR
WHI/RED
WHI/BRN
M
DISPENSE SOLENOID
SOL
GRN
HOPPER MOTOR
BLK
RED
4
1
Early Models With Incandescent Lited Doors
DOOR LAMP
BLK-22
RED-22
2
1
J1
RED
WHI/GRN
WHI/BLK
GRY
VIO
WHI/ORN
GRN
GRN
ORN
RED/BLK
BLU/BLK
PNK
CONTROL PC BOARD
J7
BLK
WHI/RED
WHI
WHI/BRN
J2
WHI
BLK
J6
WHI
BLK
LOW PRODUCT DETECT
TEST/SERVICE SWITCH
WHI/ORN
SERVICE
GRN
BLU/BLK
TEST
MOTOR SPEED ADJUST
CW
J3
GRN
BLK
RED
J8
+1
- 2
RED
BLK
RIBBED BLK
SMOOTH BLK
Late Models With LED Lited Doors
HOPPER SWITCH
RED/BLK
GRN
DOOR SWITCH
ORN
GRN
PROBE
PNK
120 VOLTS AC - 2 WIRE or
230 VOLTS AC - 2 WIRE
SINGLE PHASE, 50/60 HZ