IMIX® & IMIX®-S+

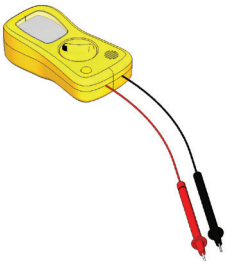

SERVICE & REPAIR MANUAL

BUNN-O-MATIC CORPORATION

POST OFFICE BOX 3227
SPRINGFIELD, ILLINOIS 62708-3227
PHONE: (217) 529-6601 FAX: (217) 529-6644

42032.0000F 10/23 ©2009 Bunn-O-Matic Corporation

BUNN-O-MATIC COMMERCIAL PRODUCT WARRANTY

Bunn-O-Matic Corp. ("BUNN") warrants equipment manufactured by it as follows:

1) Airpots, thermal carafes, decanters, GPR servers, iced tea/coffee dispensers, MCR/MCP/MCA single cup brewers, thermal servers and ThermoFresh® servers (mechanical and digital) 1 year parts and 1 year labor.
2) All other equipment - 2 years parts and 1 year labor plus added warranties as specified below:
a) Electronic circuit and/or control boards - parts and labor for 3 years.
b) Compressors on refrigeration equipment - 5 years parts and 1 year labor.
c) Grinding burrs on coffee grinding equipment to grind coffee to meet original factory screen sieve analysis - parts and labor for 4 years or 40,000 pounds of coffee, whichever comes first.

These warranty periods run from the date of installation BUNN warrants that the equipment manufactured by it will be commercially free of defects in material and workmanship existing at the time of manufacture and appearing within the applicable warranty period. This warranty does not apply to any equipment, component or part that was not manufactured by BUNN or that, in BUNN's judgment, has been affected by misuse, neglect, alteration, improper installation or operation, improper maintenance or repair, non periodic cleaning and descaling, equipment failures related to poor water quality, damage or casualty. In addition, the warranty does not apply to replacement of items subject to normal use including but not limited to user replaceable parts such as seals and gaskets. This warranty is conditioned on the Buyer 1) giving BUNN prompt notice of
any claim to be made under this warranty by telephone at (217) 529-6601 or by writing to Post Office Box
3227, Springfield, Illinois 62708-3227; 2) if requested by BUNN, shipping the defective equipment prepaid to an authorized BUNN service location; and 3) receiving prior authorization from BUNN that the defective equipment is under warranty.
THE FOREGOING WARRANTY IS EXCLUSIVE AND IS IN LIEU OF ANY OTHER WARRANTY, WRITTEN OR ORAL, EXPRESS OR IMPLIED, INCLUDING, BUT NOT LIMITED TO, ANY IMPLIED WARRANTY OF EITHER MERCHANTABILITY OR FITNESS FOR A PARTICULAR PURPOSE. The agents, dealers or employees of BUNN are not authorized to make modifications to this warranty or to make additional warranties that are binding on BUNN. Accordingly, statements by such individuals, whether oral or written, do not constitute warranties and should not be relied upon.
If BUNN determines in its sole discretion that the equipment does not conform to the warranty, BUNN, at its exclusive option while the equipment is under warranty, shall either 1) provide at no charge replacement parts and/or labor (during the applicable parts and labor warranty periods specified above) to repair the defective components, provided that this repair is done by a BUNN Authorized Service Representative; or 2) shall replace the equipment or refund the purchase price for the equipment.
THE BUYER'S REMEDY AGAINST BUNN FOR THE BREACH OF ANY OBLIGATION ARISING OUT OF THE SALE OF THIS EQUIPMENT, WHETHER DERIVED FROM WARRANTY OR OTHERWISE, SHALL BE LIMITED, AT BUNN'S SOLE OPTION AS SPECIFIED HEREIN, TO REPAIR, REPLACEMENT OR REFUND.

In no event shall BUNN be liable for any other damage or loss, including, but not limited to, lost profits, lost sales, loss of use of equipment, claims of Buyer's customers, cost of capital, cost of down time, cost of substitute equipment, facilities or services, or any other special, incidental or consequential damages.

392, A Partner You Can Count On, Air Infusion, AutoPOD, AXIOM, BrewLOGIC, BrewMETER, Brew Better Not Bitter, BrewWISE, BrewWIZARD, BUNN Espress, BUNN Family Gourmet, BUNN Gourmet, BUNN Pour-O-Matic, BUNN, BUNN with the stylized red line, BUNNlink, Bunn-OMatic, Bunn-O-Matic, BUNNserve, BUNNSERVE with the stylized wrench design, Cool Froth, DBC, Dr. Brew stylized Dr. design, Dual, Easy Pour, EasyClear, EasyGard, FlavorGard, Gourmet Ice, Gourmet Juice, High Intensity, iMIX, Infusion Series, Intellisteam, My Café, Phase Brew, PowerLogic, Quality Beverage Equipment Worldwide, Respect Earth, Respect Earth with the stylized leaf and coffee cherry design, Safety-Fresh, savemycoffee.com, Scale-Pro, Silver Series, Single, Smart Funnel, Smart Hopper, SmartWAVE, Soft Heat, SplashGard, The Mark of Quality in Beverage Equipment Worldwide, ThermoFresh, Titan, trifecta, TRIFECTA (sylized logo), Velocity Brew, Air Brew, Beverage Bar Creator, Beverage Profit Calculator, Brew better, not bitter., Build-A-Drink, BUNNSource, Coffee At Its Best, Cyclonic Heating System, Daypart, Digital Brewer Control, Element, Milk Texturing Fusion, Nothing Brews Like a BUNN, Picture Prompted Cleaning, Pouring Profits, Signature Series, Sure Tamp, Tea At Its Best, The Horizontal Red Line, Ultra are either trademarks or registered trademarks of Bunn-O-Matic Corporation. The commercial trifecta® brewer housing configuration is a trademark of Bunn-O-Matic Corporation.

INTRODUCTION

Safety first!
To avoid electrical shock, unplug dispenser from power source before servicing inside.

Basic Maintenance
In order to maintain proper machine operation, a Preventative Maintenance schedule must be performed on a regular basis.

The following procedures pretain to all versions in the IMIX family of machines unless otherwise noted.

CONTENTS

Warranty 2
User Notices 3
Site Preparation 3

Preventive Maintenance
Recommended Cleaning 4
Preventive Maintenance Schedule 5

Troubleshooting 6

Service 11

Electrical Schematics 43

USER NOTICES

All notices on this equipment are written for your protection. All notices are to be kept in good condition. Replace any unreadable or damaged labels.

SITE PREPARATION

A minimal clearance is required between the dispenser sides and the wall or another appliances. Leave some space so the dispenser can be moved for cleaning.

CLEANING

The use of a damp cloth rinsed in any mild, non-abrasive, liquid detergent is recommended for cleaning all surfaces on Bunn-O-Matic equipment. Do **NOT** clean this equipment with a water jet device.

1 x 24h

BUNN®

1. Rinse out Whipper Chambers by placing RINSE/RUN switch in the 'RINSE' position and activating DISPENSE switches.
2. Turn elbow up, remove Hoppers, refill with product and replace hoppers into dispenser.
3. Empty Drip Tray and wash in a solution of dish detergent.

1. Para limpiar las camaras de mezcla, coloque el interruptor en la posición ENJUAGUE/MARCHA ("RINSE/RUN") y pulse el boton para espumar y distribuir la bebida ("DISPENSE").
2. Gire el codo hacia arriba, remueve las tolvas, llene las tolvas con producto y coloque las tolvas nuevamente en la maquina.
3. Vacie la bandeja de goteo y limpiela con un detergente liquido suave no abrasivo.

7 1 x 7d

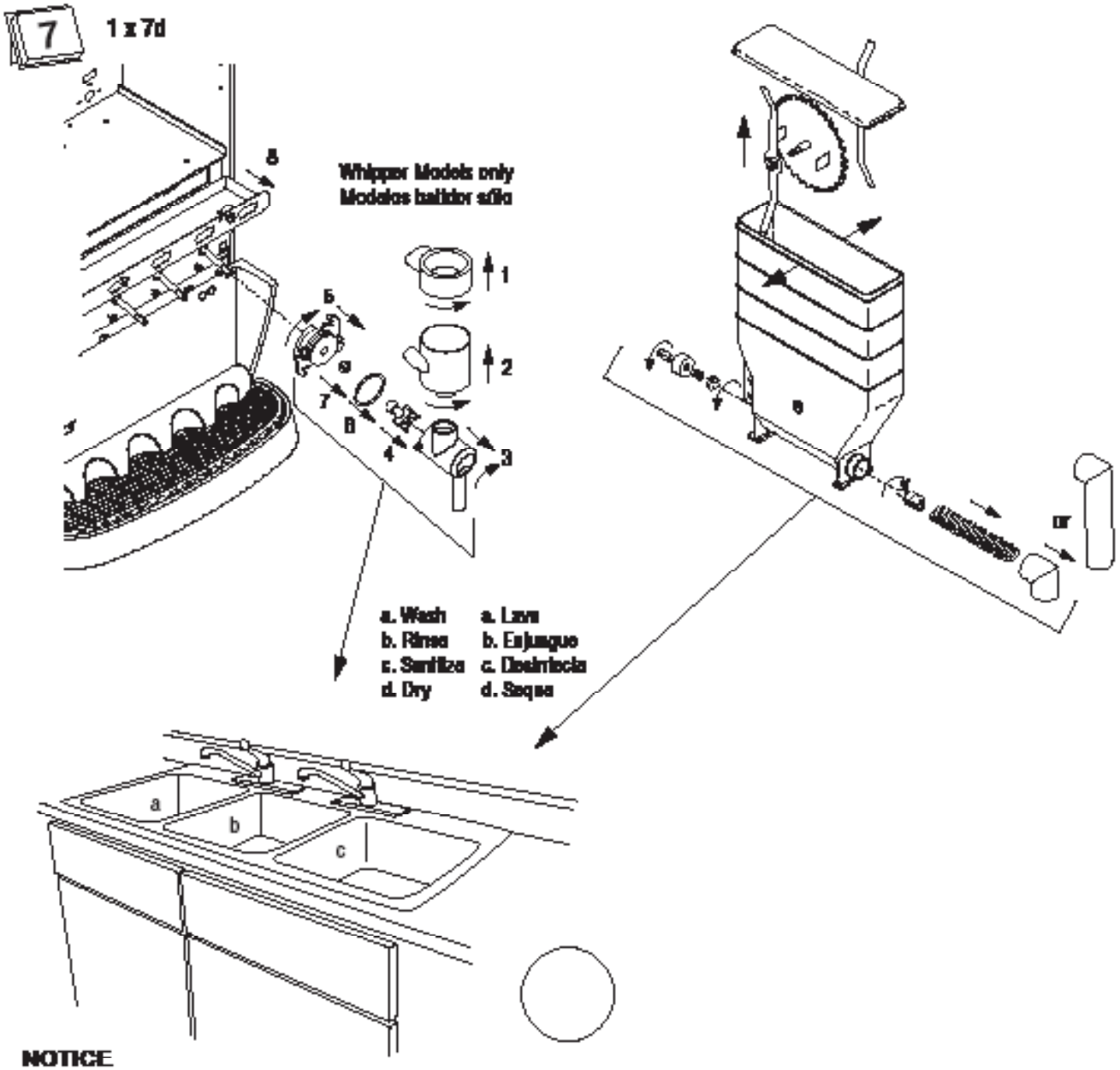

NOTICE

The cleaning instructions noted above are for non-dairy sugar based food products. When dispensing any other food product, the cleaning cycle for the whipping chamber assembly and ejector elbow must be performed daily.

NOTA:

Las instrucciones de limpieza descritas anteriormente excluyen productos lacteos azucarados. La limpieza de las camaras de mezcla y de los codos de salida de cada tolva deberá realizarse diariamente.

©2014 BUNN-O-MATIC CORPORATION

REQUIRED REGULAR MAINTENANCE:

When performing Daily-Weekly Cleaning procedures, inspect o-rings, seals, and bushings for signs of wear or damage and replace immediately.

Rinse once or twice daily or as required. On models IMIX-3, 4, 5, 3S+, & 5S+ a rinse reminder can be set using the Rinse Alarm.

Check and/or replace every 6 months or as required:

32906.0001	Mixing Chamber Kit (Includes items indented below)
25732.0000	Steam Collector
25733.0003	Mixing Chamber
25734.0000	Whipper Chamber
25736.0000	Dispense Tip
24733.0010	O-ring
25902.0000	Frother
26356.0000	Shaft Seal
28866.0000	Receptacle
25903.0000	Elbow

Check and/or replace every 3 months or as required:

26356.1000	Whipper Shaft Seal Kit (Contains 6 Seals)

TROUBLESHOOTING

A troubleshooting guide is provided to suggest probable causes and remedies for the most likely problems encountered. If the problem remains after exhausting the troubleshooting steps, contact the Bunn-O-Matic Technical Service Department.

- Inspection, testing, and repair of electrical equipment should be performed only by qualified service personnel.
- All electronic components have 120 volt ac and/or low voltage dc potential on their terminals. Shorting of terminals or the application of external voltages may result in board failure.
- Intermittent operation of electronic circuit boards is unlikely. Board failure will normally be permanent. If an intermittent condition is encountered, the cause will likely be a switch contact or a loose connection at a terminal or crimp.
- Keep away from combustibles.

WARNING –
- Exercise extreme caution when servicing electrical equipment.
- Unplug the dispenser when servicing, except when electrical tests are specified.
- Follow recommended service procedures
- Replace all protective shields or safety notices

PROBLEM	PROBABLE CAUSE	REMEDY
Product will not dispense: -no water and no powder (#2,3,7,11) -yes water and no powder (#6,9,10,12) -no water and yes powder (#1,4,5,8)	1. No water	Water lines and valves to the dispenser must be open. Read display for error.
	2. No power or incorrect voltage to the dispenser	Check for 120 volts at the terminal block across the black and white wires on a two wire 120 volt dispenser
	3. Dispense switch	Test dispense switch circuit, see “TEST SWITCHES ?” under “DIAGNOSTICS ?” menu.
	4. Dispense solenoid valve	Test dispense solenoid valve circuit, see “TEST DISPENSE HEAD ?” under “DIAGNOSTICS ?” menu.
	5. Solenoid valve (inlet)	Test inlet solenoid valve, see “TEST REFIL ?” under “DIAGNOSTIC ?” menu. Read display for error.
	6. Auger drive	Test auger motor circuit, see “TEST DISPENSE HEAD ?” under “DIAGNOSTICS ?” menu.
	7. Overflow protection Switch	Check for water in overflow cup. Read display for error.
	8. Lime build-up	Inspect tank assembly for excessive lime deposits. Delime as required.
	9. Hopper not seated on panel	Seat hopper so that front leg engages metal tab on hopper panel.
	10. Hopper out of product	Refill hopper with correct product
	11. Rinse cycle not run within programmed time frame	Refer to Operations – Rinse Timer
	12. Low product detect on and low powder.	Remove hopper to check level or calibrate hopper

TROUBLESHOOTING (cont.)

PROBLEM	PROBABLE CAUSE	REMEDY
Water is not hot	1. Limit thermostat	Disconnect power and disconnect limit thermostat from wiring harness and test for continuity
	2. Control thermostat	(A) Check tank temperature setting in Programming menu (B) Check temperature probe function and calibration, see “CAL tank temp” under “CALIBRATION ?” menu
	3. Triac	Test triac, use “TANK HEATER ?” under “DIAGNOSTICS ?” menu
	4. Tank heater	Disconnect wire leads from tank heater, check for continuity across tank heater leads.
Spitting or excessive steaming	1. Lime build up	Inspect tank assembly for excessive lime deposits. Delime as required.
	2. Control thermostat	(A) Check tank temperature setting in Programming menu (B) Check temperature probe function and calibration, see “CAL tank temp” under “CALIBRATION ?” menu
Dripping from dispense tip	1. Lime build up	Inspect tank assembly for excessive lime deposits. Delime as required.
	2. Dispense Solenoid Valve	Remove the dispense solenoid valve and clear any obstructions. Rebuild or replace valve as necessary.
Water flows into tank continuously	1. Level probe	Check for lime buildup on level probe. Clean as required.
	2. Solenoid valve (inlet)	Test inlet solenoid valve, see “TEST REFIL ?” under “DIAGNOSTIC ?” menu
	3. Control board	Test inlet solenoid valve circuit, see “TEST REFIL ?” under “DIAGNOSTIC ?” menu
Product overflows mixing chamber	1. Dispense tip	Check dispense tip for obstructions.
	2. Dispense solenoid valve	Check valve flow rate.
	3. Vacuum fan	Check vacuum fan operation.

TROUBLESHOOTING (cont.)

PROBLEM	PROBABLE CAUSE	REMEDY
Weak product	1. Water temperature	Place an empty container beneath the dispense tip. Initiate a dispense cycle and check water temperature immediately below the dispense tip with a thermometer. Repeat until maximum temperature is reached. Reading should be 185 – 190°F. Adjust tank temperature setting using programming menus.
	2. Whipper motor	Test whipper motor circuit, see “TEST DISPENSE HEAD ?” under “DIAGNOSTICS ?” menu.
	3. Frother	Check that frother is properly installed; refer to cleaning decal inside front door.
	4. Dispense solenoid valve	Test dispense solenoid valve flow rate. In the “RINSE” mode, momentarily press dispense switch, and catch water in calibrated container. Unit should dispense 12±.5 oz during 10 second rinse cycle.
	5. Auger motor	Test auger motor circuit, see “TEST DISPENSE HEAD ?” under “DIAGNOSTICS ?” menu
	6. Auger spring	Check that auger spring is properly installed, refer to cleaning decal inside of front door.
	7. NORMAL/PROGRAM/RINSE switch	Check that switch is set in the “NORMAL” position.
	8. Hopper out of product	Refill hopper with correct product
	9. Incorrect throw weight	Check throw weight
Dispenser making unusual noises	1. Plumbing lines	Plumbing lines should not be resting on the counter top.
	2. Water Supply	Water pressure to the dispenser not to exceed 90 psi (620 kPa) Install a regulator if necessary to lower the working pressure to approximately 50 psi (345kPa).
	3. Tank heater	Remove and clean lime off tank heater
	4. Frother	Check for cleanliness and correct installation of chamber and frother
Excessive dust	1. Fan	(A) remove powder tray and clean as required (B) check that air is blowing from slots in dispenser bottom panel.
Display not lit	1. Lamp	Replace lamp if required
	2. Ballast	Disconnect ballast from power supply, check for continuity between two black leads.
	3. Night Mode	Check Night Mode Switch

TROUBLESHOOTING (cont.)

PROBLEM	PROBABLE CAUSE	REMEDY
LCD screen displays: “FILL TIME TOO LONG”, “CHECK WATER SUPPLY”	Occurs when refill runs without dispenses and without satisfying tank probe for more than 10 minutes	(A) Test inlet solenoid valve, see “TEST REFIL ?” under “DIAGNOSTIC ?” menu (B) Check that unit is connected to water supply, and water supply is turned on.
LCD screen displays; “HEATING TIME” “TOO LONG”	Occurs when heater runs for more than 120 minutes, refill does not come on , and tank is still below target temperature.	See “water is not hot” in PROBLEM section above.
“CHECK HEATING” “CIRCUIT” LCD screen displays: “OVERFLOW CUP” “FULL, EMPTY CUP”	Occurs when overflow cup is full of water	(A) Empty overflow cup of water (B) Check for lime on level probe (C) Test inlet solenoid valve, see “TEST REFIL ?” under “DIAGNOSTIC ?” menu (D) Check float switch for continuity
“CHECK REFILL” “CIRCUIT” LCD screen displays: “TANK TEMP SENSOR” “OUT OF RANGE”,	Occurs when tank sensor is disconnected or resistance to high	(A) Check that tank temp sensor is connected to main wiring harness. (B) Test tank temp sensor, see “CAL tank temp” under “CALIBRATION ?” menu (C) Verify wiring
“CHECK FOR BAD” “CONNECTIONS” LCD screen displays: “TANK TEMP SENSOR” “OUT OF RANGE”,	Occurs when tank temperature sensor wires are shorted together, or resistance is to low.	(A) Disconnect tank temperature from main wire harness, check for zero resistance across leads. (B) Test tank temp sensor, see “CAL tank temp” under “CALIBRATION ?” menu (C) Verify wiring
“CHECK WIRE FOR” “SHORTS” LCD screen displays: “AUGER 1 FAULT!” “CHECK MOTOR WIRING”,	Occurs when auger motor should be running, but no pulses are detected from the RPM sensor	Test auger motor circuit, see “TEST DISPENSE HEAD ?” under “DIAGNOSTICS ?” menu
“CHK RPM SENSOR” “CHK MOTOR WIRING” LCD screen displays: “DISPLAY BOARD” “COMM FAULT!”	Occurs if display communication lost Not applicable on (S)	(A) Check wiring between main control board and display (B) Replace display board
“CHECK DISPLAY” “ WIRING CONNECTS” LCD screen displays: “HOPPER 1 EMPTY?” “MUST FILL HOPPER”	Occurs when low powder sensor returns a value lower than threshold Not applicable on (S)	(A) fill hopper with correct product
LCD screen displays: “DISPNSE TO LONG” “CHECK SWITCHES”,	Occurs when hot water is dispensed for more than 2 minutes	(B) Calibrate hopper level sensor, see “CAL HOPPER 1 ?” under “CALIBRATION ?” menu Test dispense switch circuit, see “TEST SWITCHES ?” under “DIAGNOSTICS ?” menu.
“CHECK WIRE FOR” “SHORTS” LCD screen displays: “RINSE REQUIRED!” PLEASE RINSE NOW”	Occurs when a rinse has not been performed within the specified time period and the rinse alarm is enabled.	Refer to Operations – Rinse Timer
“TO OPERATE” LCD screen displays: “ENTER SETUP MODE” “TO CLEAR FAULT”	All fault messages show this for the last of 3 alternating screens.	Enter “SETUP” mode to clear fault after problem has been corrected.

NOTES

SERVICE

This section provides procedures for testing and replacing various major components used in this dispenser should service become necessary. Refer to Troubleshooting for assistance in determining the cause of any problem.

WARNING - Inspection, testing, and repair of electrical equipment should be performed only by qualified service personnel. The dispenser should be disconnected from the power source when servicing, except when electrical tests are required and the test procedure specifically states to connect the dispenser to the power source.

COMPONENT ACCESS

WARNING - Disconnect the dispenser from the power source before the removal of any panel or the replacement of any component.

All components are accessible by opening the door, removal of the door panels, dispenser top covers, hopper(s), hopper support plate, splash guard, splash panel w/drip tray, lower front access panel and rear access cover.

Refer to the contents listing for component location.

INDEX

Access Panels 12
Audio Indicator 13
Auger Drive Components 14
Ballast 17
Control Board (Main) 18
Programming Touchpad 22
Programming Calibration & Diagnostics 23
Control Board (Memory, Early Models) 24
Temperature Probe 25
Dispense Switches 26
EMI Filter 28
Vacuum Fan 29
Frother & Whipper Motor 30
Lamp Holder 32
Lamp 32
LED Lighting 33
Limit Thermostat 34
ON/OFF/NIGHT Switch 35
NORMAL/PROGRAM/RINSE Switch 36
Overflow Protection Switch 37
Solenoid (Inlet) 38
Solenoid (Dispense) 39
Tank Heater 40
Transformer 41
Triac 42

ACCESS PANELS

Location:

All access panels are similar through the whole IMIX family (IMIX-5 shown). Before removing panels, make sure power is OFF to the machine and water is disconnected accept where indicated in testing procedures. Retain all screws and other attaching hardware for re-assembly.

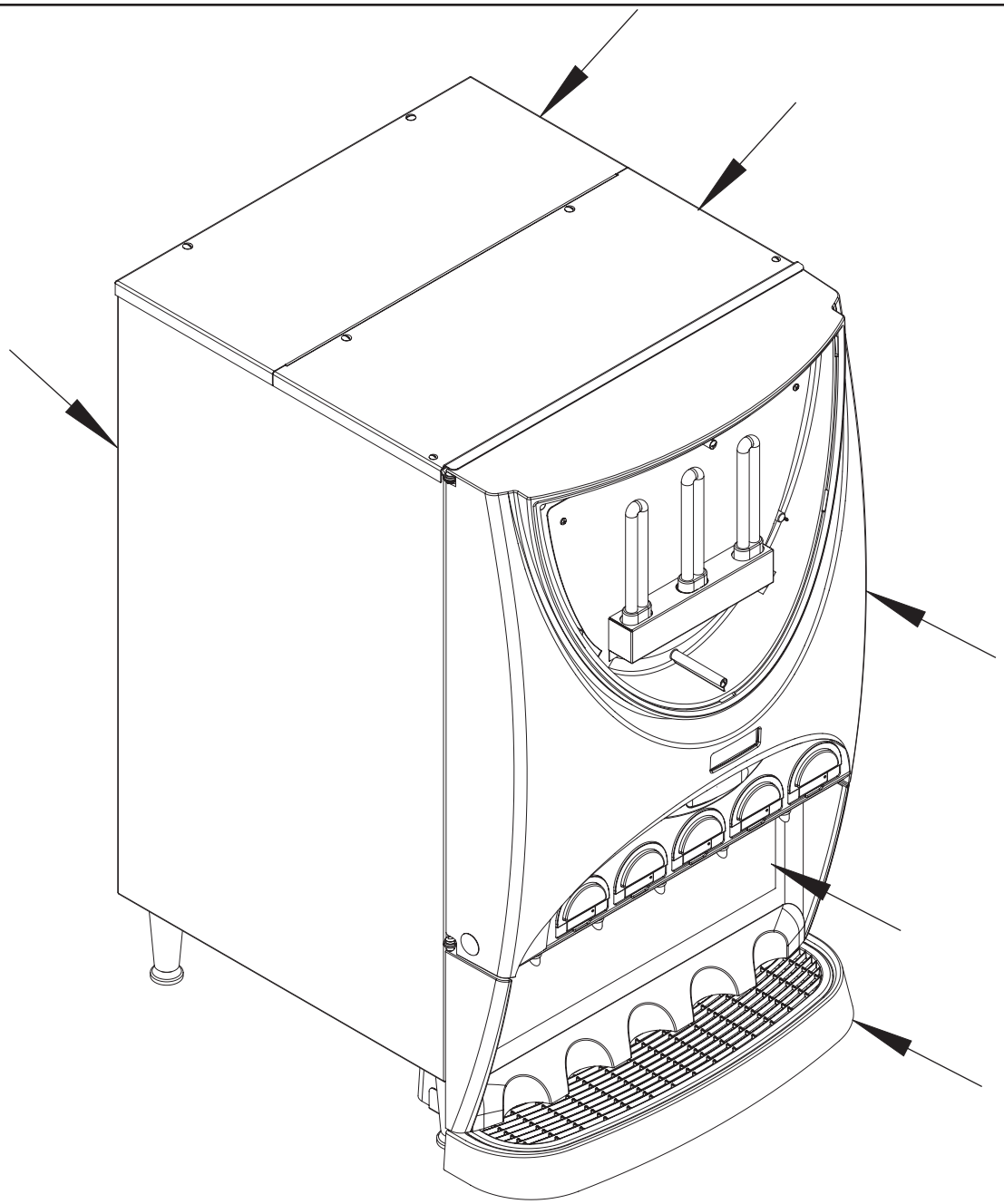

FIG. 1 ACCESS PANELS

AUDIO INDICATOR (IMIX-3, 4 & 5 only)

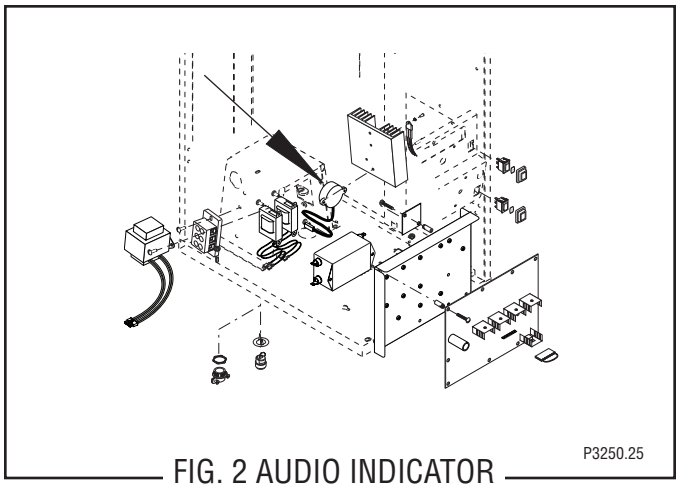

FIG. 2 AUDIO INDICATOR BEEPER

Location:

The BEEPER is located on the back side of the component bracket assembly.

Test Procedures:

1. Enter Programming to verify the “Audible Alarm” is activated. It will always beep when pressing switches during program modes.

AUDIBLE ALARM ?
NO EXIT YES

If activated, verify it is plugged correctly into J8 on the control board.

Removal and Replacement:

1. Disconnect the dispenser from power.
2. Disconnect the two pin connector from J8 of the main control board.
3. Loosen two screws from underneath and remove the component mounting bracket.
4. Remove the two #6-32 screws attaching the Audio Indicator to the component mounting bracket.
5. Remove and discard the audio indicator.
6. Install new audio indicator using two #8-32 screws to secure indicator to the component bracket.
7. Refer to Fig. 3 when reconnecting the wires.

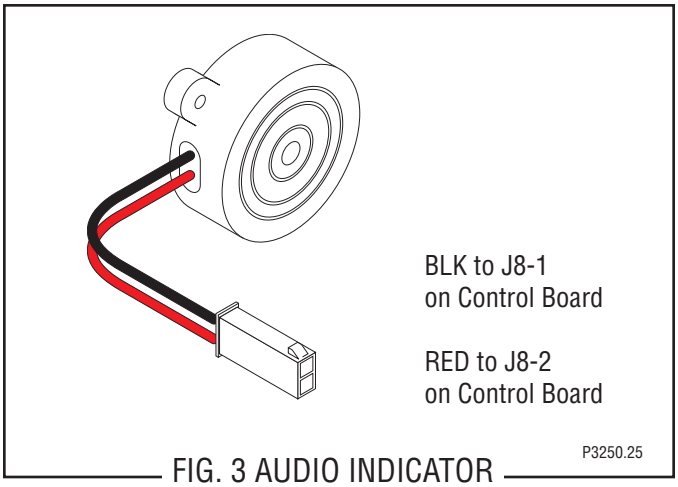

FIG. 3 AUDIO INDICATOR BEEPER

Specifications:

SOUND PRESSURE LEVEL	90 dBA
RESONANT FREQUENCY	2800 Hz
RATED CURRENT	7 mA
RATED VOLTAGE	12 VDC
OPERATING VOLTAGE	3 - 28 VDC

AUGER DRIVE COMPONENTS

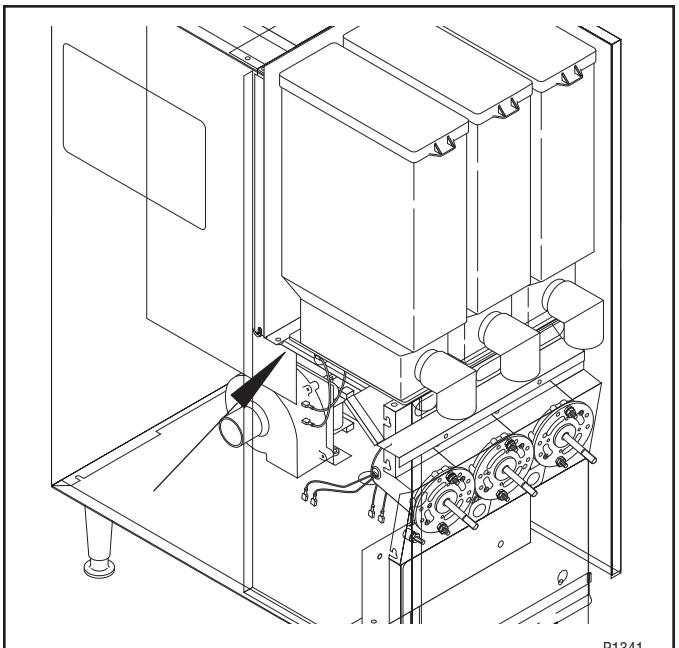

FIG. 4 AUGER DRIVE COMPONENTS

Location:

The auger components are located inside the bottom part of the hopper except for the auger drive bracket, washer and locknut, which are located on the outside bottom rear of the hopper. The auger motors are located on the rear of the auger motor mounting panel. Refer to Fig. 5 for disassembly and assembly.

Test Procedures - Auger Motors without Proximity Sensor

1. Disconnect the dispenser from the power source.
2. Remove hoppers. Turn elbow up.
3. Back probe check the voltage across the positive and negative wire with a voltmeter. Connect the dispenser to the power supply. With the rinse/run switch in the run position press the appropriate dispense switch. After a .6 second delay the indication must be 4.0 to 24.5 volts dc.
4. Disconnect the dispenser from the power supply.

If voltage is present as described and the auger motor does not rotate, replace the auger motor.
If voltage is not present as described, refer to the wiring diagrams and check the dispenser wiring harness back to control board. Also verify 24 vac is supplied to control board from transformer - Refer to Control Board Testing.

Test Procedures - Auger Motors with Proximity Sensor. (IMIX only)

1. Open door and flip switch into **PROGRAM** mode.
2. Scroll to Diagnostics and select **YES**.
3. Scroll to Test Augers.
4. Press the appropriate dispense switch to activate motor. Refer to Diagnostics for further direction.

Removal, Cleaning and Replacement:

Hopper & Auger:

1. Open the dispenser door and turn elbow up.
2. Lift the front edge of hopper assy over the tab on hopper support plate (16) and slide hopper assembly out the front of the dispenser.
3. Remove hopper lid (1) and empty product.
4. Pull off the ejector elbow (10).
5. Remove agitator disk assy (2) by pushing out on the side of the hopper, rotating the agitator disk assy out of the mounting hubs and lifting the agitator disk assy from the hopper. Remove the mixing blades (4) from the agitator disk by tugging sharply.
6. Remove auger (9) by pulling it out the front of the hopper (8).
7. Remove the auger drive bracket by turning it clockwise while holding the auger drive shaft firmly.
8. Slide auger drive shaft (5) from auger drive shaft bushing (3) and remove from hopper (8).
9. Remove locknut (7) from auger drive shaft bushing (3) and remove auger drive shaft bushing from hopper (8).
10. Wash components in a mild solution of dish detergent using a bristle brush when needed.
11. Rinse and dry each item thoroughly.
12. Check for damaged or broken components, replace any if necessary and reassemble hopper assembly.
13. Install hopper assy in the dispenser by sliding hopper assy in the guides on the hopper support plate (16) until the slot in the bottom rear the hopper seats against the shoulder screw (15) in the hopper support plate.

AUGER DRIVE COMPONENTS

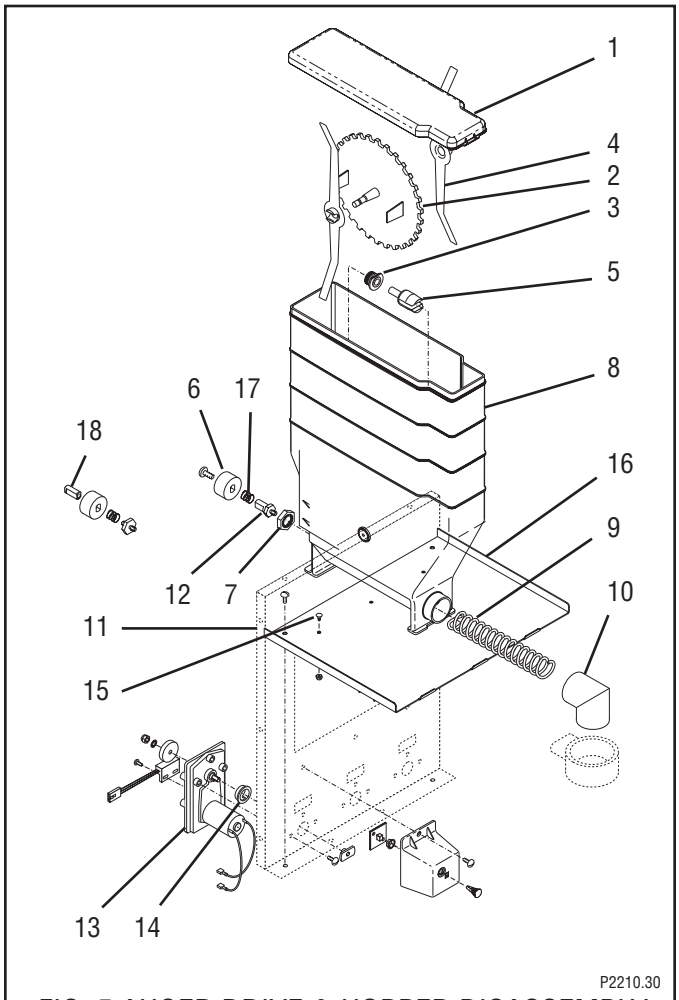

FIG. 5 AUGER DRIVE & HOPPER DISASSEMBLY

1. Hopper Lid
2. Agitator Disk Assy
3. Auger Drive Shaft Bushing
4. Mixing Blade
5. Auger Drive Shaft
6. Auger Shaft Coupling
7. Locknut
8. Hopper
9. Auger Wire
10. Ejector Elbow
11. Auger Motor Mounting Panel
12. Auger Drive Coupling
13. Auger Motor
14. Dust Seal
15. Shoulder Screw
16. Hopper Support plate
17. Coupling Spring
18. Hex Coupling

Auger Drive Motor (Refer to Figs. 5 thru 9)

1. Remove all hopper assemblies and set aside for reassembly.
2. Remove the four #8-32 screws securing the hopper support plate (16) and set aside for reassembly.
3. Remove the #8-32 locking screws, located inside the dispenser housing on the front of the auger motor mounting panel (11), securing auger motor (13) to the rear of the auger motor mounting panel (11).
4. Disconnect the wires from the auger motor (13) to be removed.
5. Disconnect RPM sensor plug.
6. Remove auger motor (13) and dust seal (14) as an assembly.
7. Remove dust seal (14) from auger motor (13).
8. Remove the #8-32 screws securing the auger motor to the auger motor mounting bracket.
9. Remove auger motor and discard.
10. Using #8-32 screws, install new auger motor (13) on mounting bracket (11).
11. Install dust seal (14) on auger motor shaft.
12. Using #8-32 locking screws install auger motor and dust seal to the rear of the auger motor mounting panel (11)
13. Reconnect the wires to the terminals on the auger motor.
14. Reconnect RPM sensor plug.
15. Install hopper support plate (16) and all hopper assemblies.
16. Refer to Fig. 6 when reconnecting wires.

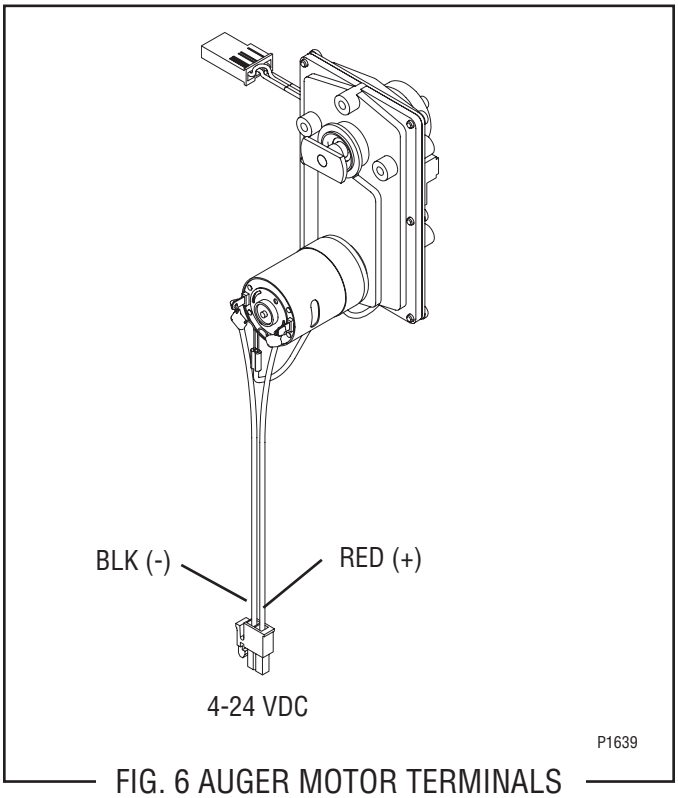

FIG. 6 AUGER MOTOR TERMINALS

AUGER MOTOR PROXIMITY RPM SENSOR (IMIX-3, 4 & 5 only)

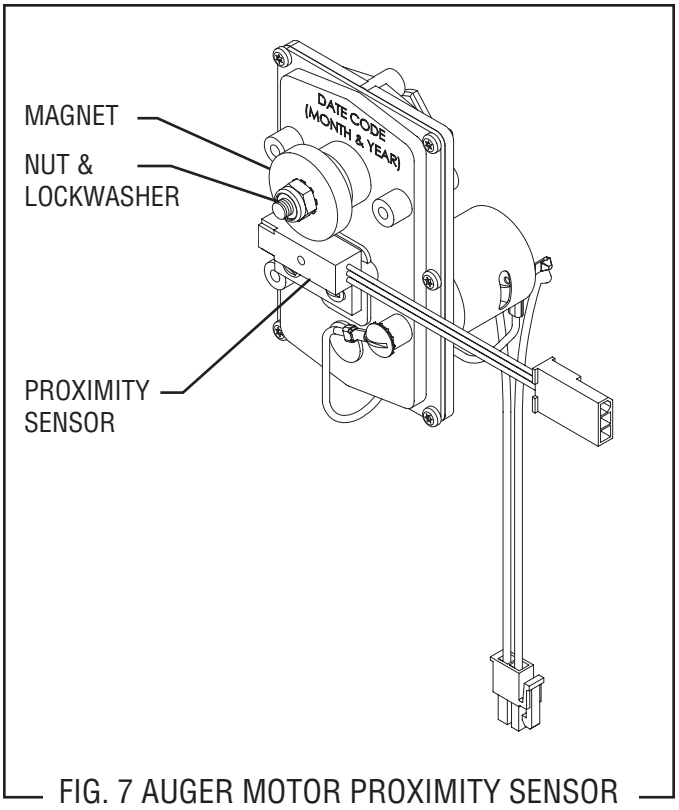

FIG. 7 AUGER MOTOR PROXIMITY SENSOR

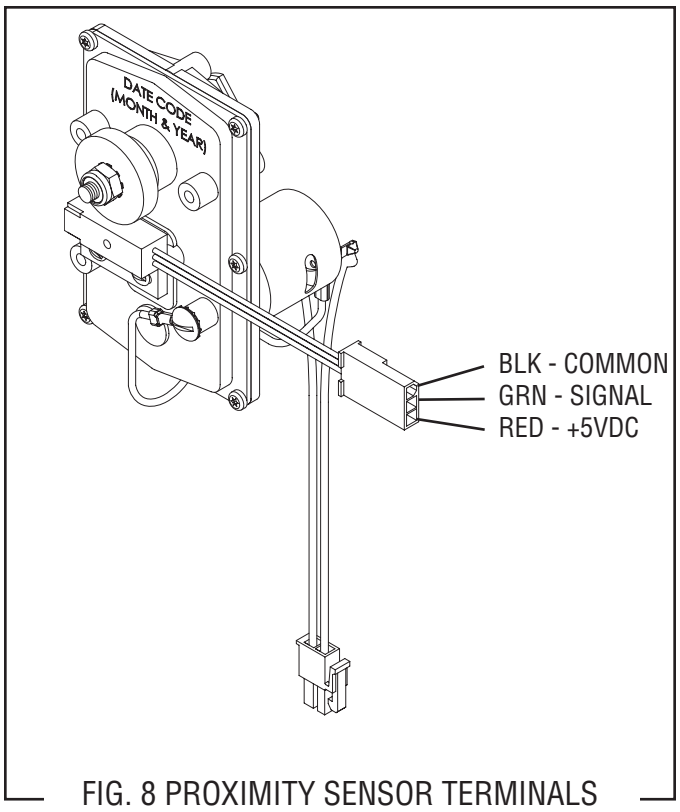

FIG. 8 PROXIMITY SENSOR TERMINALS

Location:

The Proximity Sensor and Magnet are located on the back side of the Auger Motor assembly.

Test Procedures:

1. Ensure the the nut and lockwasher are tightened securely to prevent the Magnet from slipping, which causes a false reading when testing.
2. With a voltmeter, back probe the RED and BLK wires. The indication should be +5VDC.
3. Back probe the BLK and GRN wires. The indication should be an alternating reading of 5-0-5-0VDC. With power ON, the reading will actually fluctuate in the 3VDC range.

If voltage is present as described, the Proximity RPM Sensor is operating properly.

Removal and Replacement:

1. Disconnect the dispenser from the power source.
2. Disconnect the three pin connector from the main wirring harnes of the motor being serviced.
3. Remove the #10 nut and lockwasher securing the magnet hub to the auger motor shaft.
4. Remove the two #4-40 screws securing the sensor to the auger motor housing.
5. Remove and discard faulty parts.
6. Install a new sensor to the motor housing using the two #4-40 screws.
7. Install a new magnet hub using the #10 lockwasher and nut. Tighten the nut securely to prevent the magnet from slipping.
8. Connect the three pin connector to the dispenser main wiring harness.

BALLAST

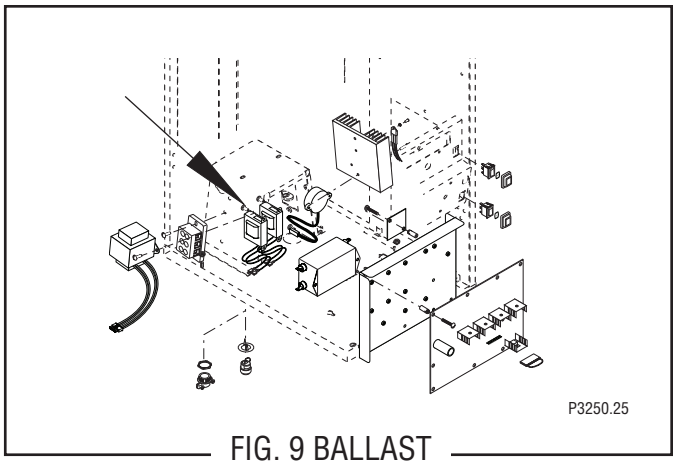

FIG. 9 BALLAST

Location:

The front door lamp ballasts are located behind the front access panel and may be on either side of the component bracket assembly.

Test Procedure:

1. Disconnect the dispenser from the power source.
2. Disconnect the two black leads on the ballast from the dispenser main harness.
3. Check for continuity between the two black leads on the ballast.

If continuity is present as described the ballast is operating properly.
If continuity is not present as described, replace the ballast.

Removal and Replacement:

1. Disconnect the wires from the ballast.
2. Remove the two #8-32 screws securing the ballast to the component bracket.
3. Remove and discard ballast.
4. Install new ballast using two #8-32 screws to secure ballast to the component bracket.
5. Refer to Fig. 10 when reconnecting the wires.

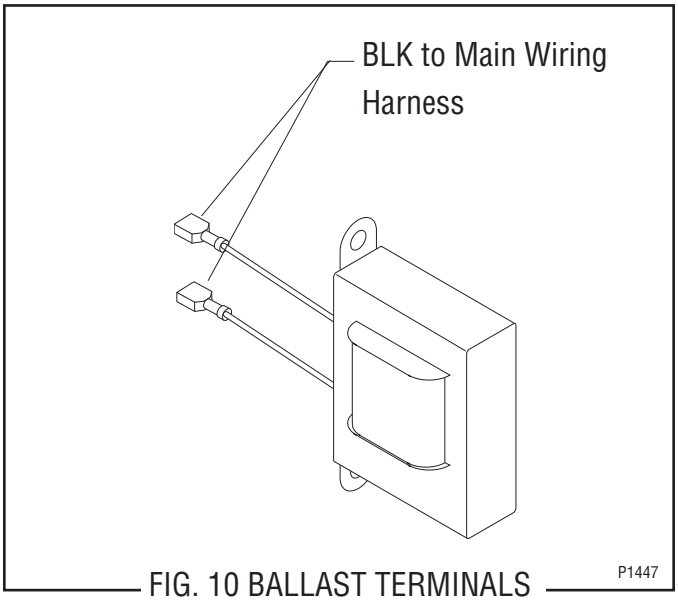

FIG. 10 BALLAST TERMINALS

CONTROL BOARD (IMIX-3, 4 & 5 only)

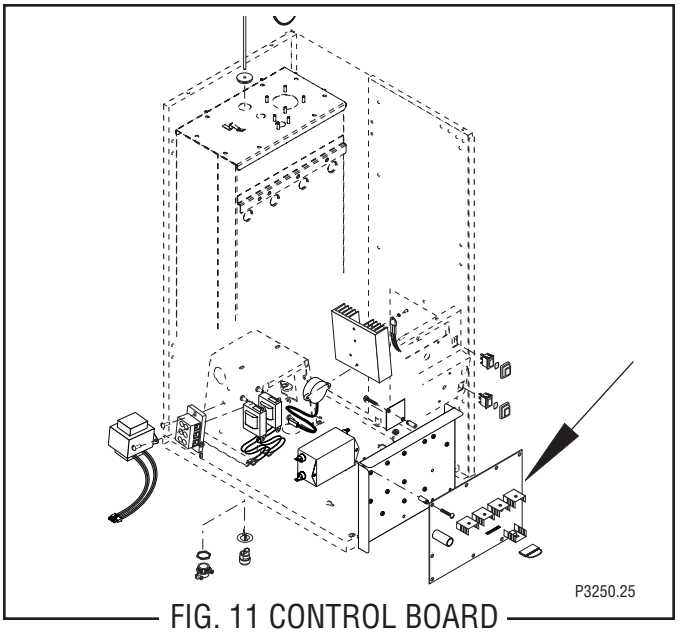

FIG. 11 CONTROL BOARD

Location:

The Control Board is located behind the lower front access cover mounted on the component bracket.

Test Procedure:

Power Supply Circuitry:

1. Disconnect the dispenser from the power source.
2. With a voltmeter, back probe check the voltage across pins 4 & 5 of the J2 connector on the wiring harness. Connect the dispenser to the power source. The indication must be 24 volts ac.
3. Disconnect the dispenser from the power source.

If voltage is present as described, proceed to step 4. If voltage is not present as described, refer to the Wiring Diagrams and check the dispenser wiring harness back to the transformer (See TRANSFORMER).

4. With a voltmeter, back probe check the voltage across pins 3 & 4 of the J1 connector on the wiring harness. Connect the dispenser to the power source. The indication must be:
   a) 120 volts ac for two wire 120 volt models, three wire 120/208 volt and 120/240 volt models.
   b) 240 volts ac for two wire 240 volt models.
   c) 230 volts ac for two wire 230 volt models.
5. Disconnect the dispenser from the power source.

If voltage is present as described, proceed to step 9. If voltage is not present as described, refer to the Wiring Diagrams and check the dispenser wiring harness back to the power cord. Also check for an open float switch.

Liquid Level Control Circuitry:

6. Gently pull the liquid level probe out of the tank lid and inspect for corrosion. Replace it if necessary.
7. Place the probe so that neither end is in contact with any metal surface of the dispenser.
8. With a voltmeter, check the voltage across J1 pins 4 and 8 on the control board. Connect the dispenser to the power source. The indication must be:
   a) 120 volts ac for two wire 120 volt models, three wire 120/208 volt and 120/240 volt models,
   b) 240 volts ac for two wire 240 volt models,
   c) 230 volts ac for two wire 230 volt models, after a delay of approximately 10 seconds.
9. Move the probe's flat end to the dispenser housing. The indication must be 0.
10. Move the probe's flat end away from the housing. The indication must, again, be:
    a) 120 volts ac for two wire 120 volt models, three wire 120/208 volt and 120/240 volt models,
    b) 240 volts ac for two wire 240 volt models,
    c) 230 volts ac for two wire 230 volt models, after a delay of approximately 5 seconds.
11. Disconnect the dispenser from the power source.

If the voltage is present as described, re-install the probe. The liquid level control circuitry is operating properly. If the voltage is not present as described, check the pink probe wire and green tank wire for continuity.

Removal and Replacement:

1. Loosen the two #8-32 screws securing the com-

CONTROL BOARD (cont.)

ponent mounting bracket to the dispenser base.

2. Carefully pull the entire component bracket forward and rotate to gain access to the control board.
3. Disconnect all the plugs on the main wiring harness from the connectors on the control board.
4. Remove the four #6-32 screws securing the control board to the component bracket.
5. Remove the spacers from the control board and discard.
6. Install the spacers on to the new control board
7. Install new control board on the component bracket using four #6-32 screws.

NOTE: Verify the ground wire is connected to the board mounting screw.

8. Reconnect all plugs on the main harness to the connectors on the control board.

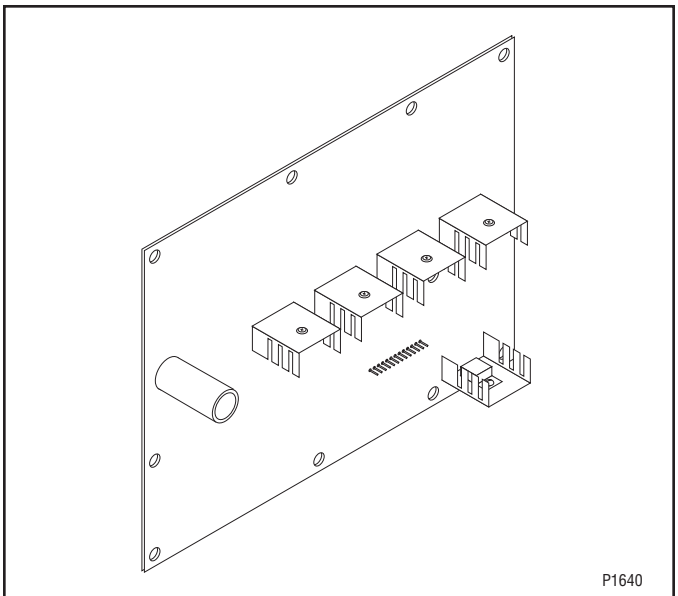

FIG. 12 CONTROL BOARD CONNECTORS

CONTROL BOARD (IMIX-3S+ & 5S+ only)

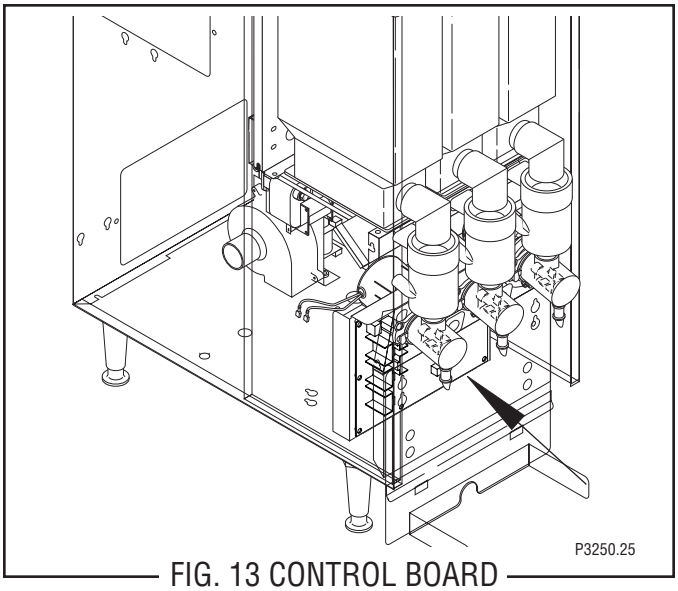

FIG. 13 CONTROL BOARD

Location:

The Control Board is located behind the lower front access cover mounted on the component bracket.

Test Procedure:

Liquid Level Control Circuitry:

1. Disconnect the dispenser from the power source.
2. With a voltmeter check the voltage across pins 4 & 5 of the J5 connector on the wiring harness. Connect the dispenser to the power source. The indication must be 24 volts ac.
3. Disconnect the dispenser from the power source.

If voltage is present as described, proceed to step 4.
If voltage is not present as described, refer to the wiring diagram and check the dispenser wiring harness back to the transformer.

4. With a voltmeter check the voltage across pins 15 & 16 of the J4 connector on the wiring harness. Connect the dispenser to the power source. The indication must be:
   a) 120 volts ac for two wire 120 volt models
   b) 120 volts ac for three wire 120/208 volt models or three wire 120/240 volt models
   c) 240 volts ac for two wire 240 volt models.
   d) 230 volts ac for two wire 230 volt models.
5. Disconnect the dispenser from the power source.

If voltage is present as described, proceed to step 6.
If voltage is not present as described, refer to the wiring diagram and check the dispenser wiring harness back to the power cord.

6. Gently pull the liquid level probe out of the tank lid and inspect for corrosion. Replace it if necessary.
7. Place the probe so that neither end is in contact with any metal surface of the dispenser.

If the voltage is present as described, re-install the probe. The liquid level control circuitry is operating properly.
If the voltage is not present as described, check the pink probe wire and green tank wire for continuity and overflow protection switch.

8. Check that the “Rinse/Run” switch is in the “Run” position.
9. With a voltmeter check the voltage across the red (+) terminal and the black (-) terminal of the auger motor. Connect the dispenser to the power source. Press the appropriate dispense switch. After a delay of about .6 seconds, the indication must be between +4.0 and +24.5 volts dc.

If the voltage is present as described, the hopper motor control circuitry is operating properly.
If the voltage is not present as described, replace the control circuit board.

SERVICE (cont.)

CONTROL BOARD (cont.)

Removal and Replacement:

1. Disconnect the three plugs on the main wiring harness from the connectors on the control board.
2. Remove the four #6-32 keps nuts securing the control board to the component bracket.
3. Remove control board and discard.
4. Install new control board on the component bracket using four #6-32 keps nuts.
5. Reconnect the three plugs on the main harness to the connectors on the control board.

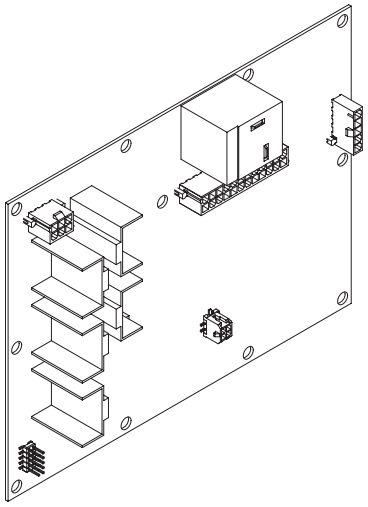

FIG. 14 CONTROL BOARD CONNECTORS

PROGRAMMING TOUCHPAD

P1680

FIG. 15 PROGRAMMING TOUCHPAD

Location:

The Touchpad is located on the front of the door below the display panel.

Test Procedure:

Enter Programming and Test Switches.

Removal and Replacement:

1. Disconnect the dispenser from the power source.
2. Open the dispenser door.
3. Remove the four #8-32 screws securing the lower door panel and remove the panel.
4. Disconnect the touchpad harness from the display board.
5. Carefully peel the touchpad from the front of the door.
6. Remove any excess adhesive from the door surface.
7. Remove the backing from the new touchpad.
8. Feed the seven pin harness through the openning and apply the new touchpad to the door.
9. Connect the touchpad harness to the display board.
10. Install the lower door panel using the four #8-32 screws

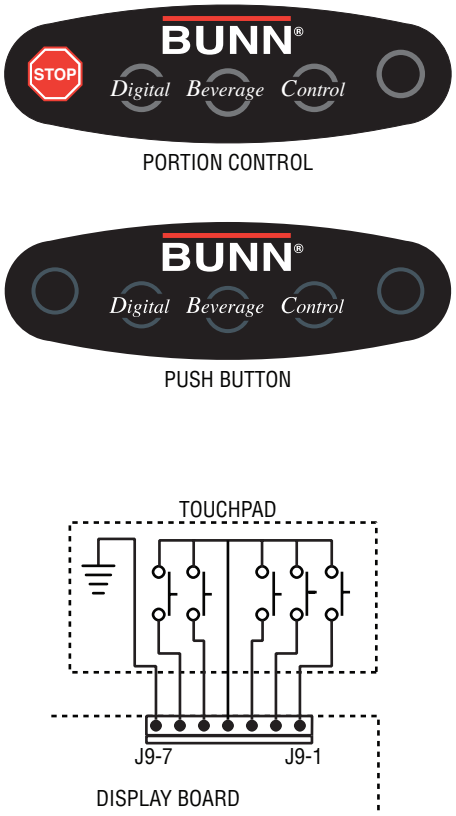

P1680

FIG. 16 TOUCHPAD CONNECTORS

SERVICE (cont.)

PROGRAMMING - CALIBRATION & DIAGNOSTICS

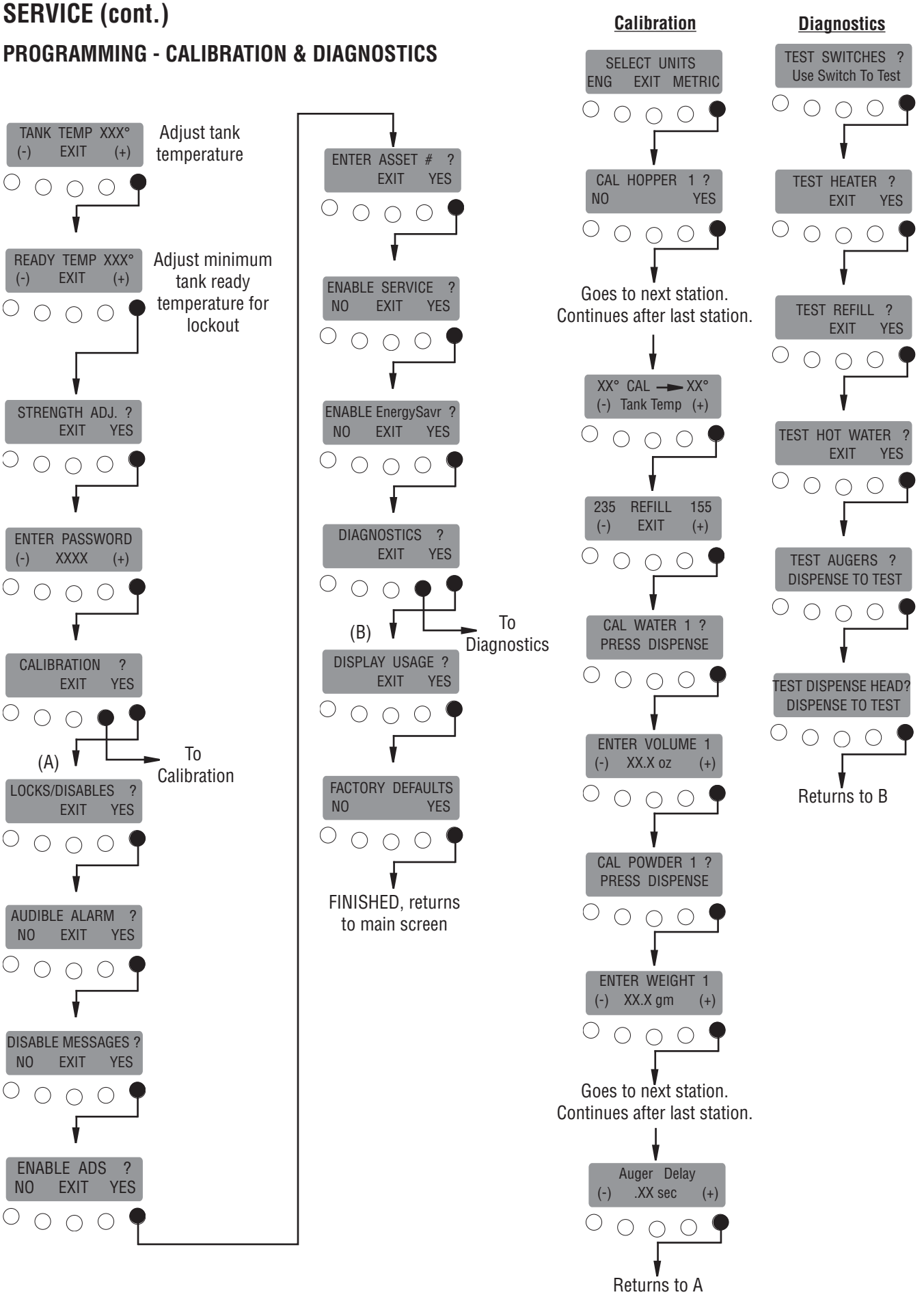

MEMORY CLOCK BOARD (Early Models) (IMIX-3, 4 & 5 only)

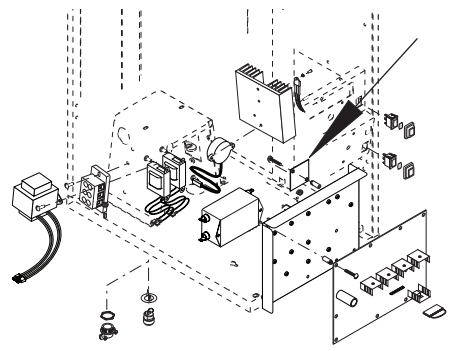

FIG. 17 MEMORY CLOCK BOARD

Location:

The Memory Clock Control Board is located on the back side of the component bracket assembly.

Test Procedure:

1. Disconnect the dispenser from the power source.
2. Disconnect the wiring harness on the memory board.
3. Check for 5VDC on J1-4 and J1-5.

If voltage is not present as described the memory board is operating properly.
If voltage is present as described, replace the memory board.

Removal and Replacement:

1. Disconnect the wiring harness from the memory board.
2. Remove the two #6-32 screws securing the memory board to the component bracket.
3. Remove the two spacers from the memory board.
4. Remove and discard memory board.
5. Install the two spacers to the new memory board.
6. Install new memory board using two #6-32 screws to secure board to the component bracket.
7. Refer to Fig. 18 when reconnecting the wires.

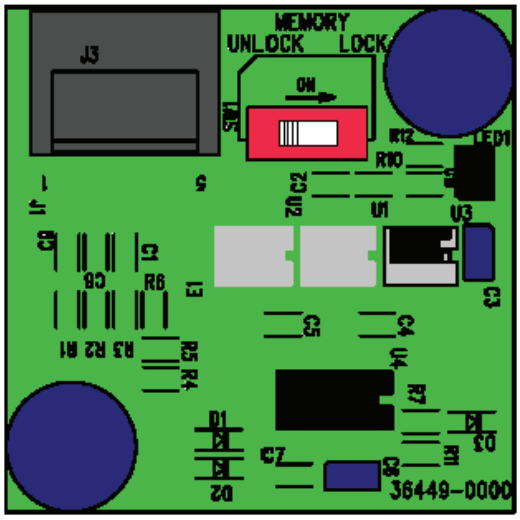

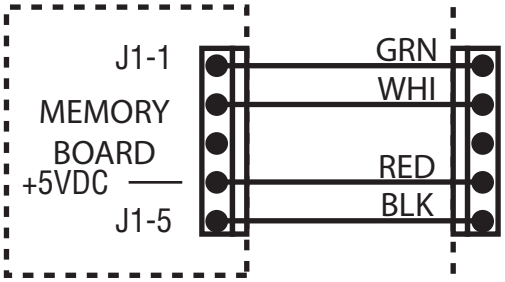

FIG. 18 MEMORY CLOCK BOARD CONNECTORS

TEMPERATURE PROBE

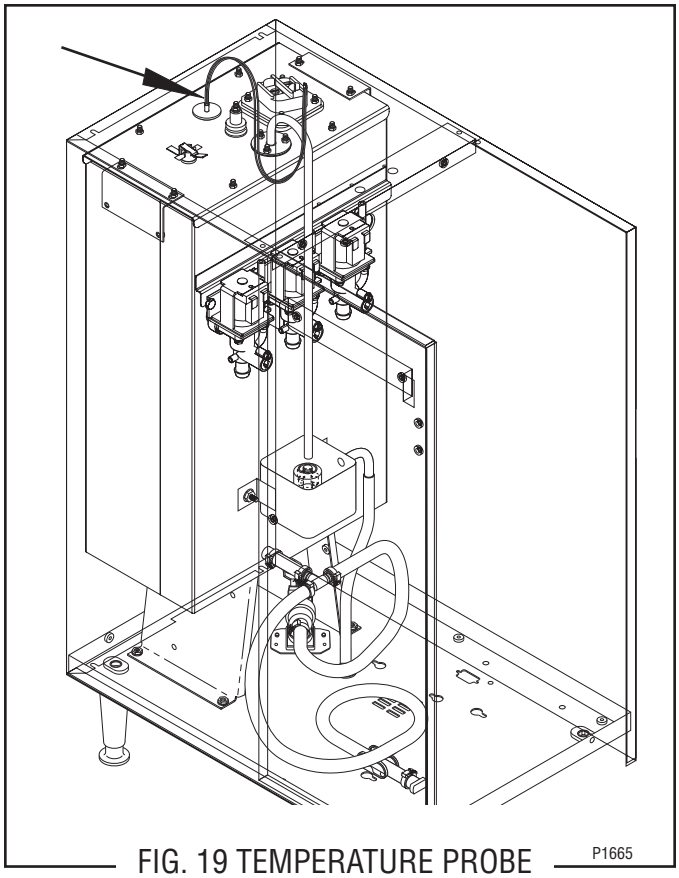

FIG. 19 TEMPERATURE PROBE

Location:

The temperature probe is located on the top of the tank assembly.

Test Procedure:

1. Disconnect the dispenser from the power source.
2. Remove the top rear cover.
3. With a voltmeter, back probe the connector from the temperature probe.
4. Connect the dispenser to the power source.
5. See the chart for voltage readings.
6. For continuity check, disconnect the dispenser from the power source.
7. Disconnct the two pin connector from the dispenser main wiring harness.
8. With an ohmmeter, check for continuity across the pins for the black and white wires.
9. See the chart for resistance readings.
10. Verify wiring to probe.
11. If readings are not present as described, replace the temperature probe.

NOTE: Some meters have difficulty measuring a sensor either rapidly rising or falling in temperature.

Removal and Replacement:

1. Disconnect the dispenser from the power source.
2. Remove the top rear cover.
3. Disconnct the two pin connector from the dispenser main wiring harness.
4. Remove the temperature probe by firmly pulling-up on the tube at the tank lid. This will disengage the grommet from the tank lid.
5. Slide a new grommet on to the new temperature probe.
6. Insert the temperature probe through the hole in the tank lid and press the grommet firmly and evenly so that the groove in the grommet fits into the tank lid.
7. Reconnect the two pin connector to the dispenser main wiring harness.

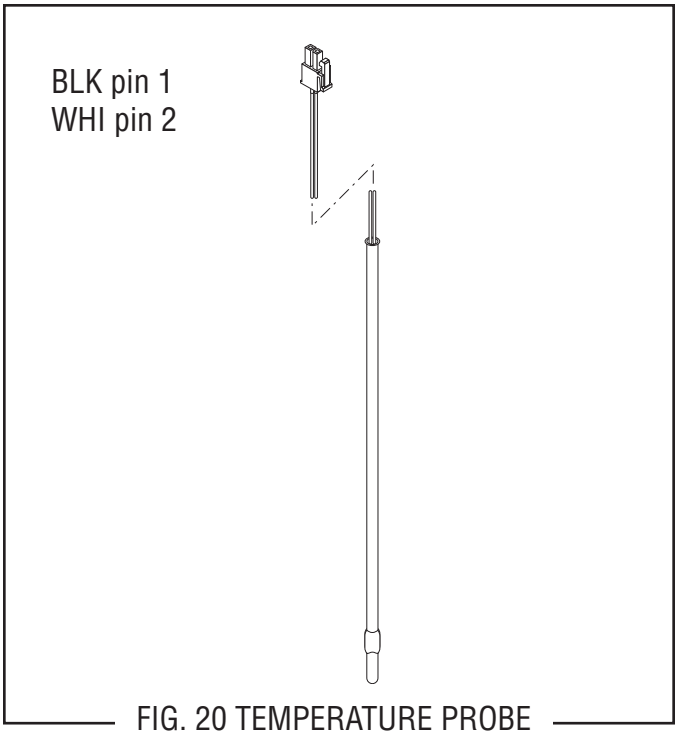

FIG. 20 TEMPERATURE PROBE

TEMP	RESISTANCE	VOLTAGE
READY 190° F 87.0° C	891 Ω	1.5VDC
ROOM 70° F 21.1° C	11.9k Ω	4.5VDC

SERVICE (cont.)

DISPENSE SWITCHES (IMIX-3S+ & 5S+ only)

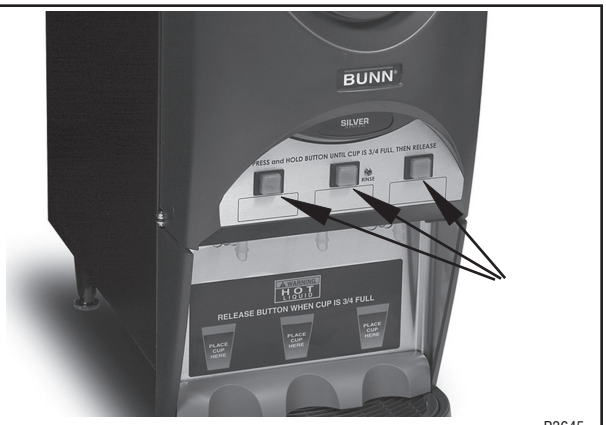

FIG.21 DISPENSE SWITCHES

Location:

The dispense switches are located on the lower outside of the dispenser door.

Test Procedure:

1. Disconnect the dispenser from the power source.
2. Open the dispenser door and remove the bottom door cover.
3. Disconnect the wires from the door interconnect wiring harness to the dispense switch to be tested.
4. Check for voltage across each pair of wires as indicated in Fig. 26. Connect the dispenser to the power supply. The indication must be:
   a) 120 volts ac for two wire 120 volt models, 120/208 volt and 120/240 volt models.
   b) 240 volts ac for two wire 240 volt models.
   c) 230 volts ac for two wire 230 volt models.
5. Disconnect the dispenser from the power source.

If voltage is present as described, proceed to #6.
If voltage is not present as described, refer to the Wiring Diagrams and check the dispenser wiring harness.

6. With a voltmeter, check the voltage across the blue/black (+) and orange (-) wires for the right dispense switch, black/white (+) and orange (-) wires for the center dispense switch, or blue/white (+) and orange (-) for the left dispense switch from the door interconnect wiring harness. Connect the dispenser to the power source. The indication must be +5 volts dc.

If voltage is present as described, proceed to #7.
If voltage is not present as described, refer to the Wiring Diagrams and check the dispenser wiring harness.

7. Check for continuity across the terminals (top right to top left; bottom right to bottom left) of the dispense switch with the switch in the “ON” position. Continuity must not be present when the switch is in the “OFF” (released) position.

If continuity is present as described, reconnect the connector to the door interconnect wiring harness, the switch is operating properly.
If continuity is not present as described, replace the switch.

Removal and Replacement:

1. Open the dispenser door.
2. Remove the bottom door cover.
3. Disconnect the wires on the dispense switch to be removed from the door interconnect wiring harness.
4. Compress the clips inside the door on the dispense switch and gently push the switch through the opening.
5. Push new switch into the opening and spread the clips to hold the switch in the door.
6. Reconnect the wires to the dispense switch from door interconnect wiring harness.
7. Reinstall the bottom door bottom.
8. Refer to Fig. 22 when reinstalling wires.

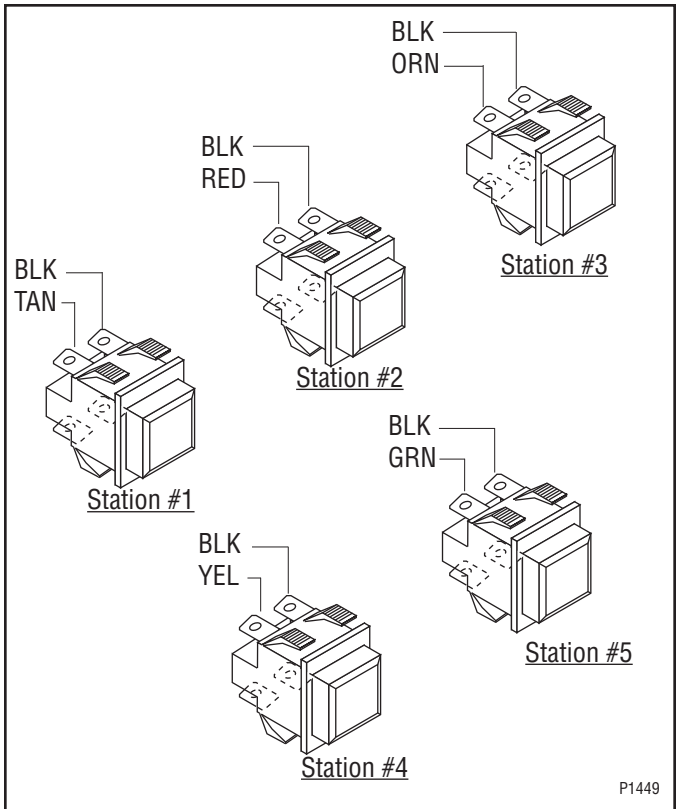

FIG. 22 DISPENSE SWITCH TERMINALS

DISPENSE SWITCHES

FIG.23 DISPENSE SWITCHES

Location:

The dispense buttons are located on the lower outside of the dispenser door and actuate switches on the dispense switch board located on the inside of the door.

Test Procedure:

Enter Programming and Test Switches.

Removal and Replacement:

1. Disconnect the dispenser from the power source.
2. Open the dispenser door.
3. Remove the four #8-32 screws securing the lower door panel and remove the panel.
4. Disconnect the five pin harness from the switch board.
5. Remove the four #6 screws securing the switch board to the door frame and discard the board.
6. Other parts of the switch assembly may be removed if necessary.
7. Install the new switch board using the four #6 screws.
8. Connect the five pin harness to the switch board.
9. Install the lower door panel using the four #8-32 screws.

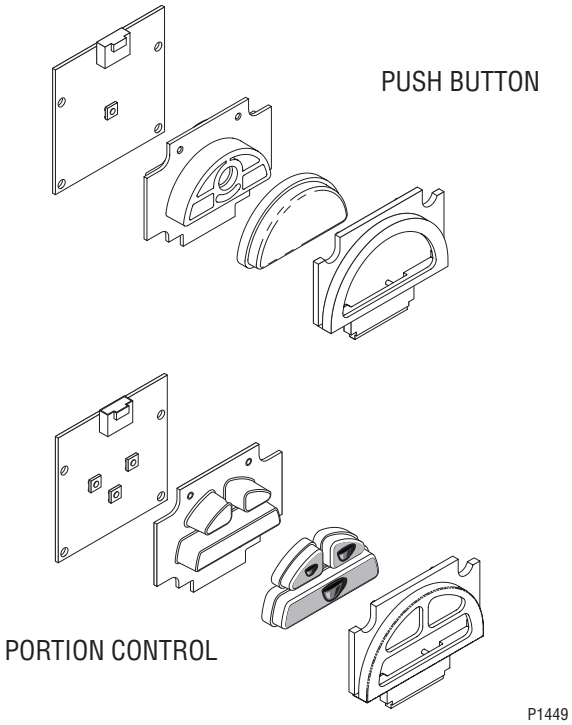

FIG. 24 DISPENSE SWITCH BOARD

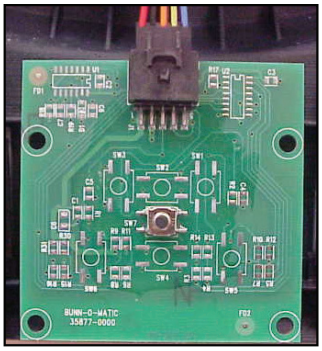

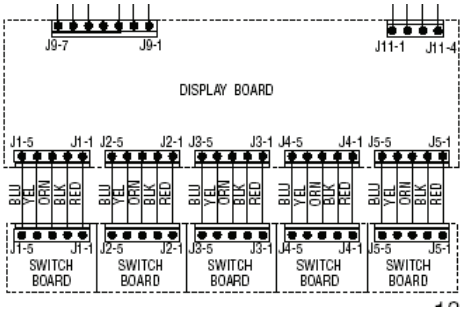

SERVICE (cont.)

EMI FILTER (230 Volt IMIX-3, 4 & 5 only)

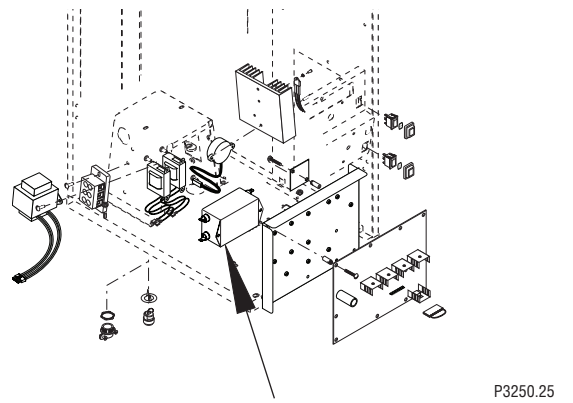

FIG. 25 EMI FILTER

Location:

The EMI Filter is located on the rear of the dispenser base near the Terminal Block on IMIX-3.

The EMI Filter is located on the rear of the back side of the component bracket assembly on IMIX-4 & 5.

Test Procedure:

1. Disconnect the dispenser from the power source.
2. Disconnect the two black wires and two white wires on the EMI Filter from the EMI Filter wiring harness.
3. Check for resistance between the two black leads on the EMI Filter.

If resistance is present as described the EMI Filter is operating properly.
If resistance is not present as described, replace the EMI Filter.

Removal and Replacement:

1. Disconnect the wires from the EMI Filter.
2. Remove the two #8-32 screws and nuts securing the EMI Filter.
3. Remove and discard EMI Filter.
4. Install new EMI Filter using two #8-32 screws and nuts to secure EMI Filter to its former location.
5. Refer to Fig. 26 when reconnecting the wires.

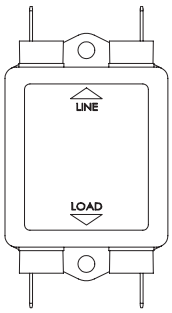

118.0 kΩ - 118.5 kΩ
Across either pair

FIG. 26 EMI FILTER CONNECTORS

SERVICE (cont.)

VACUUM FAN

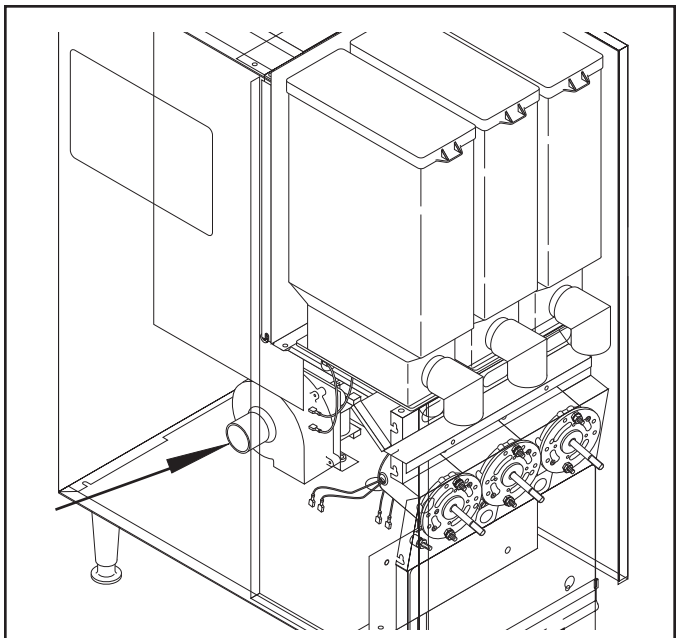

FIG. 27 FAN P1436

Location:

The fan is located inside the dispenser housing on the right rear of the dispenser base plate.

Test Procedures:

1. Disconnect the dispenser from the power source.
2. Disconnect the black and white wires from the fan terminals.
3. With a voltmeter, check the voltage across the black and white wires. Connect the dispenser to the power source. The indication must be:
   a) 120 volts ac for two wire 120 volt, three wire 120/208 volt and 120/240 volt models.
   b) 240 volts ac for two wire 240 volt models.
   c) 230 volts ac for two wire 230 volt models.

If voltage is present as described, replace the fan.
If voltage is not present as described, refer to Wiring Diagrams and check the dispenser wiring harness.

Removal and Replacement:

1. Disconnect the vacuum hose from the fan.
2. Remove the two #8-32 locking screws securing the fan to the dispenser housing base plate.
3. Disconnect the wires from the fan terminals and discard the fan
4. Refer to Fig. 28 and connect the wires to the new fan.
5. Install new fan using two #8-32 locking screws.
6. Reconnect the vacuum hose to the fan.

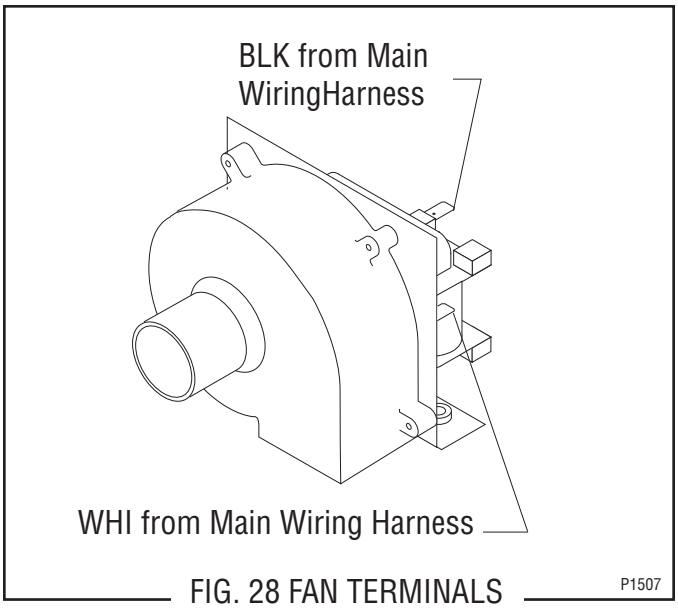

FIG. 28 FAN TERMINALS P1507

FROTHER AND WHIPPER MOTOR

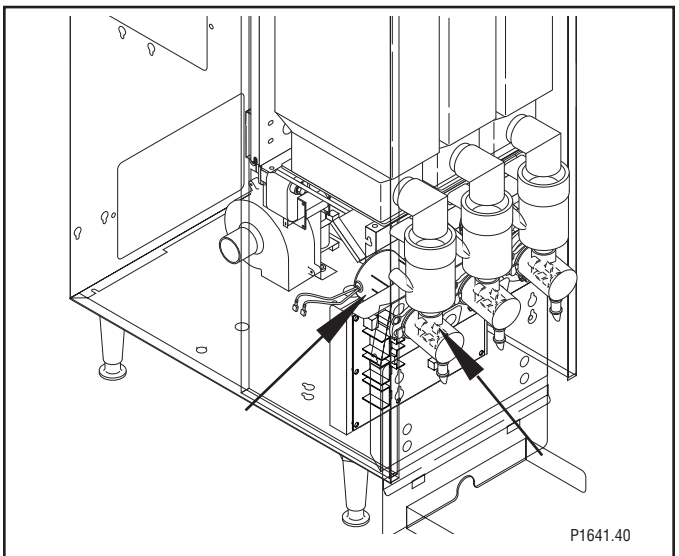

FIG. 29 FROTHER AND WHIPPER MOTOR

Location:

The frothers are located behind the dispenser door, mounted on the whipper motor shaft inside the whipper chamber.

The whipper motors are located on the back side of the whipper motor mounting panel.

Test Procedure:

1. Check that the rinse/run switch is in the rinse (up) position.
2. Disconnect the dispenser from the power source.
3. Disconnect both wires from the black leads on the motor to be checked.
4. Press and hold the appropriate dispense switch and, with a voltmeter, check the voltage across the disconnected harness. Connect the dispenser to the power source. The reading must be:
   a) 120 volts ac for two wire 120 volt models, three wire 120/208 volt and 120/240 volt models.
   b) 240 volts ac for two wire 240 volt models.
   c) 230 volts ac for two wire 230 volt models.
5. Disconnect the dispenser from the power source.

If voltage is present as described, replace the motor. If voltage is not present as described, refer to the Wiring Diagrams and check the dispenser wiring harness

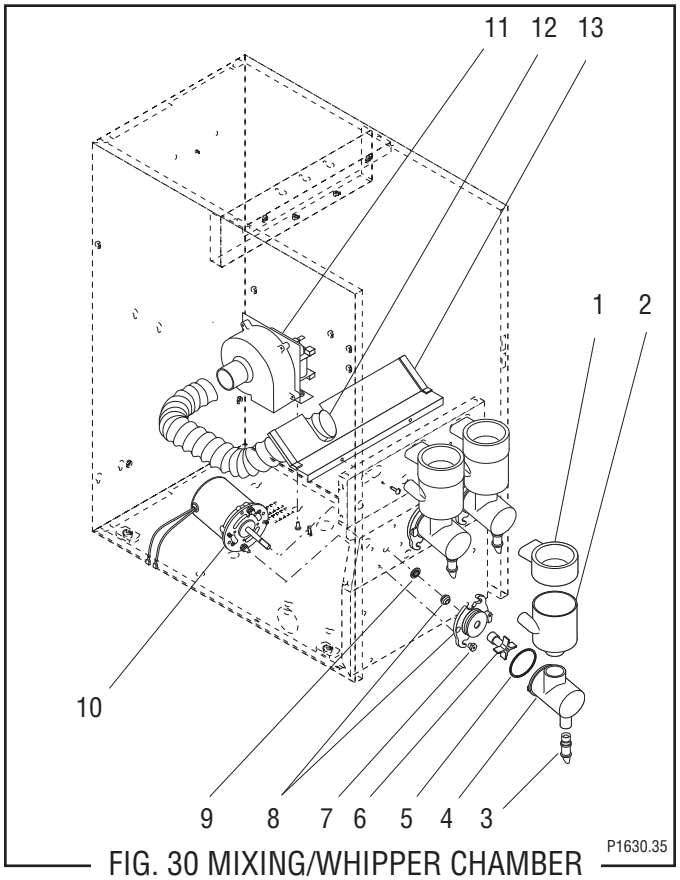

FIG. 30 MIXING/WHIPPER CHAMBER COMPONENTS

1. Steam Collector
2. Mixing Chamber
3. Dispense Tip
4. Whipper Chamber
5. O-Ring
6. Frother
7. Nut
8. Receptacle w/Seal
9. Slinger
10. Motor Assy.
11. Fan
12. Vacuum Hose
13. Baffle

Removal, Cleaning & Replacement (Refer to Fig. 30):

1. Disconnect the dispenser from power.
2. Open the dispenser door and turn elbows up.
3. Remove the steam collectors (1) by pulling forward and at the same time twisting clockwise.
4. Pull the mixing chamber (2) out of the whipper chamber (4).
5. Remove dispense tip (3) and twist the whipper chamber (4) clockwise and pull it off the whipper chamber receptacle (8).

FROTHER AND WHIPPER MOTOR (cont.)

6. Pull the frother (6) off the motor shaft. Notice the flat side on the shaft and the matching flat inside the frother. It is important that these two flats are lined up when reassembling.
7. Slip the o-ring (5) off the whipper chamber receptacle (8).
8. Remove nearest side panel and disconnect whipper motor wires.
9. Remove the two nuts (7) securing whipper chamber receptacle (8) and whipper motor (10) to the front panel.

NOTE: To remove the recptacle only, rotate clockwise until the receptacle clears the nuts (7) and slides off of the motor shaft.

10. Slide the receptacle with seal off of the motor shaft.
11. Slide the slinger (9) off of the motor shaft.
12. Remove motor and discard.
13. Install new motor (10) on rear of front panel and secure with two nuts (7) and connect black leads on the motor to the main wiring harness. Refer to Fig. 27 when reconnecting wires
14. Slide slinger (9) onto the motor shaft flush against the front panel.
15. Wash remaining components in a mild solution of dish detergent using a bristle brush.
16. Rinse thoroughly and allow to dry before reinstalling in the dispenser.
17. Slide whipper chamber receptacle with seal (8) and o-ring (5) on to the motor shaft.
18 Rotate the receptacle with seal (8) counterclockwise until it snaps into place on the motor mounting nuts (7).
19. Push frother (6) onto the motor shaft, making sure the flat in the frother (6) lines up with the flat on the motor shaft.
20. Install whipper chamber (4) on the whipper chamber receptacle (8) by twisting counterclockwise until the tabs on the whipper chamber (4) lock with the tabs on the whipper chamber receptacle (8). Be sure dispense port is pointing down.
21. Install dispense tip (3) into the bottom of the whipper chamber (4).
22. Slip the mixing chamber (2) onto the mixing chamber water inlet tube far enough so the mixing chamber (2) will seat inside the whipper chamber (4).
23. Install the steam collector (1) onto the mixing chamber (2) by pushing down and toward the dispenser while twisting until the flange on the steam collector lines up with the slot in the front panel.
24. Install hopper assembly in the dispenser by sliding hopper assembly on the hopper support panel until the slot in the bottom rear of the hopper seats against the shoulder screw in the hopper support panel.
25. Reinstall side panel.
26. Reconnect to power and test.

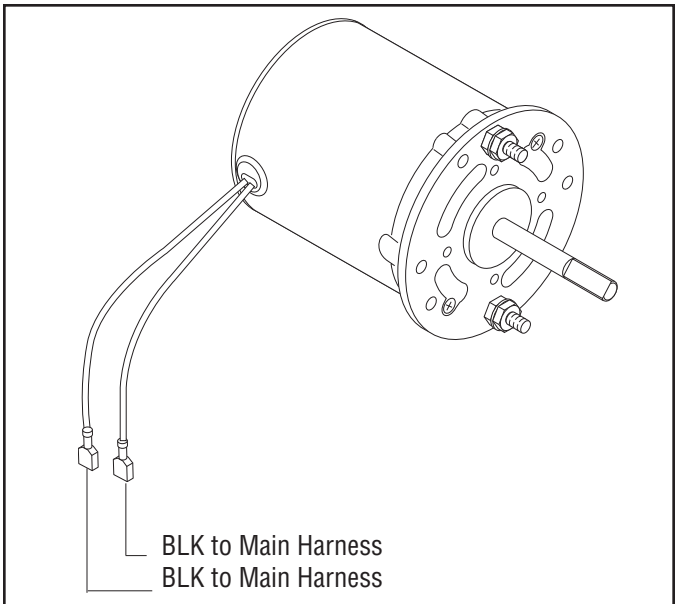

FIG.31 WHIPPER MOTOR TERMINALS P1451.40

SERVICE (cont.)

LAMP AND LAMP HOLDER

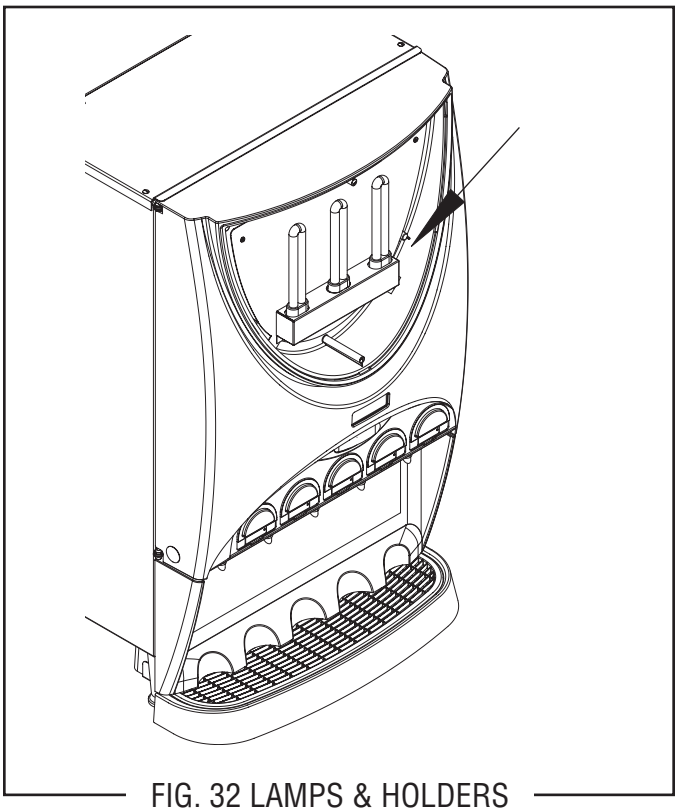

FIG. 32 LAMPS & HOLDERS

Location:

The lamps and lamp holders are located on the front of the upper panel behind the display panel.

Test Procedure:

1. Disconnect the dispenser from the power source.
2. Remove the outside window and display graphic.
3. Remove the two #4-40 screws securing the inside window to the door and remove window.
3. Pull the lamp upwards and remove from the lamp holders.
4. Remove lamp from lamp holders.
5. Remove the two lower screws attaching the lamp holder bracket and remove the bracket.
6. Check for continuity on each lead of the lamp holders.

If continuity is present as described, lamp holders are operating properly.
If continuity is not present as described replace the lamp holder.

Removal and Replacement:

1. Disconnect the dispenser from the power source.
2. Remove the outside window and display graphic.
3. Remove the two #4-40 screws securing the inside window to the door and remove window.
4. Pull the lamp upwards and remove from the lamp holders.
5. Remove lamp from lamp holders.
6. Remove the two lower screws attaching the lamp holder bracket and remove the bracket.
7. Disconnect the lamp holder from the lamp panel.
8. Disconnect the wiring harness from the lamp holder to be replaced and discard.
9. Connect the wiring harness to the new lamp holder and snap the holder into place on the lamp panel.
10. Install the lamp holder bracket using screws previously removed.
11. Install the lamp by pressing into the lamp holder.
12. Install inside window using two #4-40 screws.
13. Install the graphic display and outside window.

LAMP REPLACEMENT (Refer to Fig. 33)

1. Disconnect the dispenser from the power source.
2. Remove the outside window and display graphic.
3. Remove the two #4-40 screws securing the inside window to the door and remove window.
3. Pull the lamp upwards and remove from the lamp holders.
4. Install the lamp by pressing into the lamp holder.
5. Install inside window using two #4-40 screws.
6. Install the graphic display and outside window.

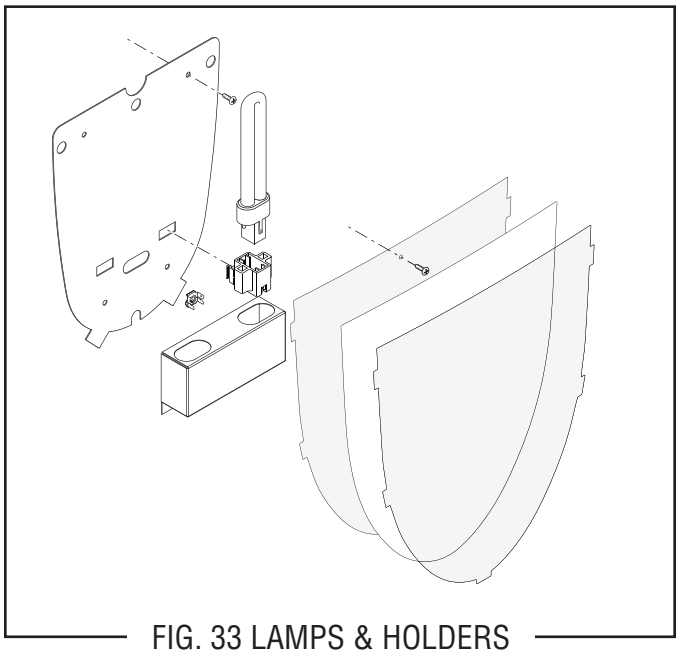

FIG. 33 LAMPS & HOLDERS

LED LIGHTED DOORS

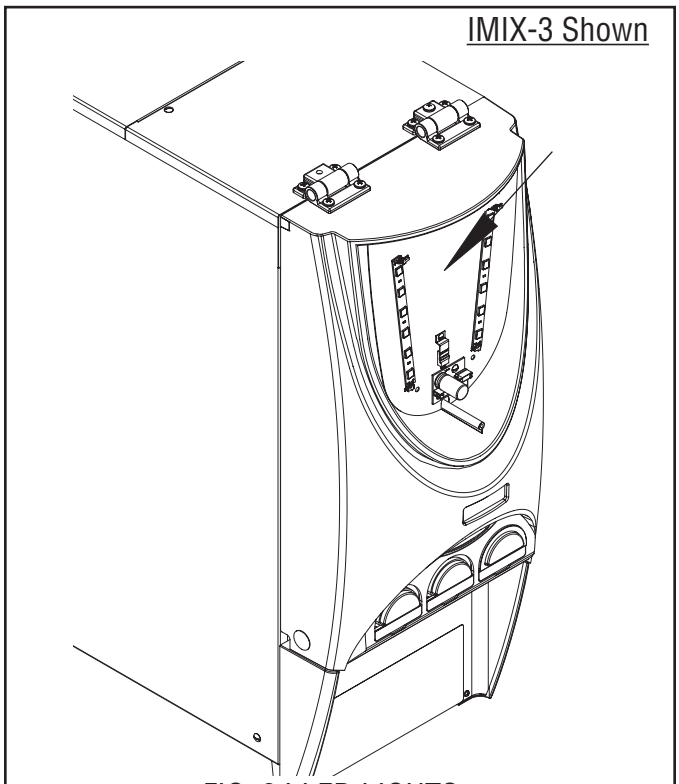

FIG. 34 LED LIGHTS

Location:

The LED hopper lights are located on the front of the upper panel behind the display panel.

Test Procedures:

1. Disconnect power from the dispenser.
2. Disconnect the black and red leads from the LEDs.
3. Check the voltage across the two leads with a voltmeter. Reconnect power to the dispenser. The indication must be approximately 12 volts ac.
4. Disconnect power from the dispenser.

If voltage is present as described, the LED board is faulty.
If voltage is not present as described, retrace the wiring circuit to find the fault.

5. Check for continuity across the terminals on the leads and the LED harness.

If continuity is present as described, the lamp is operating properly.
If continuity is not present as described, replace the lamp.

Removal and Replacement:

1. Disconnect power from the dispenser.
2. Remove the outside window and display graphic.
3. Remove the two #4-40 screws securing the inside window to the door and remove window.
4. Remove the LED circuit board assembly from the door panel.
5. Replace the LED circuit board assembly by exposing the adhesive backing.

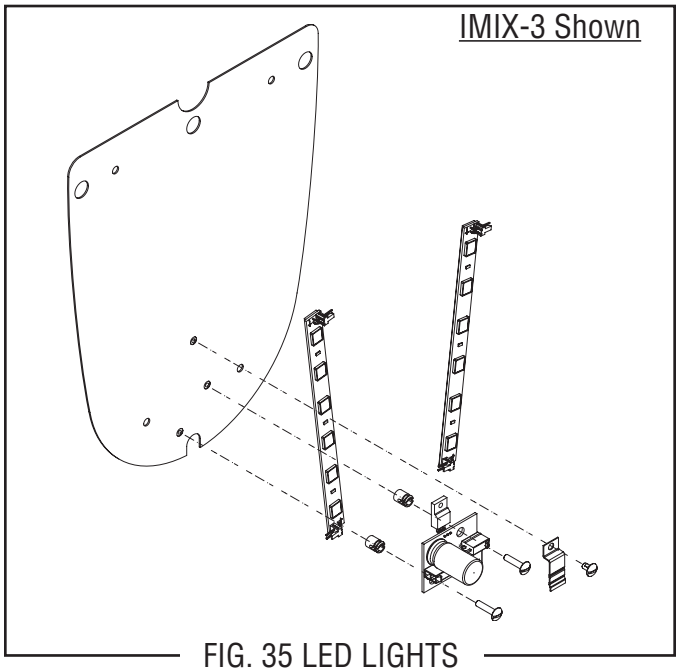

FIG. 35 LED LIGHTS

LIMIT THERMOSTAT

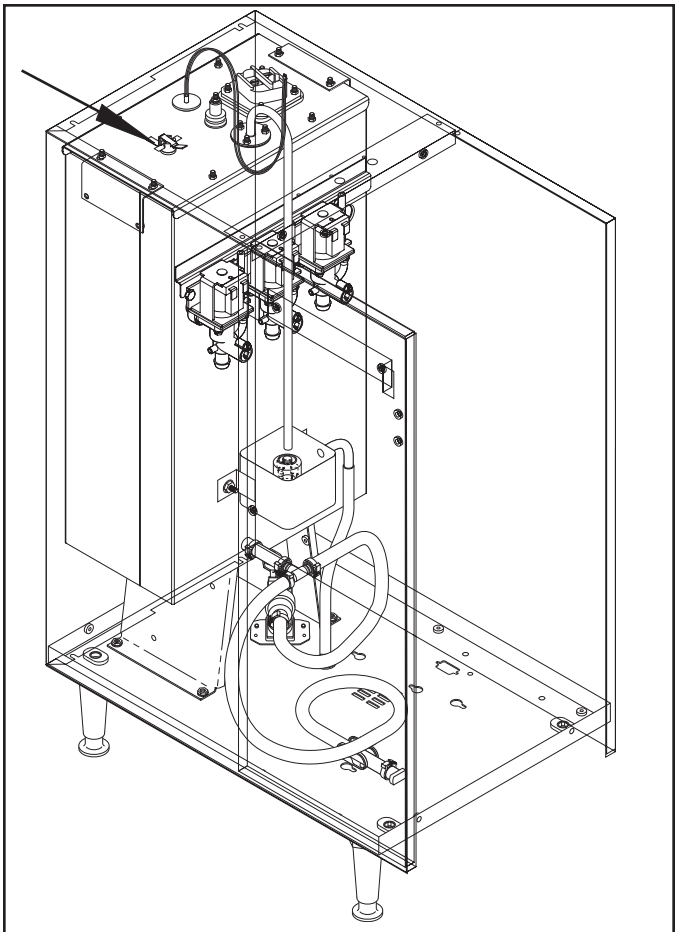

FIG. 36 LIMIT THERMOSTAT P1637

Location:

The limit thermostat is located in the center of the tank lid.

Test Procedures:

1. Disconnect the dispenser from the power source.
2. Disconnect both black wires from the limit thermostat.
3. Check for continuity across the limit thermostat terminals.

If continuity is present as described, the limit thermostat is operating properly.

If continuity is not present as described, replace the limit thermostat.

Removal and Replacement:

1. Remove all wires from the limit thermostat terminals.
2. Carefully slide the limit thermostat out from under the retaining clip and remove the limit thermostat.
3. Carefully slide the new limit thermostat into the retaining clip.
4. Refer to schematic wiring diagrams when reconnecting the wires.

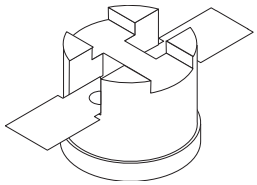

FIG. 37 LIMIT THERMOSTAT TERMINALS P1800

ON/OFF/NIGHT SWITCH

FIG. 38 ON/OFF/NIGHT SWITCH

Location:

The ON/OFF/NIGHT Switch is located inside the dispenser door on the lower right side of the whipper panel.

Test Procedures:

1. Disconnect the dispenser from the power source.
2. Disconnect the wires from the switch terminals.
3. Check for continuity between the center terminal and upper terminal with switch in the NIGHT (lower) position. Check for continuity between the center terminal and the lower terminal with the switch in the ON (upper) position. Continuity must not be present when the switch is in the OFF (center) position.

If continuity is present as described, the switch is operating properly.
If continuity is not present as described, replace the switch.

Removal and Replacement:

1. Remove all wires from the switch terminals.
2. Compress the clipson the switch and gently push the switch through the opening in the panel.
3. Push the new switch into the opening of the panel so that the clips snap it securely into place.
4. Refer to Fig. 39 when reconnecting the wires.

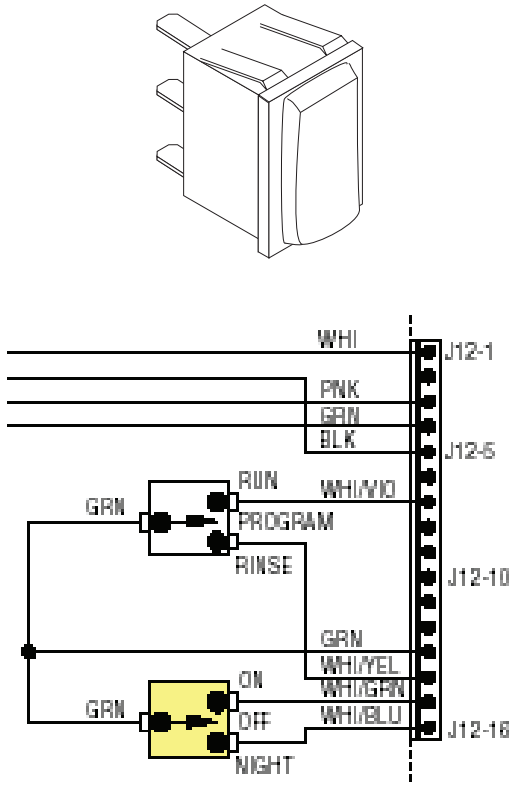

FIG. 39 ON/OFF/NIGHT SWITCH TERMINALS

NORMAL/PROGRAM/RINSE SWITCH

FIG. 40 NORMAL/PROGRAM/RINSE SWITCH

Location:

The NORMAL/PROGRAM/RINSE Switch is located inside the dispenser door on the upper right side of the whipper panel.

Test Procedures:

1. Disconnect the dispenser from the power source.
2. Disconnect the wires from the switch terminals.
3. Check for continuity between the center terminal and upper terminal with switch in the RINSE (lower) position. Check for continuity between the center terminal and the lower terminal with the switch in the NORMAL (upper) position. Continuity must not be present when the switch is in the PROGRAM (center) position.

If continuity is present as described, the switch is operating properly.
If continuity is not present as described, replace the switch.

Removal and Replacement:

1. Remove all wires from the switch terminals.
2. Compress the clipson the switch and gently push the switch through the opening in the panel.
3. Push the new switch into the opening of the panel so that the clips snap it securely into place.
4. Refer to Fig. 41 when reconnecting the wires.

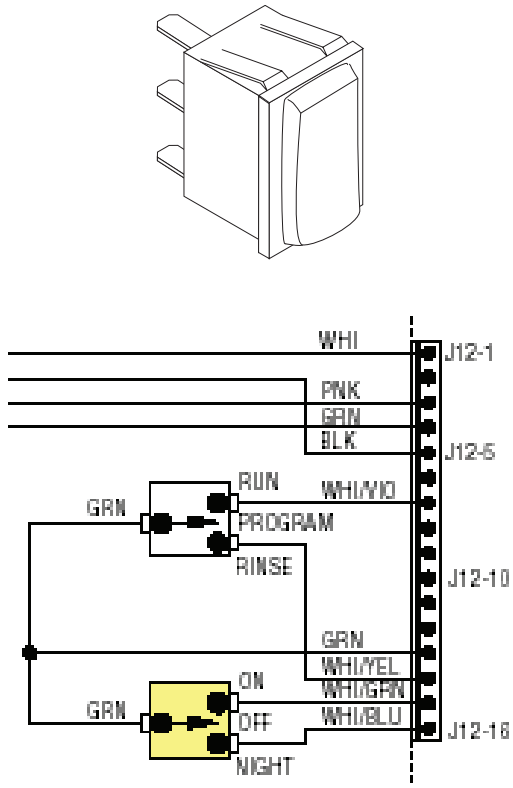

FIG. 41 NORMAL/PROGRAM/RINSE SWITCH TERMINALS

OVERFLOW PROTECTION SWITCH

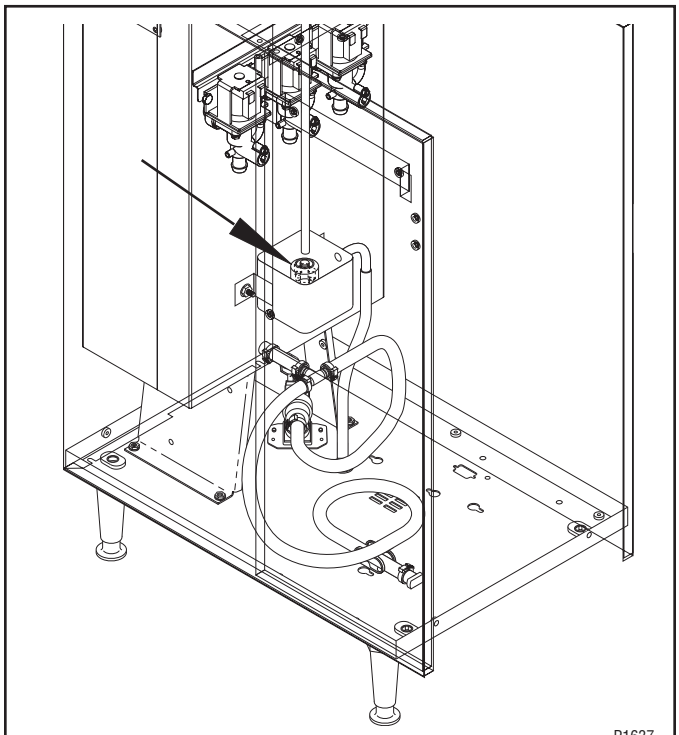

FIG. 42 OVERFLOW PROTECTION SWITCH

Location:

The overflow protection switch is located inside the copper overflow cup on the left side of the tank.

Test Procedures:

1. Disconnect the dispenser from the power source.
2. Remove the wire nuts connecting the red wires from the overflow protection switch to the black wire and blue wire from the main harness.
3. Check for continuity across the safety overflow switch red wires only until the plastic float is raised and check that continuity returns when the plastic float is again lowered.

If continuity is present as described, reconnect the red wires to the black wire and the blue wire from the main harness.
If continuity is not present as described, replace the overflow protection switch.

Removal and Replacement:

1. Disconnect the red leads from the overflow protection switch from the black wire and the blue wire from the main harness.
2. Remove the nut beneath the copper overflow cup.
3. Remove the entire switch assembly from the cup.
4. Place the new switch assembly into the cup, wires first. Make sure that a gasket is in place around the threaded switch stem.

NOTE - The magnets must be at the top of float and there must be NO adjusting washers installed for the overflow protection switch to operate properly.

5. Install the nut beneath the copper overflow cup. Be sure not to overtighten.
6. Refer to schematic wiring diagrams when reconnecting wires.

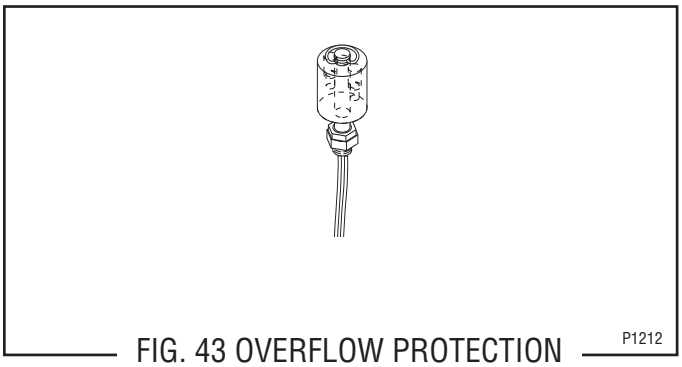

FIG. 43 OVERFLOW PROTECTION SWITCH LEADS

SOLENOID VALVE (INLET)

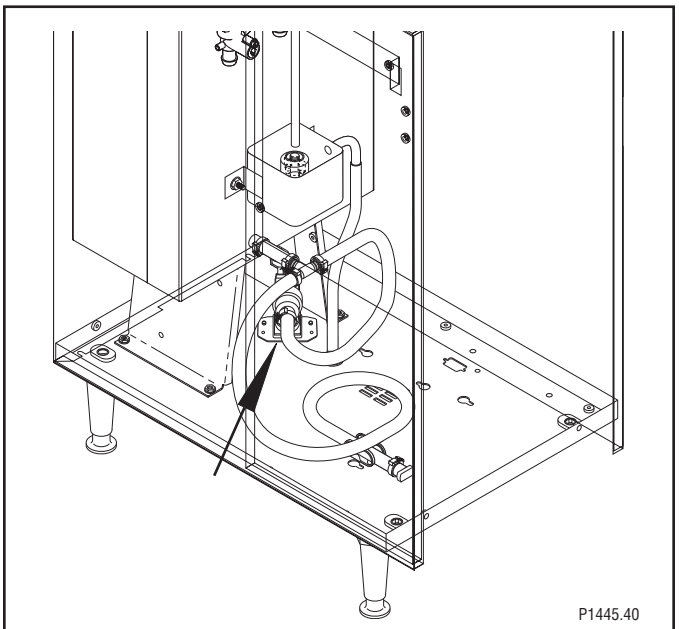

FIG. 44 INLET SOLENOID VALVE

Location:

The inlet solenoid is located inside on the rear of the dispenser base.

Test Procedures:

1. Disconnect the dispenser from the power source.
2. Disconnect the two wires from the solenoid valve.
3. Check for continuity across the solenoid valve coil terminals.

If continuity is present as described, reconnect the two wires to the solenoid.
If continuity is not present as described, replace the solenoid valve.

4. Check the solenoid valve for coil action. Connect the dispenser to the power source. Listen carefully in the vicinity of the solenoid valve for a “clicking” sound as the coil magnet attracts.
5. Disconnect the dispenser from the power source.

If the sound is heard as described and water will not pass through the solenoid valve, there may be a blockage in the water line before the solenoid valve or, the solenoid valve may require inspection for wear, and removal of waterborne particles.
If the sound is not heard as described, replace the solenoid valve.

Removal and Replacement:

1. Remove the two wires from the solenoid valve.
2. Turn off the water supply to the dispenser.
3. Disconnect the water lines to and from the solenoid valve.
4. Remove the two #8-32 screws securing the solenoid to the dispenser base. Remove solenoid.
5. Install new solenoid valve on the dispenser base and secure with the two #8-32 screws.
6. Securely fasten the water lines to and from the solenoid valve.
7. Refer to Schematic Wiring Diagrams when reconnecting the wires.

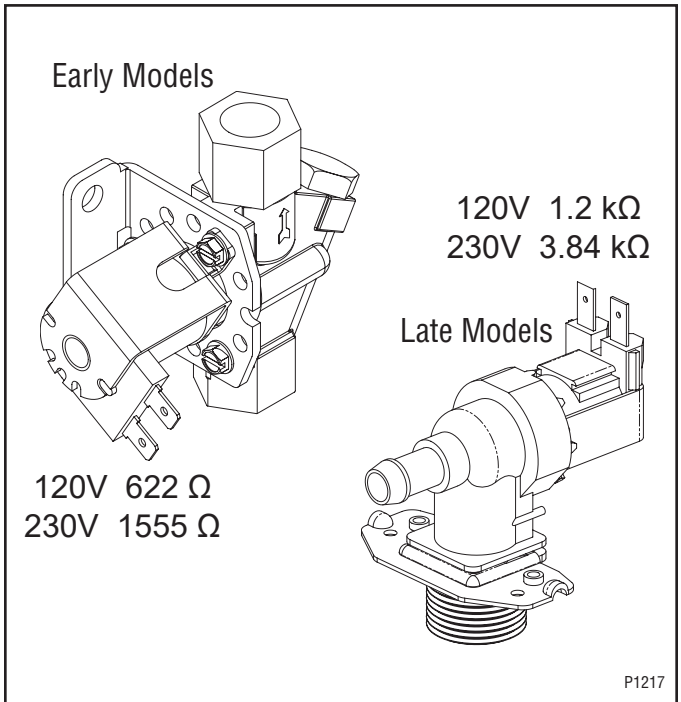

FIG. 45 INLET SOLENOID VALVE TERMINALS

SERVICE (cont.)

SOLENOID VALVES (DISPENSE)

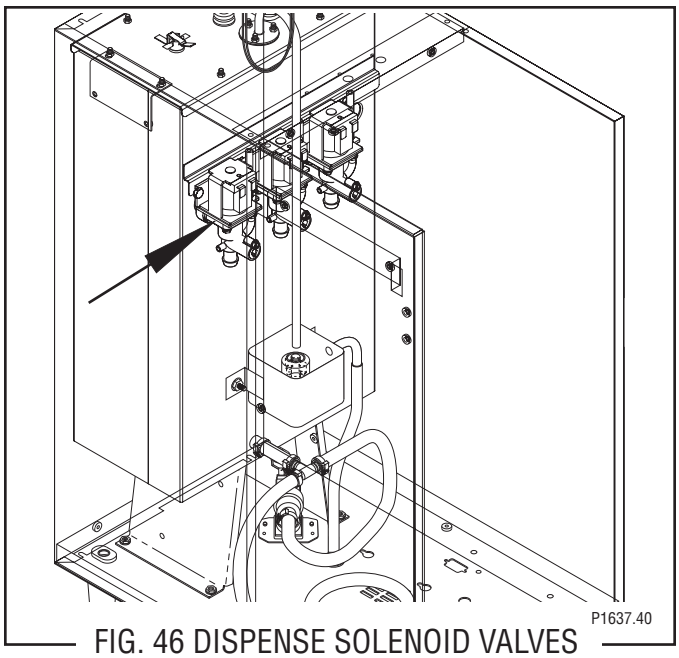

FIG. 46 DISPENSE SOLENOID VALVES

Location:

The dispense solenoids are located on the side of the tank.

Test Procedures:

1. Disconnect the dispenser from the power source.
2. Disconnect the two wires from the solenoid valve. With the "RUN/RINSE" switch in the "RINSE" (upper) position press the appropriate dispense switch on front of the door.
3. With a voltmeter, check the voltage across the two wires. Connect the dispenser to the power source. The indication must be:
   a) 120 volts ac for two wire 120 volt models, three wire 120/208 volt, and 120/240 volt models.
   b) 240 volts ac for two wire 240 volt models.
   c) 230 volts ac for two wire 230 volt models.
4. Disconnect the dispenser from the power source,

If voltage is present as described, proceed to #5

If voltage is not present as described, refer to Wiring Diagrams and check dispenser wiring harness.

5. Check for continuity across the solenoid valve coil terminals.

If continuity is present as described, reconnect the two wires to the solenoid.

If continuity is not present as described, replace the solenoid valve.

6. Check the solenoid valve for coil action. Connect the dispenser to the power source. With "RUN/RINSE" switch in the "RINSE" (upper) position press the appropriate dispense switch and listen carefully in the vicinity of the solenoid valve for a "clicking" sound as the coil magnet attracts.
7. Disconnect the dispenser from the power source.

If the sound is heard as described and water will not pass through the solenoid valve, there may be a blockage in the tank water outlet before the solenoid valve or, the solenoid valve may require inspection for wear, and removal of waterborne particles.

If the sound is not heard as described, replace the solenoid valve.

Removal and Replacement:

1. Remove the two wires from the solenoid valve.
2. Turn off the water supply to the dispenser.
3. Drain enough water from the tank (approximately 1.0 gallon) so the water level is below the dispense valve mounting hole.
4. Disconnect the water line from the solenoid valve.
5. Remove the #10-32 screw securing the solenoid valve to side of the tank. Remove solenoid valve.
6. Using the #10-32 screw install new solenoid valve on side of the tank
7. Push the water line onto the tube on bottom of solenoid valve.
8. Refer to schematic wiring diagrams when reconnecting the wires.

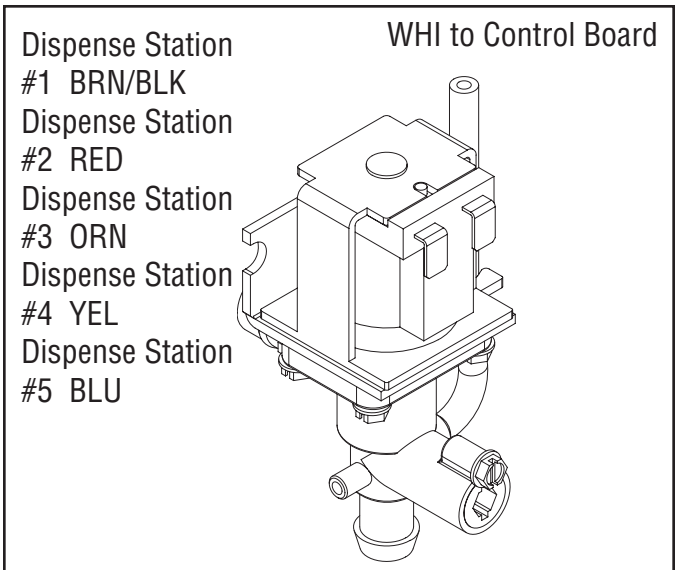

FIG. 47 DISPENSE SOLENOID VALVE TERMINALS

SERVICE (cont.)

TANK HEATER

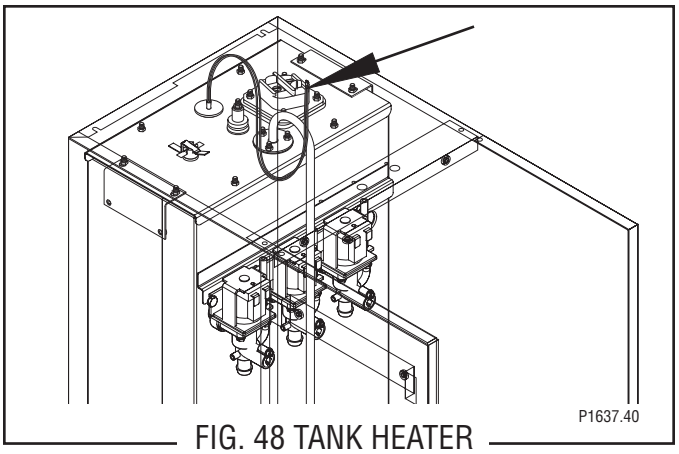

FIG. 48 TANK HEATER

Location:

The tank heater is located inside the tank and secured to the tank lid.

Test Procedure:

1. Disconnect the dispenser from the power source.
2. With a voltmeter, check the voltage across the black and white wires 120 volt or 240 volt models or black and red wires for 120/208 volt models or 120/240 volt models. Connect the dispenser to the power source. The indication must be:
   a) 120 volts ac for two wire 120 volt models;
   b) 208 volts ac for three wire 120/208 volt models.
   c) 240 volts ac for three wire 120/240 volt models and two wire 240 volt models.
   d) 230 volts ac for two wire 230 volt models.
3. Disconnect the dispenser from the power source

If voltage is present as described, proceed to #4.

If voltage is not present as described, refer to the dispenser Wiring Diagrams and check the wiring harness.

4. Disconnect the black wire and the white or red wire from the tank heater terminals.
5. Check for continuity across the tank heater terminals.

If continuity is present as described, reconnect the wires, the tank heater is operating properly.

If continuity is not present as described, replace the tank heater.

NOTE - If the tank heater remains unable to heat, remove and inspect heater for cracks in the sheath.

Removal and Replacement:

1. Shut off water supply to the dispenser.
2. Disconnect the water supply tube on the tank lid.
3. Disconnect the black wires on the limit thermostat.
4. Disconnect the black wire and the white or red wire from the tank heater terminals.
5. Disconnect the pink wire from the liquid level probe.
6. Disconnect the green wire from the tank.
7. Remove the thermostat capillary bulb/temperature probe by firmly pulling up on the capillary at the tank lid. This will disengage the grommet from the tank lid.
8. Remove the ten #8-32 nuts securing the tank lid to the tank.
9. Remove tank lid with limit thermostat, liquid level probe and tank heater as an assembly.
10. Remove the two hex nuts securing the tank heater to the tank lid. Remove tank heater with gaskets and discard.
11. Install new tank heater with gaskets on the tank lid and secure with two hex nuts.
12. Install tank lid with limit thermostat, liquid level probe and tank heater on the tank and secure with ten #8-32 hex nuts.
13. Connect water inlet line to the tank lid.
14. Reconnect the black wires to limit thermostat, the pink wire to the liquid level probe and the green wire to the tank. Refer to the limit thermostat and the liquid level board and probe sections in this manual when reconnecting wires.
15. Refer to Fig. 49 when reconnecting the wires to the tank heater.

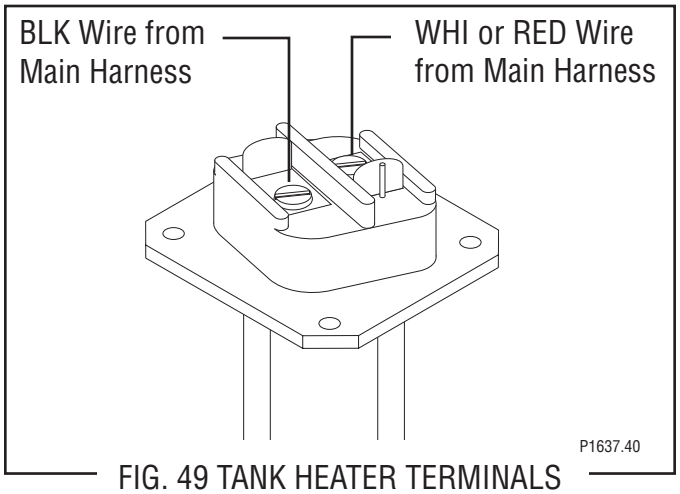

FIG. 49 TANK HEATER TERMINALS

TRANSFORMER

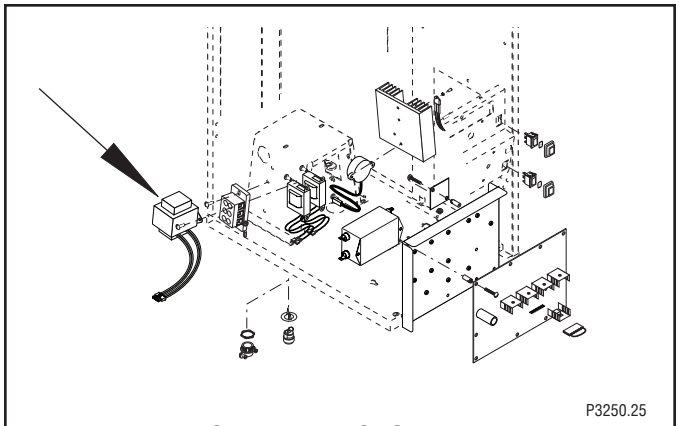

FIG. 50 TRANSFORMER

Location:

The transformer is mounted on the side of the tank mounting bracket for models 3,4 & 5. The transformer is located behind the lower front access cover, mounted on the rear side of the component bracket for models 3S,3S+,5S & 5S+.

Test Procedure:

1. Disconnect the dispenser from the power source.
2. Disconnect the four pin plug from the main harness from the four pin connector on the transformer.
3 Check the voltage across black wire pin 1 and the white wire pin 2 on the plug from the main harness. Connect the dispenser to power source. The indication must be:
   a) 120 volts ac for two wire 120 volt models, three wire 120/208 volt and three wire 120/240 volt models.
   b) 240 volts ac for two wire 240 volt models.
   c) 230 volts ac for two wire 230 volt models.
4. Disconnect the dispenser from the power source.

If voltage is present as described reconnect the plug and the connector and proceed to #5.
If voltage is not present as described, refer to the Wiring Diagrams and check the main wiring harness.

5. Check the voltage between J2-4 and J2-5 on the pin connector at the control board. Connect the dispenser to the power source. The indication must be 24 volts ac.

If voltage is present as described the transformer is operating properly.
If voltage is not present as described, replace the transformer.

Removal and Replacement:

1. Loosen the two #8-32 screws securing the component bracket to the dispenser housing base.
2. Pull component bracket out the front of the dispenser far enough so the transformer connector can be disconnected from the main wiring harness.
3 Disconnect the transformer four pin connector from the four pin plug on the main wiring harness.
4. Remove the two #6-32 keps nuts securing the transformer to the rear of the component bracket.
5. Remove and discard the transformer.
6. Install new transformer on the rear of the component bracket and secure with two #6-32 keps nuts.
7. Connect the four pin connector on the transformer to four pin plug on the main wiring harness.
8. Place the component bracket into position and tighten the two #8-32 screws.

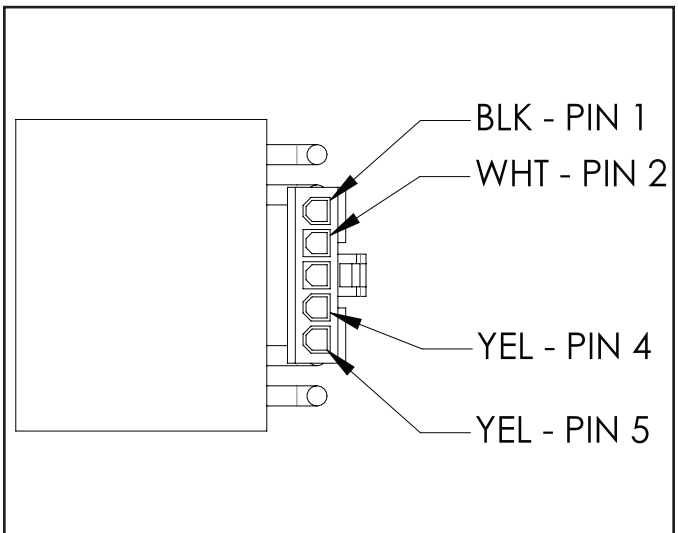

FIG. 51 TRANSFORMER TERMINALS

TRIAC

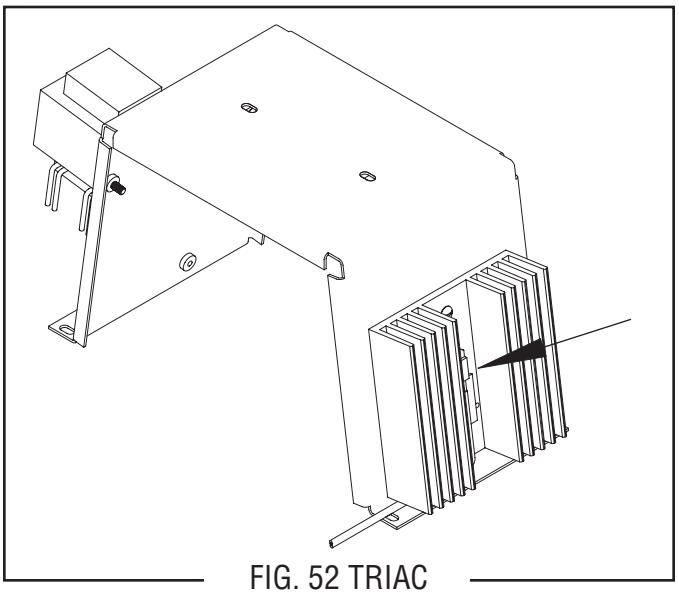

FIG. 52 TRIAC

Location:

The triac is mounted on the right side of the tank mounting bracket for models IMIX-3,4 & 5.

Test Procedure:

1. With the heater (load) connected and the triac is turned on, the voltage between the gate (TAN wire) and either of the other two terminals is less than 3 volts AC.

Removal and Replacement:

1. Disconnect the dispenser from the power source.
2. Disconnect the two pin connector from the dispenser main wiring harness.
3. Disconnect the BLU wire from ther limit thermostat.
4. Disconnect the BLK wire from the terminal block.
5. Remove the two #6-32 screws attaching the heat sink to the tank mounting bracket and remove the heat sink assembly.
6. Remove the #6-32 screw and lockwasher attaching the triac to the heat sink.
7. Install the new triac to the heat sink using the #6-32 screw and lockwasher.
8. Install the heat sink to the tank mounting bracket using the two #6-32 screws.
9. Refer to Schematic Wiring Diagrams for reconnecting the wires.

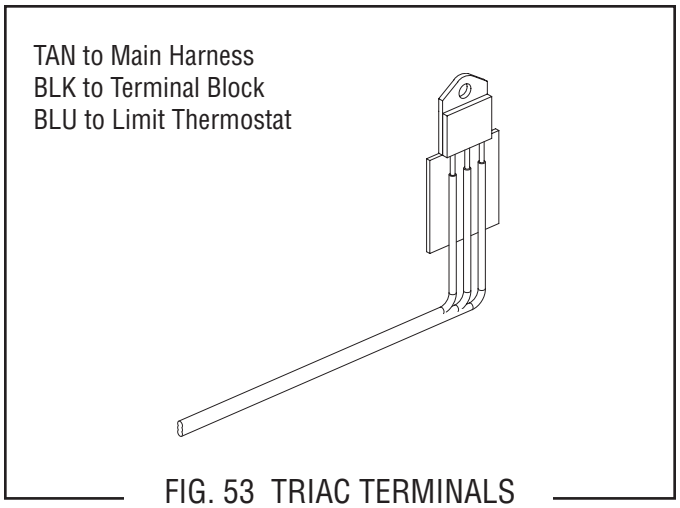

FIG. 53 TRIAC TERMINALS

INPUT/OUTPUT CHART
for IMIX-3,4,5

iMIX-3/4/5 I/O 37104.####				
Pin	Application IMIX	Type	Values	
J1-1	N/A	N/A	N/A	N/A
J1-2	Heater	Output	120 VAC	Triac signal
J1-3	Safety in	Input		Float switch IMIX and ICED
J1-4	Neutral/L2	Input	N or 120VAC	Self explanatory
J1-5	L1	Input	120 VAC	Self explanatory
J1-6	Light	Output	120 VAC	Turns on Ballast
J1-7	Hot Water	Output	120 VAC	Self explanatory
J1-8	Inlet	Output	120 VAC	Inlet activated with refill circuit
J2-1	Transformer	Output	120 VAC	Self explanatory
J2-2	Transformer	Output	0 or 120VAC	Self explanatory
J2-3	N/A	N/A	N/A	N/A
J2-4	Transformer	Input	24 VAC	Supplies power for board operation
J2-5	Transformer	Input	24 VAC	Supplies power for board operation
J3-1	Auger 1	Output	0 to 24 VDC	Adjustable to change dispense rate
J3-2	RPM sensor	Input	Signal	Hall Effect
J3-3	RPM sensor	Output	5 VDC +	Power supply to Hall Effect
J3-4	RPM sensor	Output	Negative	Power supply to Hall Effect
J3-5	N/A	N/A	N/A	N/A
J3-6	Dispense/Whipper	Output	N or L2	Neutral or second leg
J3-7	Dispense/Whipper	Output	L1	Leg 1 activated with dispense
J3-8	Low powder detect	?	?	?
J3-9	Low powder detect	Output	5 VDC +	Sensor power supply
J3-10	Low powder detect	?	?	?
J3-11	Ground	Gnd	DC ground	Self explanatory
J3-12	N/A	N/A	N/A	N/A
J3-13	N/A	N/A	N/A	N/A
J3-14	N/A	N/A	N/A	N/A
J4-1	Auger 2	Output	0 to 24 VDC	Adjustable to change dispense rate
J4-2	RPM sensor	Input	Signal	Hall Effect
J4-3	RPM sensor	Output	5 VDC +	Power supply to Hall Effect
J4-4	RPM sensor	Output	Negative	Power supply to Hall Effect
J4-5	N/A	N/A	N/A	N/A
J4-6	Dispense/Whipper	Output	N or L2	Nuetral or second leg
J4-7	Dispense/Whipper	Output	L1	Leg 1 activated with dispense
J4-8	Low powder detect	?	?	?
J4-9	Low powder detect	Output	5 VDC +	Sensor power supply
J4-10	Low powder detect	?	?	?
J4-11	Ground	Gnd	DC ground	Self explanatory
J4-12	N/A	N/A	N/A	N/A
J4-13	N/A	N/A	N/A	N/A
J4-14	N/A	N/A	N/A	N/A
J5-1	Auger 3	Output	0 to 24 VDC	Adjustable to change dispense rate
J5-2	RPM sensor	Input	Signal	Hall Effect
J5-3	RPM sensor	Output	5 VDC +	Power supply to Hall Effect
J5-4	RPM sensor	Output	Negative	Power supply to Hall Effect
J5-5	N/A	N/A	N/A	N/A
J5-6	Dispense/Whipper	Output	N or L2	Nuetral or second leg
J5-7	Dispense/Whipper	Output	L1	Leg 1 activated with dispense
J5-8	Low powder detect	?	?	?
J5-9	Low powder detect	Output	5 VDC +	Sensor power supply
J5-10	Low powder detect	?	?	?
J5-11	Ground	Gnd	DC ground	Self explanatory
J5-12	N/A	N/A	N/A	N/A
J5-13	N/A	N/A	N/A	N/A
J5-14	N/A	N/A	N/A	N/A

INPUT/OUTPUT CHART (Continued)
for IMIX-3,4,5

J6-1	Auger 4	Output	0 to 24 VDC	Adjustable to change dispense rate
J6-2	RPM sensor	Input	Signal	Hall Effect
J6-3	RPM sensor	Output	5 VDC +	Power supply to Hall Effect
J6-4	RPM sensor	Output	Negative	Power supply to Hall Effect
J6-5	N/A	N/A	N/A	N/A
J6-6	Dispense/Whipper	Output	N or L2	Nuetral or second leg
J6-7	Dispense/Whipper	Output	L1	Leg 1 activated with dispense
J6-8	Low powder detect	?	?	?
J6-9	Low powder detect	Output	5 VDC +	Sensor power supply
J6-10	Low powder detect	?	?	?
J6-11	Ground	Gnd	DC ground	Self explanatory
J6-12	N/A	N/A	N/A	N/A
J6-13	N/A	N/A	N/A	N/A
J6-14	N/A	N/A	N/A	N/A
J7-1	Auger 5	Output	0 to 24 VDC	Adjustable to change dispense rate
J7-2	RPM sensor	Input	Signal	Hall Effect
J7-3	RPM sensor	Output	5 VDC +	Power supply to Hall Effect
J7-4	RPM sensor	Output	Negative	Power supply to Hall Effect
J7-5	N/A	N/A	N/A	N/A
J7-6	Dispense/Whipper	Output	N or L2	Nuetral or second leg
J7-7	Dispense/Whipper	Output	L1	Leg 1 activated with dispense
J7-8	Low powder detect	?	?	?
J7-9	Low powder detect	Output	5 VDC +	Sensor power supply
J7-10	Low powder detect	?	?	?
J7-11	Ground	Gnd	DC ground	Self explanatory
J7-12	N/A	N/A	N/A	N/A
J7-13	N/A	N/A	N/A	N/A
J7-14	N/A	N/A	N/A	N/A
J8-1	Beeper	Output	8 VDC	Self explanatory
J8-2	Beeper	Output	Ground	Self explanatory
J9-1	External Novram		External Novram	External Novram
J9-2	External Novram		External Novram	External Novram
J9-3	External Novram		External Novram	External Novram
J9-4	External Novram		External Novram	External Novram
J9-5	External Novram		External Novram	External Novram
J10-1	?			Shorted to J10-13
J10-2	?			
J10-3	?			
J10-4	?			
J10-5	?			
J10-6	?			
J10-7	?			
J10-8	?			
J10-9	?			
J10-10	?			
J10-11	?			
J10-12	?			
J10-13	?			Shorted to J10-1
J11-1	Display board	Output	8 VDC	Display power supply
J11-2	Display board	I/O	Comm	Communication
J11-3	Display board	GRND	GRND	GRND
J11-4	Display board	I/O	Comm	Communication

INPUT/OUTPUT CHART (Continued)
for IMIX-3,4,5

J12-1	Temp Sensor	Input	Varistor	
J12-2	N/A	N/A	N/A	N/A
J12-3	Level Probe	signal	Low AC	Monitors tank level
J12-4	Level Probe	grnd	Low AC	Monitors tank level
J12-5	Temp Sensor	Input	?	
J12-6	N/A	N/A	N/A	N/A
J12-7	Run Position	Input	?	Signals run position from rinse run switch
J12-8	N/A	N/A	N/A	N/A
J12-9	N/A	N/A	N/A	N/A
J12-10	N/A	N/A	N/A	N/A
J12-11	N/A	N/A	N/A	N/A
J12-12	N/A	N/A	N/A	N/A
J12-13	Ground	grnd	grnd	Ground for rinse/run and day night switches
J12-14	Rinse position	Input	?	Signals rinse position from rinse run switch
J12-15	On position	Input	?	Signal on from day night switch
J12-16	Off position	Input	?	Signal off from day night switch
J13-1	Program connector			
J13-2	Program connector			
J13-3	Program connector			
J13-4	Program connector			
J13-5	Program connector			
J13-6	Program connector			
J13-7	Program connector			
J13-8	Program connector			
J13-9	Program connector			
J13-10	Program connector			

SCHEMATIC WIRING DIAGRAM
iMIX-3

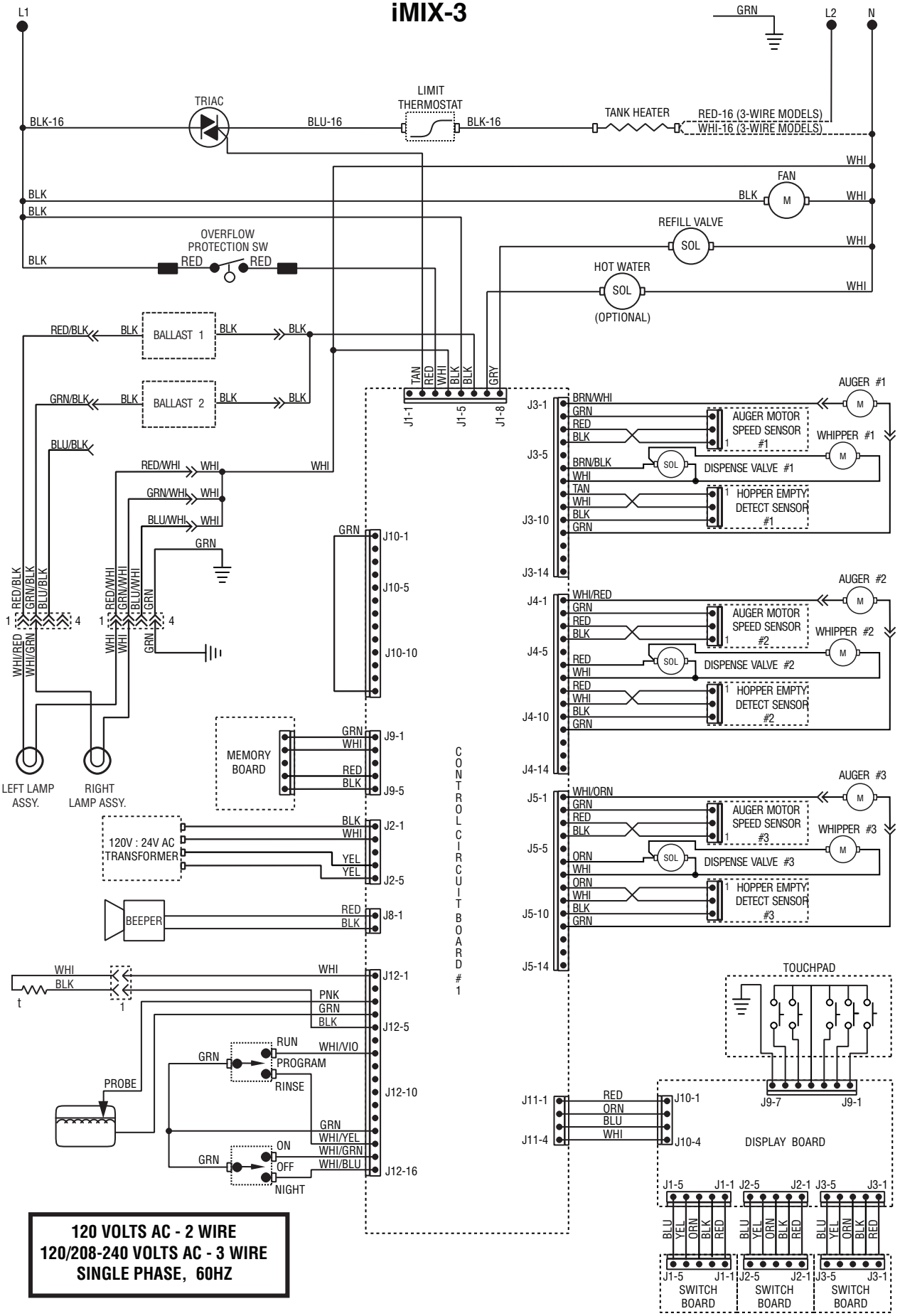

42032 072513

SCHEMATIC WIRING DIAGRAM
iMIX-3

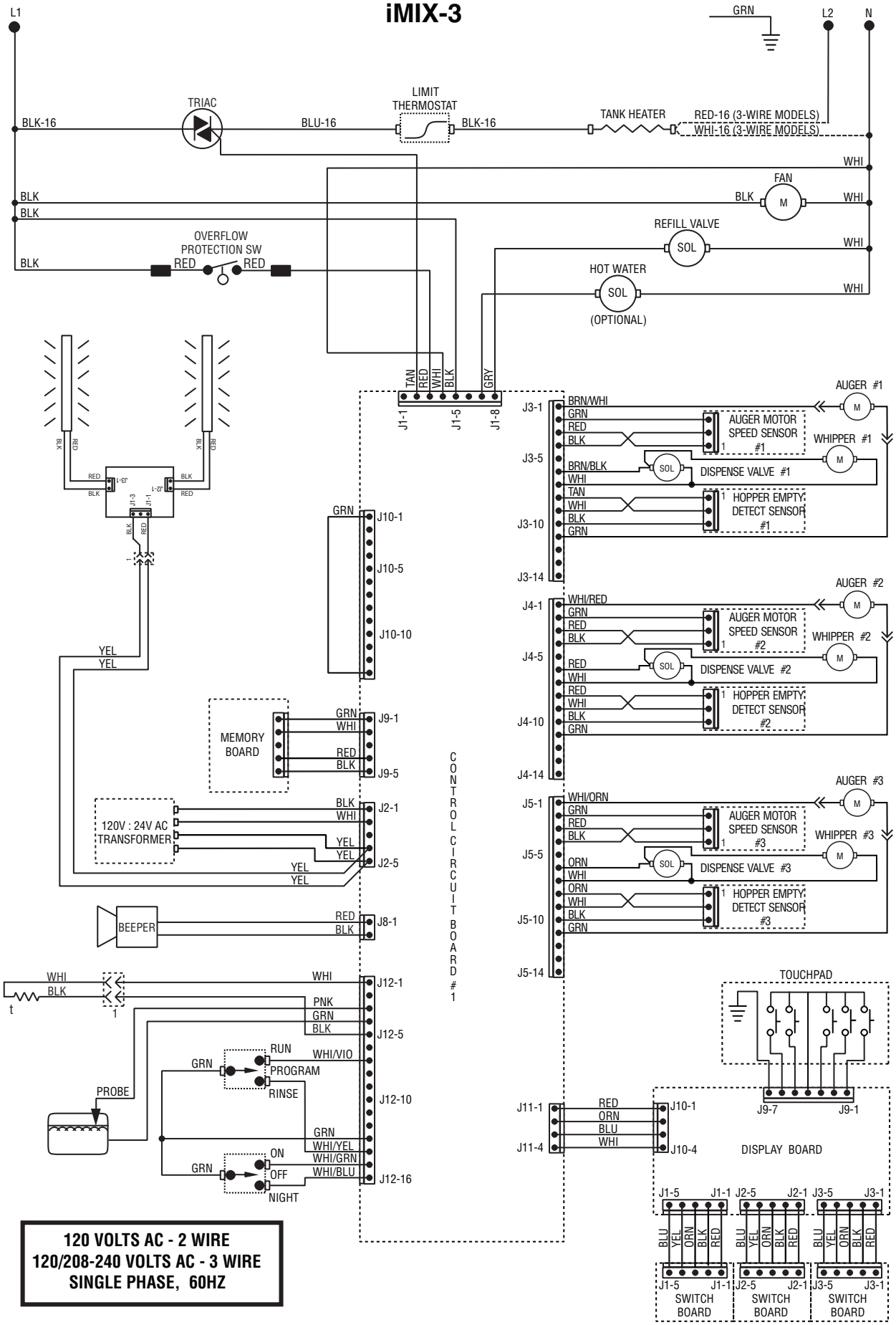

SCHEMATIC WIRING DIAGRAM
iMIX-3A

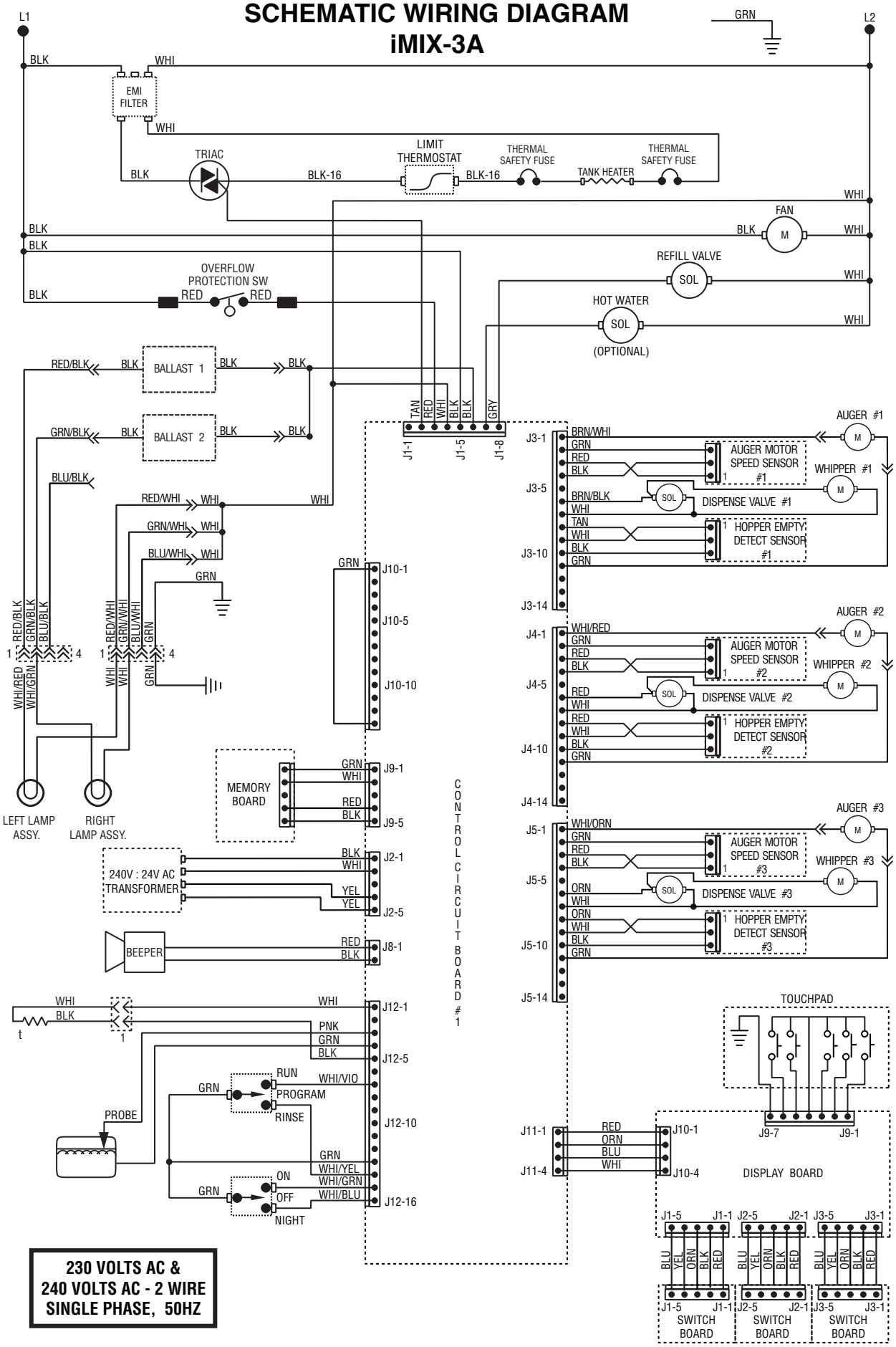

230 VOLTS AC &
240 VOLTS AC - 2 WIRE
SINGLE PHASE, 50HZ

42032 072513

SCHEMATIC WIRING DIAGRAM
iMIX-3A

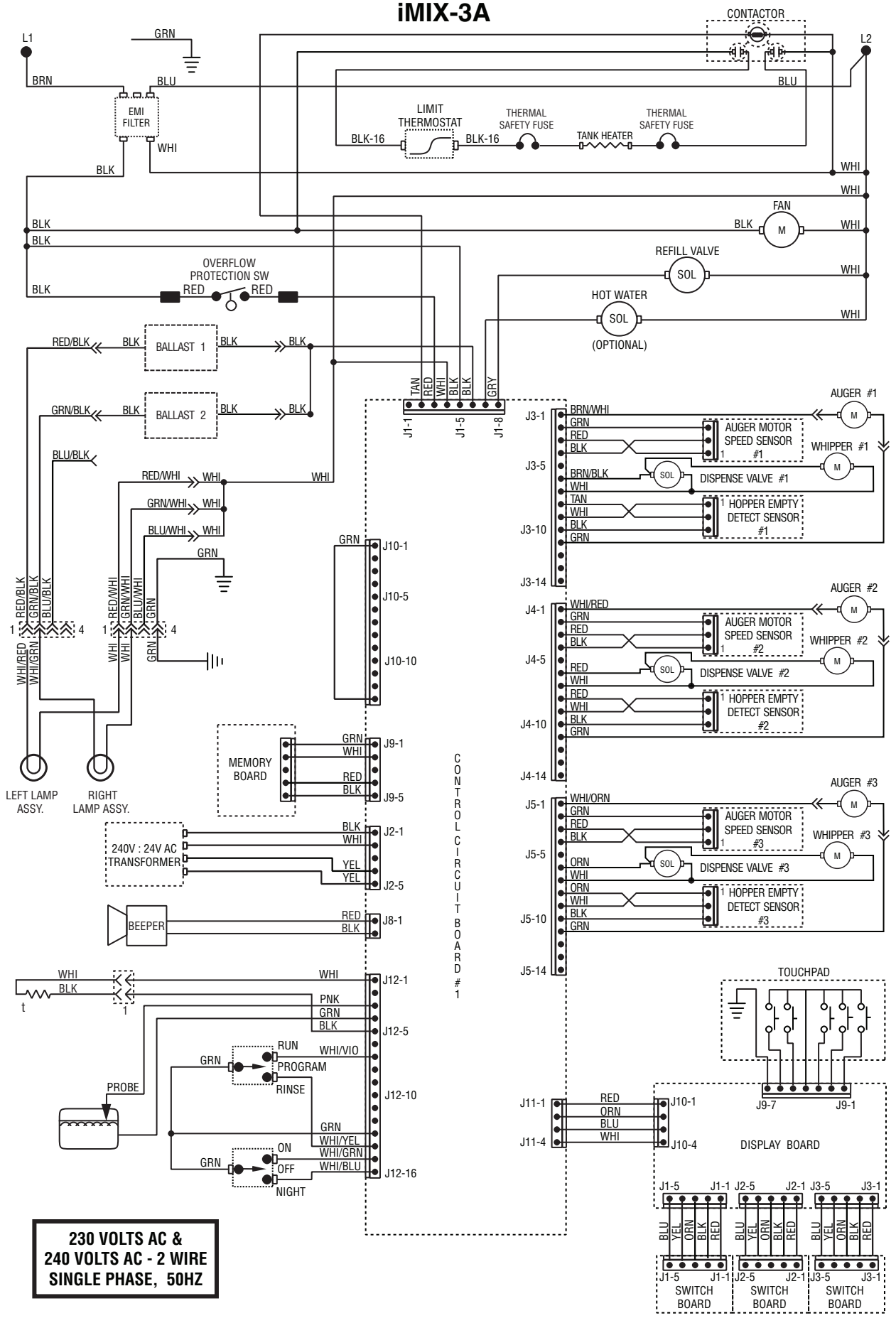

42032 110316

SCHEMATIC WIRING DIAGRAM
iMIX-3A

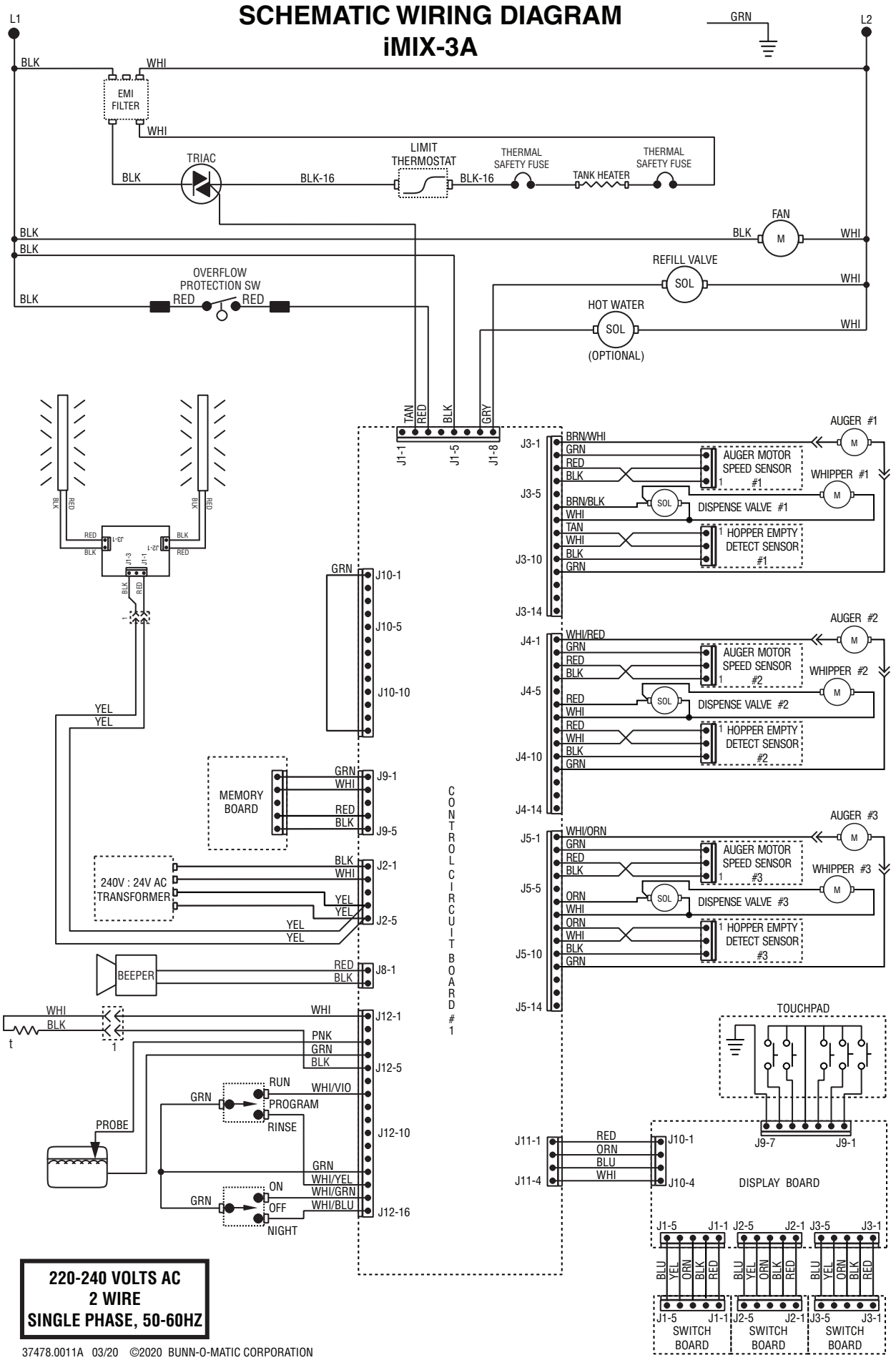

220-240 VOLTS AC
2 WIRE
SINGLE PHASE, 50-60HZ

37478.0011A 03/20 ©2020 BUNN-O-MATIC CORPORATION

SCHEMATIC WIRING DIAGRAM
iMIX-4/iMIX-5

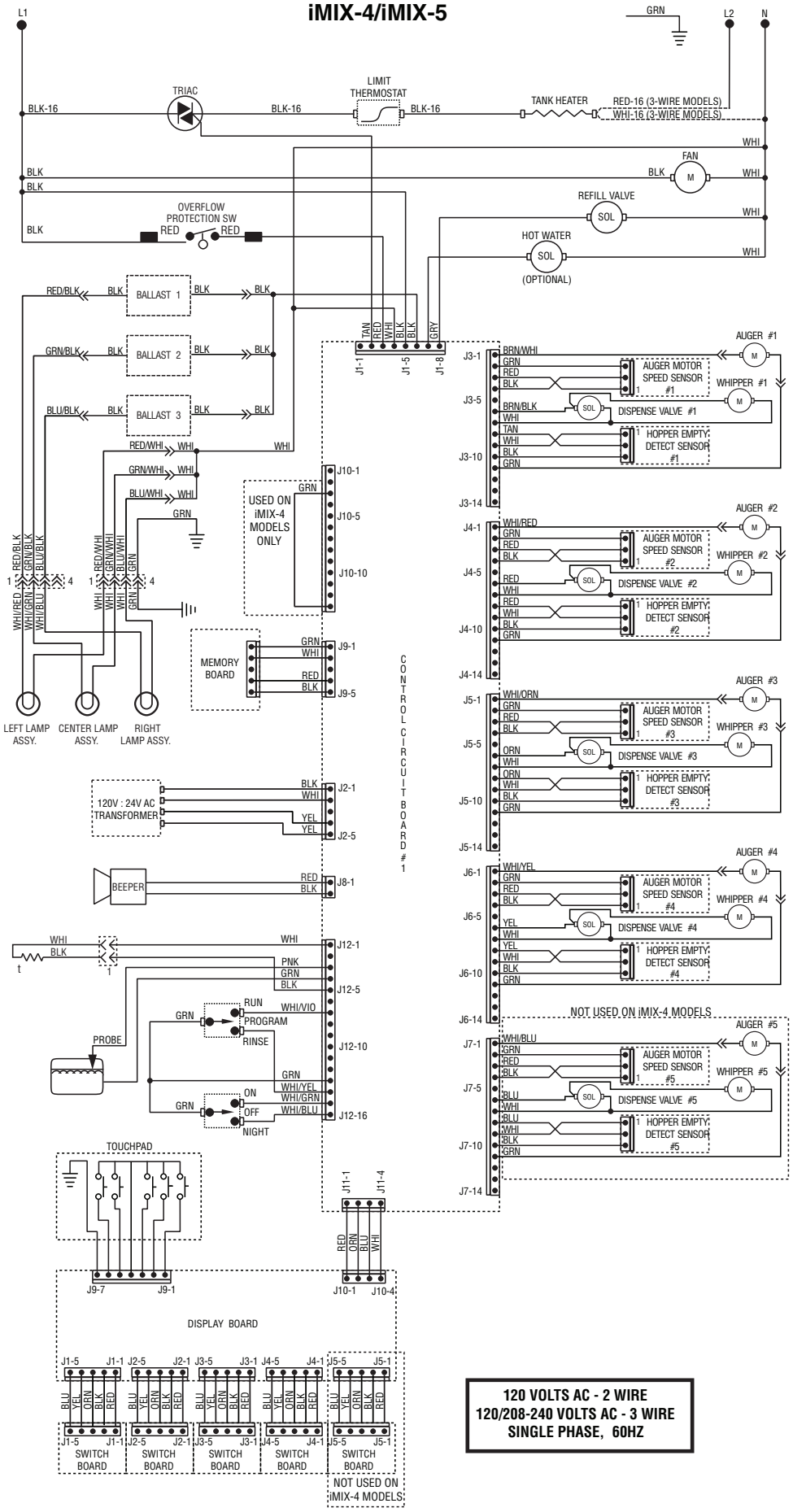

120 VOLTS AC - 2 WIRE
120/208-240 VOLTS AC - 3 WIRE
SINGLE PHASE, 60HZ

SCHEMATIC WIRING DIAGRAM
iMIX-4/iMIX-5

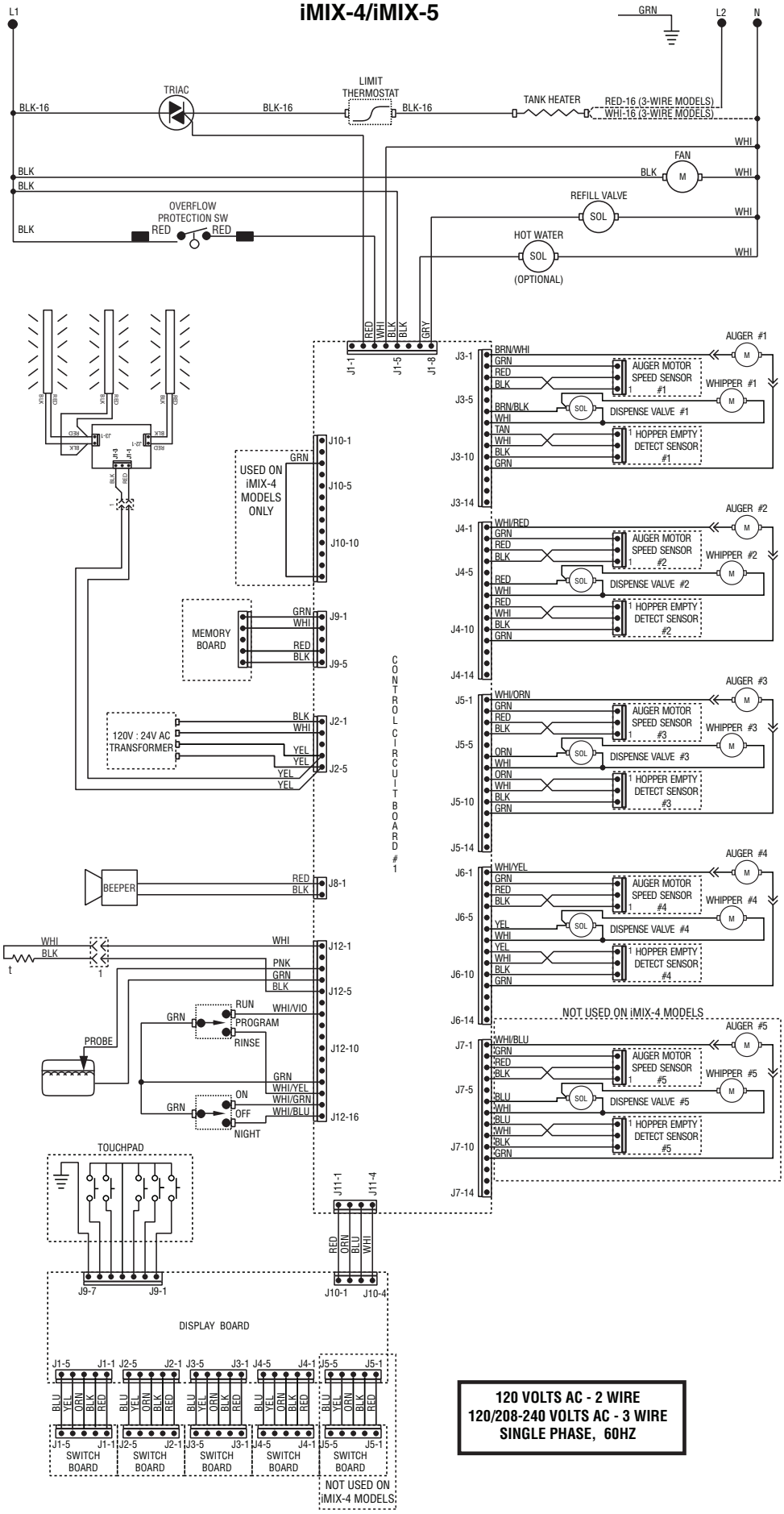

120 VOLTS AC - 2 WIRE
120/208-240 VOLTS AC - 3 WIRE
SINGLE PHASE, 60HZ

42032 072513

SCHEMATIC WIRING DIAGRAM
iMIXA-4/iMIXA-5

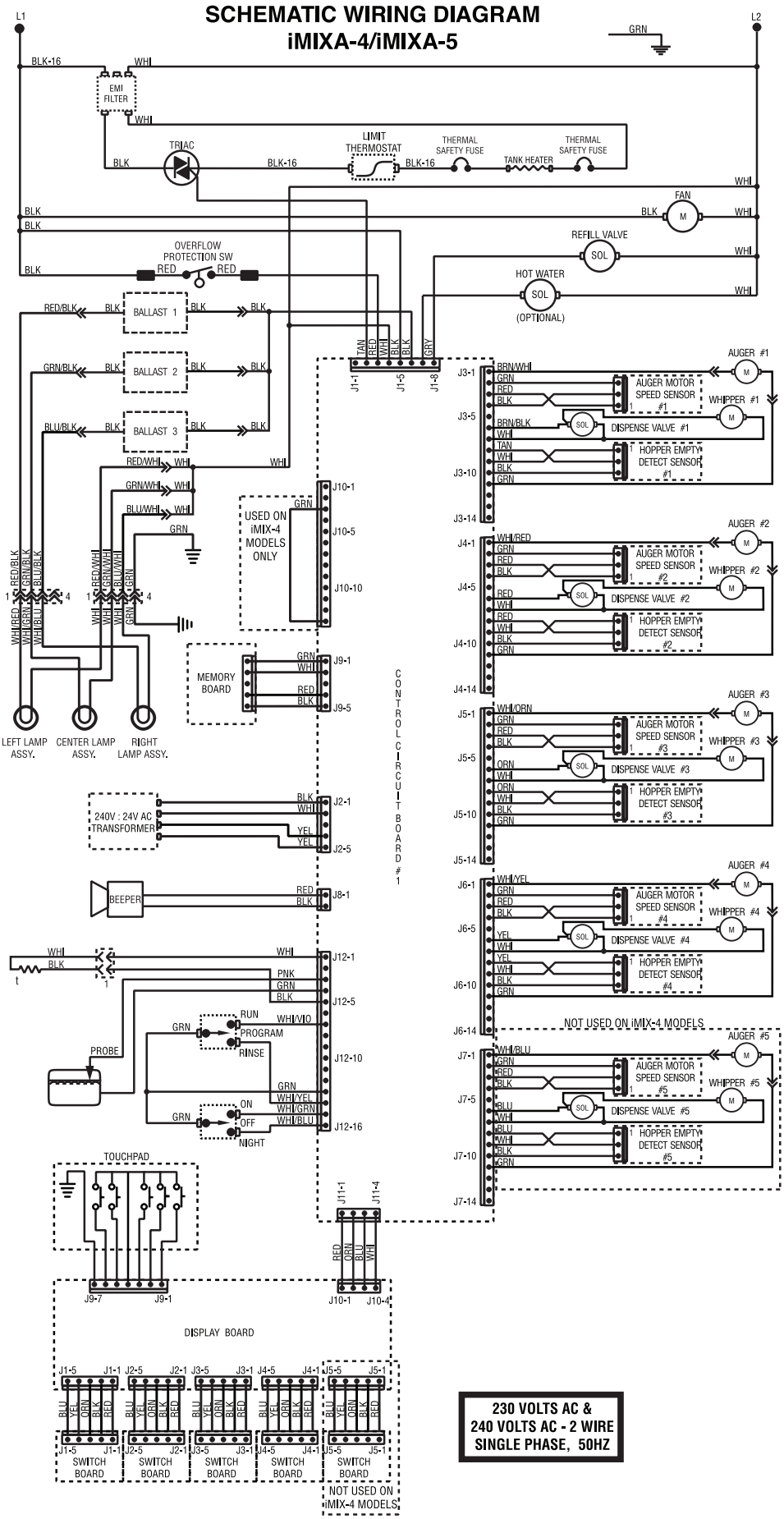

INPUT/OUTPUT CHART
for IMIX-3S+ & 5S+

iMIX-3S+/5S+ I/O 38831.####				
Pin	Application IMIX	Type	Values	
J1-1	Program connector			
J1-2	Program connector			
J1-3	Program connector			
J1-4	Program connector			
J1-5	Program connector			
J1-6	Program connector			
J1-7	Program connector			
J1-8	Program connector			
J1-9	Program connector			
J1-10	Program connector			
J2-1	Auger 1	Output	0 to 24 VDC	Adjustable to change dispense rate
J2-2	Auger 2	Output	0 to 24 VDC	Adjustable to change dispense rate
J2-3	Auger 3	Output	0 to 24 VDC	Adjustable to change dispense rate
J2-4	Auger 4	Output	0 to 24 VDC	Adjustable to change dispense rate
J2-5	Auger 5	Output	0 to 24 VDC	Adjustable to change dispense rate
J2-6	Ground	Gnd	DC ground	Self explanatory
J3-1	Display board	I/O	Comm	Communication
J3-2	Display board	GRND	GRND	GRND
J3-3	Display board	I/O	Comm	Communication
J3-4	Display board	Output	+8 VDC	Display power supply
J4-1	N/A	N/A	N/A	N/A
J4-2	Dispense/Whipper 1	Output	L1	activated with dispense
J4-3	Dispense/Whipper 2	Output	L1	activated with dispense
J4-4	Dispense/Whipper 3	Output	L1	activated with dispense
J4-5	Dispense/Whipper 4	Output	L1	activated with dispense
J4-6	Dispense/Whipper 5	Output	L1	activated with dispense
J4-7	N/A	N/A	N/A	N/A
J4-8	Temp Sensor	GRND	GND	
J4-9	Level Probe	GRND	GND	
J4-10	N/A	N/A	N/A	N/A
J4-11	Temp Sensor	Input	0 to 5 VDC	Monitors tank temperature
J4-12	Rinse position	Input	0VDC in rinse	Signals rinse position from rinse run switch
J4-13	Inlet	Output	120 VAC	Inlet activated with refill circuit
J4-14	Safety in	Input	L1	Float switch supplies refill only
J4-15	L1	Input	120 VAC	Self explanatory
J4-16	Neutral/L2	Input	N or 120VAC	Nuetral or second leg
J4-17	Dispense/Whipper	Output	N or L2	Nuetral or second leg
J4-18	Dispense/Whipper	Output	N or L2	Nuetral or second leg
J4-19	N/A	N/A	N/A	N/A
J4-20	N/A	N/A	N/A	N/A
J4-21	Ground	grnd	grnd	Ground for rinse/run switch
J4-22	N/A	N/A	N/A	N/A
J4-23	Run Position	Input	0VDC in run	Signals run position from rinse run switch
J4-24	Level Probe	signal	Low AC	Monitors tank level
J5-1	Transformer	Output	120 VAC	L1
J5-2	Transformer	Output	0 or 120VAC	N or L2
J5-3	N/A	N/A	N/A	N/A
J5-4	Transformer	Input	24 VAC	Supplies power for board operation
J5-5	Transformer	Input	24 VAC	Supplies power for board operation

SCHEMATIC WIRING DIAGRAM
IMIX-3S+ / IMIX-5S+

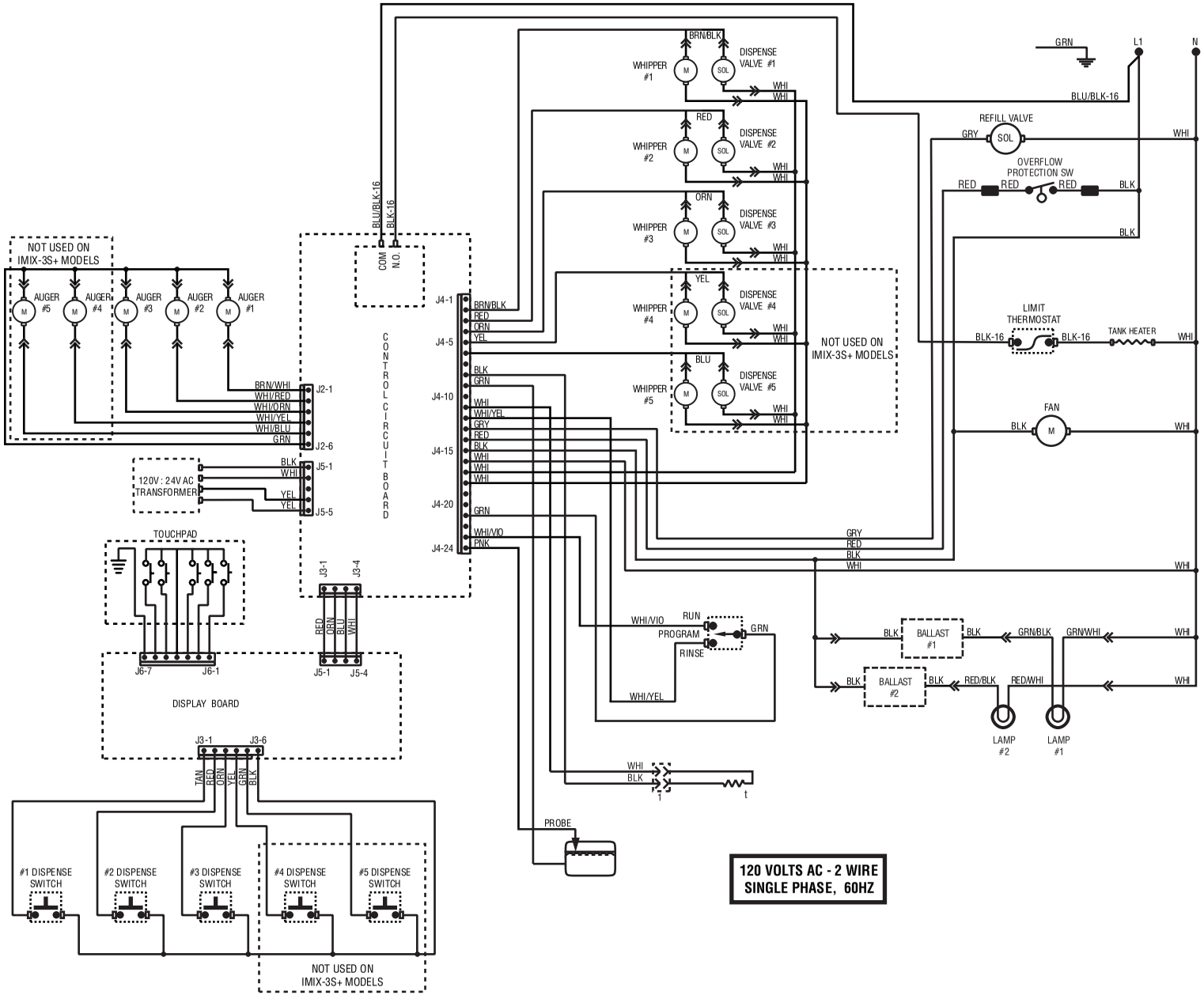

SCHEMATIC WIRING DIAGRAM
IMIX-3S+ / IMIX-5S+

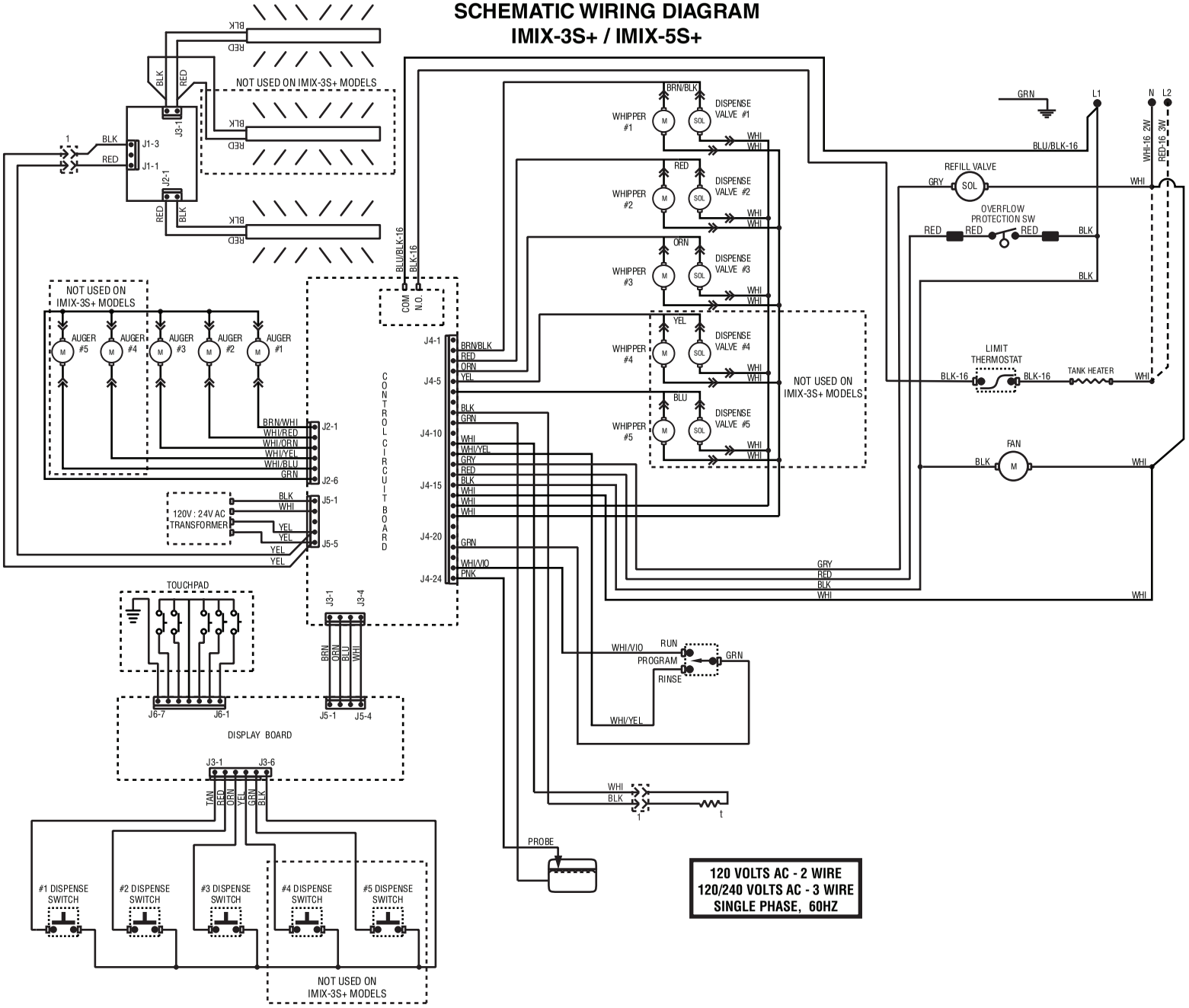

SCHEMATIC WIRING DIAGRAM
IMIX-3S+A / IMIX-5S+A

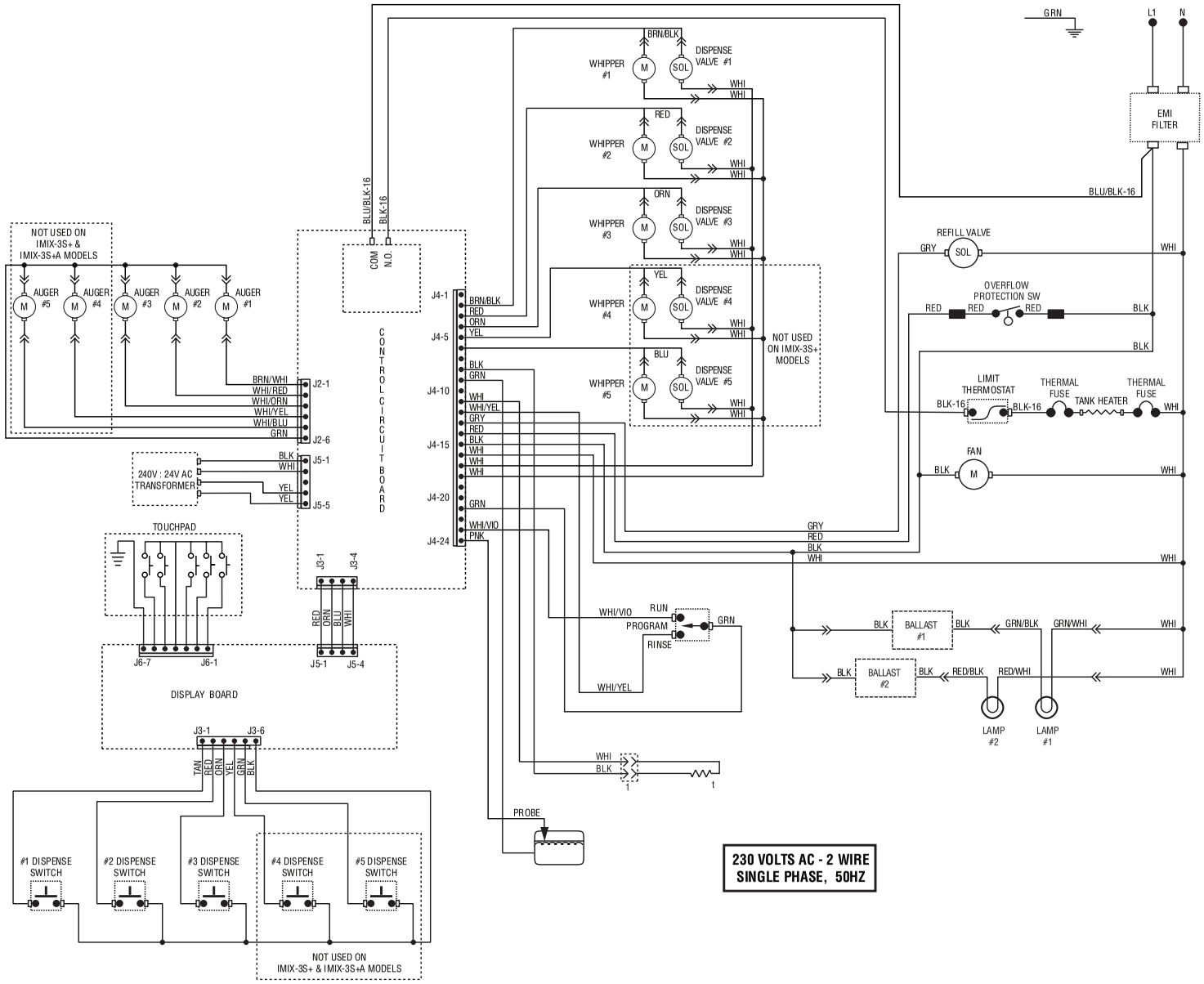

SCHEMATIC WIRING DIAGRAM
IMIX5S+ - HOT & ICED

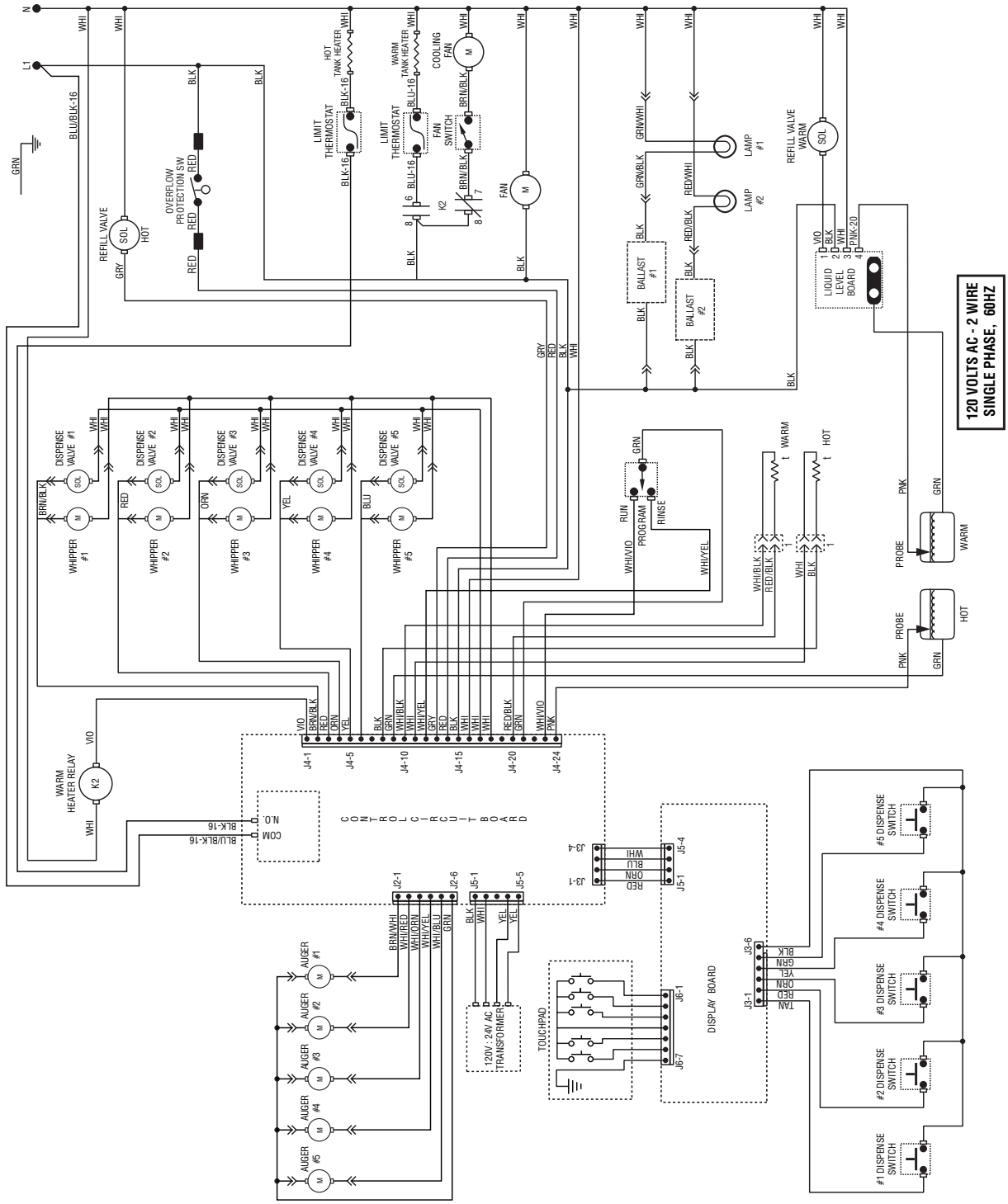
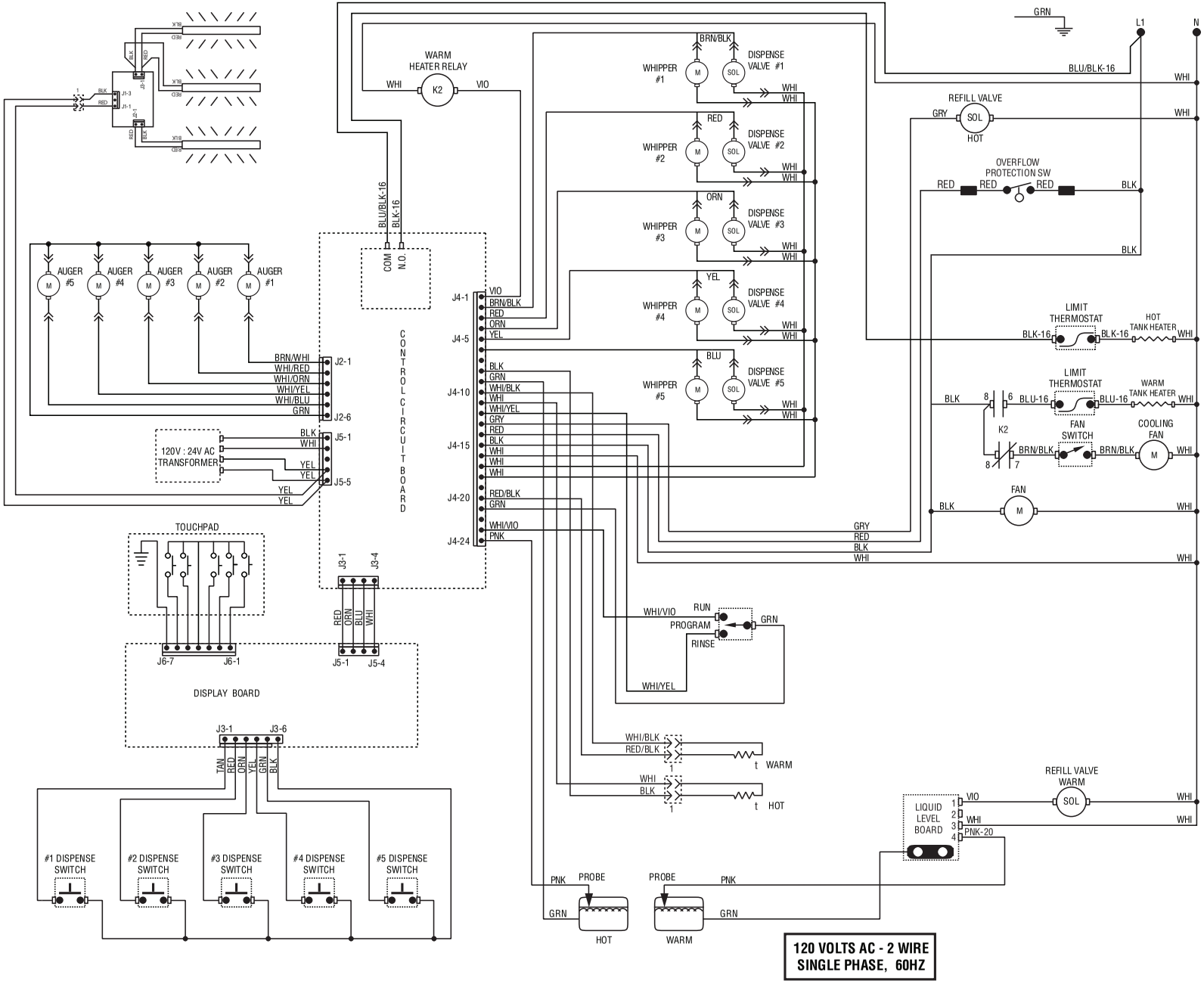
SCHEMATIC WIRING DIAGRAM
IMIX5S+ - HOT & ICED