BUNN®

IMIX®-3 & IMIX®-5 TIM HORTONS





INSTALLATION & OPERATING GUIDE

IN CANADA:
BUNN-O-MATIC CORPORATION OF CANADA
280 INDUSTRIAL PARKWAY SOUTH
AURORA, ONTARIO, CANADA L4G 3T9
PHONE: (905) 841-2866 FAX: (905) 841-2775

IN THE USA:
BUNN-O-MATIC CORPORATION
POST OFFICE BOX 3227
SPRINGFIELD, ILLINOIS 62708-3227
PHONE: (217) 529-6601 FAX: (217) 529-6644

37510.7901B 04/15 ©2012 Bunn-O-Matic Corporation

BUNN-O-MATIC COMMERCIAL PRODUCT WARRANTY (CANADA)

Bunn-O-Matic Corporation of Canada ("Bunn") warrants equipment manufactured by it as follows:

1) Airpots, thermal carafes, decanters, GPR servers, iced tea/coffee dispensers, MCP/MCA pod brewers thermal servers and Thermofresh servers (mechanical and digital) - 1 year parts and 1 year labour.
2) All other equipment - 2 years parts and 1 year labour plus added warranties as specified below:
   a) Electronic circuit and/or control boards - parts and labour for 3 years.
   b) Compressors on refrigeration equipment - 5 years parts and 1 year labour.
   c) Grinding burrs on coffee grinding equipment to grind coffee to meet original factory screen sieve analysis - parts and labour for 4 years or 40,000 pounds of coffee, whichever comes first.

These warranty periods run from the date of installation. Bunn warrants that the equipment manufactured by it will be commercially free of defects in material and workmanship existing at the time of manufacture and appearing within the applicable warranty period. This warranty does not apply to any equipment, component or part that was not manufactured by Bunn or that, in Bunn's judgement, has been affected by misuse, neglect, alteration, improper installation or operation, improper maintenance or repair, non periodic cleaning and descaling, equipment failures related to poor water quality, damage or casualty. In addition, the warranty does not apply to replacement of items subject to normal use including but not limited to user replaceable parts such as seals and gaskets. This warranty is conditioned on the Buyer 1) giving Bunn prompt notice of any claim to be made under this warranty by telephone at (905) 841-2866 or by writing to 280 Industrial Parkway South, Aurora, Ontario, L4G 3T9. 2) if requested by Bunn, shipping the defective equipment prepaid to an authorized Bunn service location; and 3) receiving prior authorization from Bunn that the defective equipment is under warranty.

THE FOREGOING WARRANTY IS EXCLUSIVE AND IS IN LIEU OF ANY OTHER WARRANTY, CONDITION, WRITTEN OR ORAL, EXPRESS OR IMPLIED, INCLUDING, BUT NOT LIMITED TO, ANY IMPLIED WARRANTY OF EITHER MERCHANTABILITY, MERCHANTABLE QUALITY OR FITNESS FOR A PARTICULAR PURPOSE. The agents, dealers or employees of Bunn are not authorized to make modifications to this warranty or to make additional warranties that are binding on Bunn. Accordingly, statements by such individuals, whether oral or written, do not constitute warranties and should not be relied upon.

If Bunn determines in its sole discretion that the defective equipment is covered by warranty, Bunn, at its exclusive option while the equipment is under warranty, shall either 1) provide at no charge replacement parts and/or labour (during the applicable parts and labour warranty periods specified above) to repair the defective components, provided that this repair is done by a Bunn Authorized Service Representative; or 2) shall replace the equipment or refund the purchase price for the equipment.

THE BUYER'S REMEDY AGAINST BUNN FOR THE BREACH OF ANY OBLIGATION ARISING OUT OF THE SALE OF THIS EQUIPMENT, WHETHER DERIVED FROM WARRANTY OR OTHERWISE, SHALL BE LIMITED, AT BUNN'S SOLE OPTION AS SPECIFIED HEREIN, TO REPAIR, REPLACEMENT OR REFUND.

In no event shall Bunn be liable for any other damage or loss, including, but not limited to, lost profits, lost sales, loss of use of equipment, claims of Buyer's customers, cost of capital, cost of down time, cost of substitute equipment, facilities or services, or any other special, incidental, consequential or punitive damages.

392, AutoPOD, AXIOM, BrewLOGIC, BrewMETER, Brew Better Not Bitter, BrewWISE, BrewWIZARD, BUNN Espress, BUNN Family Gourmet, BUNN Gourmet, BUNN Pour-O-Matic, BUNN, BUNN with the stylized red line, BUNNlink, Bunn-OMatic, Bunn-O-Matic, BUNNserve, BUNNSERVE with the stylized wrench design, Cool Froth, DBC, Dr. Brew stylized Dr. design, Dual, Easy Pour, EasyClear, EasyGard, FlavorGard, Gourmet Ice, Gourmet Juice, High Intensity, iMIX, Infusion Series, Intellisteam, My Café, PowerLogic, Quality Beverage Equipment Worldwide, Respect Earth, Respect Earth with the stylized leaf and coffee cherry design, Safety-Fresh, savemycoffee.com, Scale-Pro, Silver Series, Single, Smart Funnel, Smart Hopper, SmartWAVE, Soft Heat, SplashGard, The Mark of Quality in Beverage Equipment Worldwide, ThermoFresh, Titan, A Partner You Can Count On, Air Brew, Air Infusion, Beverage Bar Creator, Beverage Profit Calculator, Brew better, not bitter., BUNNSource, Coffee At Its Best, Cyclonic Heating System, Digital Brewer Control, Nothing Brews Like a BUNN, Pouring Profits, Signature Series, Tea At Its Best, Phase Brew, The Horizontal Red Line, trifecta, Ultra, Velocity Brew are either trademarks or registered trademarks of Bunn-O-Matic Corporation.

BUNN-O-MATIC COMMERCIAL PRODUCT WARRANTY (USA)

Bunn-O-Matic Corp. ("BUNN") warrants equipment manufactured by it as follows:

1) Airpots, thermal carafes, decanters, GPR servers, iced tea/coffee dispensers, MCP/MCA pod brewers thermal servers and Thermofresh servers (mechanical and digital)- 1 year parts and 1 year labor.

2) All other equipment - 2 years parts and 1 year labor plus added warranties as specified below:

   a) Electronic circuit and/or control boards - parts and labor for 3 years.

   b) Compressors on refrigeration equipment - 5 years parts and 1 year labor.

   c) Grinding burrs on coffee grinding equipment to grind coffee to meet original factory screen sieve analysis - parts and labor for 4 years or 40,000 pounds of coffee, whichever comes first.

These warranty periods run from the date of installation BUNN warrants that the equipment manufactured by it will be commercially free of defects in material and workmanship existing at the time of manufacture and appearing within the applicable warranty period. This warranty does not apply to any equipment, component or part that was not manufactured by BUNN or that, in BUNN's judgment, has been affected by misuse, neglect, alteration, improper installation or operation, improper maintenance or repair, non periodic cleaning and descaling, equipment failures related to poor water quality, damage or casualty. In addition, the warranty does not apply to replacement of items subject to normal use including but not limited to user replaceable parts such as seals and gaskets. This warranty is conditioned on the Buyer 1) giving BUNN prompt notice of any claim to be made under this warranty by telephone at (217) 529-6601 or by writing to Post Office Box 3227, Springfield, Illinois 62708-3227; 2) if requested by BUNN, shipping the defective equipment prepaid to an authorized BUNN service location; and 3) receiving prior authorization from BUNN that the defective equipment is under warranty.

THE FOREGOING WARRANTY IS EXCLUSIVE AND IS IN LIEU OF ANY OTHER WARRANTY, WRITTEN OR ORAL, EXPRESS OR IMPLIED, INCLUDING, BUT NOT LIMITED TO, ANY IMPLIED WARRANTY OF EITHER MERCHANTABILITY OR FITNESS FOR A PARTICULAR PURPOSE. The agents, dealers or employees of BUNN are not authorized to make modifications to this warranty or to make additional warranties that are binding on BUNN. Accordingly, statements by such individuals, whether oral or written, do not constitute warranties and should not be relied upon.

If BUNN determines in its sole discretion that the equipment does not conform to the warranty, BUNN, at its exclusive option while the equipment is under warranty, shall either 1) provide at no charge replacement parts and/or labor (during the applicable parts and labor warranty periods specified above) to repair the defective components, provided that this repair is done by a BUNN Authorized Service Representative; or 2) shall replace the equipment or refund the purchase price for the equipment.

THE BUYER'S REMEDY AGAINST BUNN FOR THE BREACH OF ANY OBLIGATION ARISING OUT OF THE SALE OF THIS EQUIPMENT, WHETHER DERIVED FROM WARRANTY OR OTHERWISE, SHALL BE LIMITED, AT BUNN'S SOLE OPTION AS SPECIFIED HEREIN, TO REPAIR, REPLACEMENT OR REFUND.

In no event shall BUNN be liable for any other damage or loss, including, but not limited to, lost profits, lost sales, loss of use of equipment, claims of Buyer's customers, cost of capital, cost of down time, cost of substitute equipment, facilities or services, or any other special, incidental or consequential damages.

392, AutoPOD, AXIOM, BrewLOGIC, BrewMETER, Brew Better Not Bitter, BrewWISE, BrewWIZARD, BUNN Espress, BUNN Family Gourmet, BUNN Gourmet, BUNN Pour-O-Matic, BUNN, BUNN with the stylized red line, BUNNlink, Bunn-OMatic, Bunn-O-Matic, BUNNserve, BUNNSERVE with the stylized wrench design, Cool Froth, DBC, Dr. Brew stylized Dr. design, Dual, Easy Pour, EasyClear, EasyGard, FlavorGard, Gourmet Ice, Gourmet Juice, High Intensity, iMIX, Infusion Series, Intellisteam, My Café, Phase Brew, PowerLogic, Quality Beverage Equipment Worldwide, Respect Earth, Respect Earth with the stylized leaf and coffee cherry design, Safety-Fresh, savemycoffee.com, Scale-Pro, Silver Series, Single, Smart Funnel, Smart Hopper, SmartWAVE, Soft Heat, SplashGard, The Mark of Quality in Beverage Equipment Worldwide, ThermoFresh, Titan, trifecta, Velocity Brew, A Partner You Can Count On, Air Brew, Air Infusion, Beverage Bar Creator, Beverage Profit Calculator, Brew better, not bitter., BUNNSource, Coffee At Its Best, Cyclonic Heating System, Daypart, Digital Brewer Control, Nothing Brews Like a BUNN, Pouring Profits, Signature Series, Tea At Its Best, The Horizontal Red Line, Ultra are either trademarks or registered trademarks of Bunn-O-Matic Corporation.

USER NOTICES

The notices on this dispenser should be kept in good condition. Replace unreadable or damaged labels.

(ILLUSTRATED DECALS WITH PART NUMBERS)

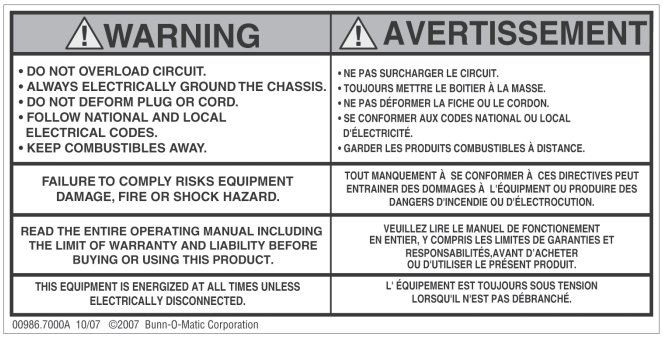

00986.7000 (CANADA)



00986.0000 (USA)



00656.7000 (CANADA)

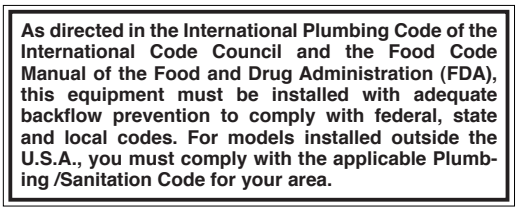

00656.0001 (USA)



37881.7000 (CANADA)



IMIX-3 CANADA (Portion Control)
28328.7013



IMIX-3 USA (Portion Control)
28328.0013



IMIX-5 CANADA (Portion Control)
28328.0016



IMIX-5 USA (Portion Control)
28328.0015

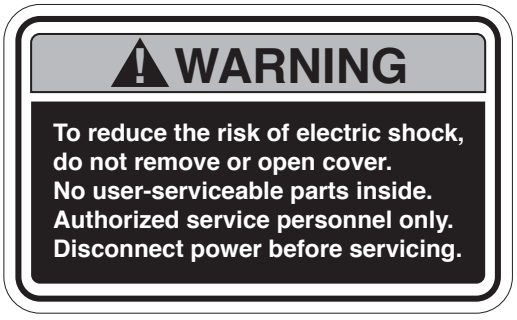

37881.0000 (USA)



00824.0002
(CDA/USA)

INITIAL SET-UP

1. Apply the four non-skid pads from the parts box to the bottom of the legs.
2. Remove the drip tray assembly, drip tray bracket, and splash panel assembly from the parts box.
3. Place a set of key holes in the drip tray bracket over the lower two screws in the panel below the hopper access door; push down gently and tighten screws.
4. Place the set of key holes in the splash panel over the upper two screws and position so the screws are between the holes.
5. Apply the applicable flavour labels below the dispense buttons on the corresponding dispense position. The spare labels can be used to label the hoppers and/or the panel behind them to ensure consistent placement.

   The dispenser has been factory set for the following configuration (as viewed when facing unit, from left to right);

Model	Head 1	Head 2	Head 3	Head 4	Head 5
iMIX-3	French Vanilla	Hot Chocolate	English Toffee	N/A	N/A
iMIX-5	French Vanilla	Hot Chocolate	English Toffee	Apple Cider	White Hot Chocolate

ELECTRICAL REQUIREMENTS

CAUTION - The dispenser must be disconnected from the power source until specified in Electrical Hook-Up.

The 120 volt, 15 amp version of this dispenser has an attached cordset. The mating connector must be a NEMA 5-15R.



5-15R

The 120 volt, 20 amp version of this dispenser has an attached cordset. The mating connector must be a NEMA 5-20R.



5-20R

Electrical Hook-Up

CAUTION - Improper electrical installation will damage electronic components.

1. An electrician must provide electrical service as specified.
2. Using a voltmeter, check the voltage and color coding of each conductor at the electrical source.
3. Place the ON/OFF/NIGHT switch in the “ON” position.
4. Connect the dispenser to the power source.
5. If plumbing is to be hooked up later be sure the dispenser is disconnected from the power source. If plumbing has been hooked up, the dispenser is ready for Initial Fill & Heat.

PLUMBING REQUIREMENTS

This dispenser must be connected to a **cold water** system with operating pressure between 20 and 90 psi from a 1/2" or larger supply line. A shut-off valve should be installed in the line before the dispenser. Install a regulator in the line when pressure is greater than 90 psi to reduce it to 50 psi. The water inlet fitting is 1/4" flare.

NOTE - Bunn-O-Matic recommends 1/4" copper tubing for installations of less than 25 feet and 3/8" for more than 25 feet from the 1/2" water supply line. At least 18 inches of a food grade, approved flexible beverage tubing, such as reinforced braided polyethylene or silicone, before the dispenser will facilitate movement to clean the countertop. Bunn-O-Matic does not recommend the use of a saddle valve to install the dispenser. The size and shape of the hole made in the supply line by this type of device may restrict water flow.

This equipment must be installed to comply with the National Plumbing Code of Canada and the Canadian Food Inspection Agency. For models installed outside Canada, you must comply with the applicable Plumbing/Sanitation Code for your area.

As directed in the International Plumbing Code of the International Code Council and the Food Code Manual of the Food and Drug Administration (FDA), this equipment must be installed with adequate backflow prevention to comply with federal, state and local codes. For models installed outside the U.S.A., you must comply with the applicable Plumbing /Sanitation Code for your area.

NOTE - If a backflow preventer is required by code, a shock arrestor should be installed between backflow preventer and dispenser. Installing the shock arrestor as close to the dispenser as possible will provide the best results. Water pipe connections and fixtures directly connected to a potable water supply shall be sized, installed and maintained in accordance with federal, provincial, state and local codes.

PLUMBING HOOK-UP

1. Flush the water line and securely attach it to the elbow fitting on the bottom of the dispenser.
2. Turn on the water supply.

OPERATING SWITCHES

The operating switches can be found behind the front door, adjacent to the right side mixing/whipping chambers.

1. **ON/OFF/NIGHT switch:**
   - **ON:** Enables all dispenser functions.
   - **OFF:** Disables all dispenser functions.
   - **NIGHT:** Disables display lighting and dispense switches. Tank refill and heating still functions.

2. **NORMAL/PROGRAM/RINSE switch:**
   - **NORMAL:** Allows all dispenser functions. Must be in this position for dispensing.
   - **PROGRAM:** Allows access to program menus using touch pad and LCD screen.
   - **RINSE:** Disables hopper motors. Pressing dispense button on front door will dispense dilution water and power whipper motor for ten seconds.

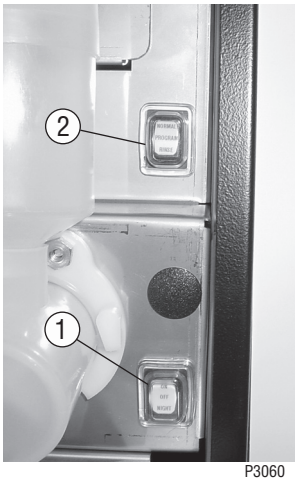

P3060

INITIAL FILL & HEAT

1. Turn on the water supply and connect the dispenser to the power source.
2. Water will automatically flow into the tank to the proper level and then shut-off. This will take less than ten minutes.
3. When the tank is full of water, open the front door and place the ON/OFF/NIGHT switch in the "ON" (upper) position. A tank full of cold water will take approximately eighty minutes for the water to heat on 120 volt

20 amp versions, and up to 2 hrs on 120 volt, 15A Canada versions. If a heating fault is indicated on the display, unplug the dispenser for 10 seconds and it will be cleared.

4. Fill the hopper(s) with the dry product to be dispensed as illustrated below.

LIQUID LEVEL CONTROL

The system automatically maintains the hot water tank's level by energizing the refill solenoid when the water level drops below the liquid level probe. If the system has not successfully refilled in 10 minutes, a refill error occurs. When a refill error occurs, the refill solenoid is de-energized. Once the cause of the refill error has been investigated and cured, the system can be reset by either disconnecting (for at least 5 seconds) and then reconnecting the power to the machine, or by entering one of the program modes (see Programming Modes.)

RUNNING A RINSE SEQUENCE

1. Place the Normal/Program/Rinse switch (page 6) in the "rinse" position.
2. Sequentially at each position, press any one of the dispense switches. The dispenser will run for 10 seconds with the hopper(s) disabled.
3. As each position is rinsed, the LCD display will show which position is being rinsed and count down from 10 seconds.
4. After all positions have been rinsed, return the Normal/Program/Rinse switch to the "Normal" position.

DISPENSER USE

1. Simply place a cup on the drip tray beneath the desired dispensing tip.
2. **To Dispense a beverage**, select the appropriate button for the cup size under the dispense tip, press momentarily, then release. **On USA models only**, the "+" button can be used as a Push-and-hold dispense to a minimum of 1 oz. Release when you reach approximately 2/3 of the desired volume.
   To dispense a Mocha beverage (approximately 40% of non-Mocha dispense volume), momentarily depress the Mocha button located below the LCD screen. Press the applicable dispense switch within 5 seconds of pressing the Mocha button or the feature will time out.
3. Let the mixing chamber completely drain before removing cup.

CANADA MODELS

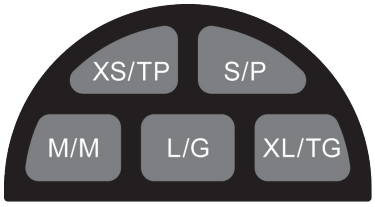

USA MODELS

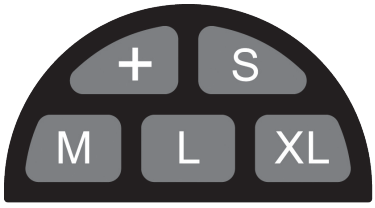

APPROXIMATE DISPENSE TIMES IN SECONDS (FACTORY SETTINGS)

(See Programming Modes on Pages 10-15)

CANADA / (USA)		HEAD 1 French Vanilla	HEAD 2 Hot Chocolate	HEAD 3 English Toffee	HEAD 4 Apple Cider	HEAD 5 White Hot Choc.
XS/TP	(+)	6.6 (1.0)	7.0 (1.0)	6.5 (1.0)	7.2 (1.0)	6.3 (1.0)
S/P	(S)	7.6	8.6	7.8	9.0	7.8
M/M	(M)	10.7	12.2	11.0	12.5	11.2
L/G	(L)	13.7	16.5	14.2	16.5	14.0
XL/TG	(XL)	16.3	19.5	17.0	19.9	17.4
Mocha %		40%	40%	40%	40%	40%

CLEANING

The use of a damp cloth rinsed in any mild, non-abrasive, liquid detergent is recommended for cleaning all surfaces on Bunn-O-Matic equipment. Do **NOT** clean this equipment with a water jet device.

1 x 24h / 1 aux 24 h

BUNN®

1. Rinse out Whipper Chambers by placing RINSE/RUN switch in the "RINSE" position and activating DISPENSE switches.
2. Turn elbow up, remove Hoppers, refill with product and replace hoppers into dispenser.
3. Empty Drip Tray and wash in a solution of dish detergent.

1. Rincez le compartiment de fouettement en plaçant l'interrupteur de RINÇAGE/DISTRIBUTION à la position RINÇAGE et actionnez les touches de distribution.
2. Tournez le coude vers le haut, retirez les trémies, remplissez de produit et remettez les trémies en place.
3. Videz le plateau perforé et lavez-le à l'aide d'un détergent à vaisselle.

7 **1 x 7d / 1 aux 7 j**

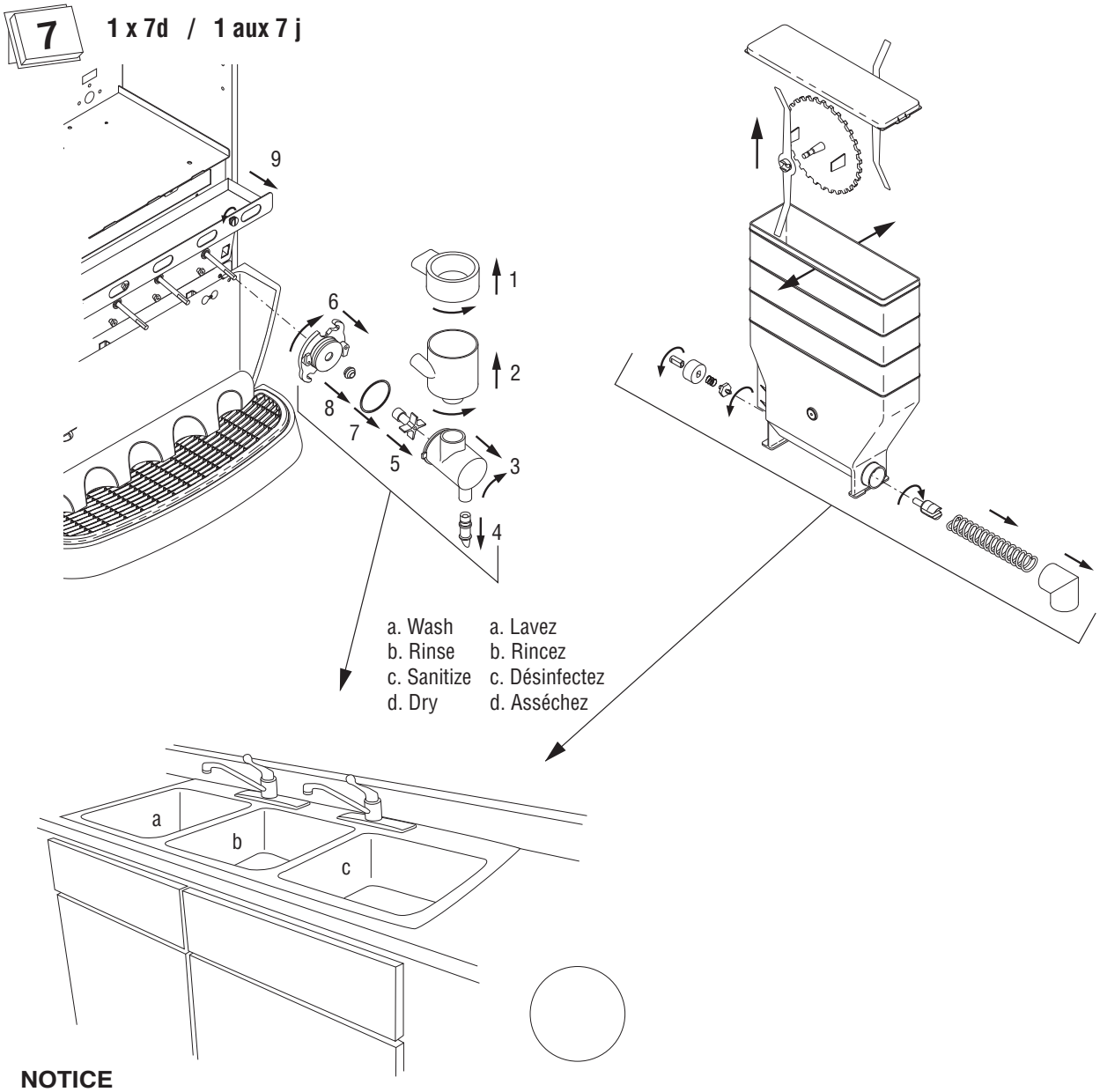

a. Wash
b. Rinse
c. Sanitize
d. Dry

a. Lavez
b. Rincez
c. Désinfectez
d. Asséchez

NOTICE

The cleaning instructions noted above are for non-dairy sugar based food products. When dispensing any other food product, the cleaning cycle for the whipping chamber assembly and ejector elbow must be performed daily.

NOTE:

Ces instructions de nettoyage sont réservées aux produits non laitiers à base de sucre. Pour tout autre type de produit, le nettoyage du compartiment de fouettement et du coude éjecteur doit être effectué quotidiennement.

37254.7000A 01/07 © 2004 BUNN-O-MATIC CORPORATION

HOPPER DISPENSE RATE OF PRODUCT

The hopper dispense rates are preset at the factory to deliver a ratio of 7.0 grams of powder for every 1 oz of water. Factory setting of the water dispense rate is 0.9 oz per second.

HOPPER LEVEL SENSOR CALIBRATION

The dispenser is equipped with sensors to detect a low level in each hopper. When low powder lockout is enabled, dispensing will be disabled when a low powder condition is detected in a hopper. The LCD screen on the door will also display a low level condition.

The despenser is shipped from the factory with the low level powder lock enabled. To disable or enable the lock, place the "NORMAL/PROGRAM/RINSE" switch (page 11) in the "PROGRAM" position. Press button A (page 10) below the BUNN logo on the front of the door. Continue to press this button until the "LOCKS/DISABLES?" menu is reached. Press button B (page 10} for "YES", then press it again in the "LOW POWDER LOCK?" menu. The low powder lockout is now enabled. Press button C (page 10) to exit the program menus, then return the "NORMAL/PROGRAM/RINSE" button to the "NORMAL" position. To disable the low powder lockout, repeat the process, and press button D (page 10) for "NO", in the "LOW POWDER LOCK" menu.

The low level sensors are factory calibrated for most products. If calibration is required for proper operation, the sensors can be recalibrated to the current product.

The hopper must be at least half full of product for calibration. Place the "NORMAL/PROGRAM/RINSE" switch in the "PROGRAM" position. Using button A (page 10), forward until the "CALIBRATION?" menu is reached. Press button B (page 10) for "YES", then press button A (page 10) until "CAL HOPPER 1?" screen is reached. Continue to press button A until the hopper to be calibrated is reached.

To calibrate the hopper, press button B (page 10) to indicate "YES" in the "CAL HOPPER#? screen. The screen will then ask you if the hopper is full. Press the button again to indicate "YES". The calibration will then take a few moments, then the screen will display "POWDER LEVEL RESET COMPLETE". The next hopper may be calibrated by moving forward in the menu, or press button C (page 10) to exit.

DRAINING THE HOT WATER TANK

CAUTION - The dispenser must be disconnected from the power source throughout these steps

1. Disconnect the dispenser from the power source.
2. Open front door and place ON/OFF/NIGHT switch in the "OFF" (center) position and let the water in the tank cool before draining.
3. Shut off and disconnect the incoming water supply.
4. Remove the drip tray and access panels below the door.
5. Pull the clamped end of the silicone tube out of the dispenser and direct it into a drain or a container large enough to hold the volume of water in the tank (7.3 gal for iMIX-4/5 and 4.4 gal for iMIX-3).
6. Make certain the shut off clamp is locked tightly on the tube, then remove the snap type clamp and plug from end of tube.
7. Carefully release the shut off clamp to let the water drain from the tank.

NOTE - The dispenser must be refilled using the INITIAL FILL & HEAT steps before reconnecting to the power source.

PREVENTIVE MAINTENANCE

Bunn-O-Matic® Corporation recommends that preventive maintenance be performed at regular intervals.
For Technical Service, contact Bunn-O-Matic® Corporation at 1-800-263-2256 in Canada or 1-800-286-6070 in the USA.
NOTE: Replacement parts or service caused by failure to perform required maintenance is not covered by warranty.

Cycle (Months)	Item	Canadian Part Number	US Part Number
6	Mixing Chamber Kit	32906.7001 (iMIX3) 32906.7005 (iMIX5)	32906.0001 (iMIX3) 32906.0005 (iMIX5)
3 or as needed	Whipper Shaft Seal	26356.1000 (6 pcs.) 26356.7999 (12 pcs.)	26356.1000 (6 pcs.)

GLOSSARY

TANK TEMP 190° (-) EXIT (+)	Adjust tank temperature (190° F maximum)
READY TEMP 170° (-) EXIT (+)	Adjust minimum tank ready temperature for lockout (188° maximum)
SET CUP SIZE EXMPL TIME	Select setting cup size by Time (seconds) or by Example (Portion Control models only)
DISPENSE TO ADD REPEAT SAVE	Press same dispense button to top off cup, or press save to lock in dispense time, or, press repeat to erase dispense time and repeat process.
DRINK STRENGTH (-) XX (+)	Adjust hopper motor speed for station selected
XX° CAL → XX° (-) Tank Temp (+)	Calibrate temperature probe
235 REFILL 155 (-) EXIT (+)	Set refill probe threshold
CAL WATER ? PRESS DISPENSE	Calibrates dilution water flow rate in station selected
CAL POWDER ? PRESS DISPENSE	Calibrates powder dispense rate for hopper in station selected
Auger Delay (-) .XX sec (+)	Set delay start of hopper after dilution valve opens in station selected
CAL HOPPER ? NO YES	Calibrates hopper level sensor in station selected Hopper must be at least half full to calibrate
LOW POWDER LOCK ? NO EXIT YES	Enables lockout of dispensing when low hopper level is detected
DISPENSE LOCKOUT NO EXIT YES	Enables lockout of dispensing if below minimum water temperature
RINSE ALARM ? NO EXIT YES	Enables rinse alarm
HEAD 1 DISABLE ? NO EXIT YES	Disables all functions and dispensing for station selected

SET PASSWORD ? (-) XXXX (+)	Allows password to be set to prevent altering setup functions
AUDIBLE ALARM ? NO EXIT YES	Turns on audio alarm
DISABLE MESSAGES ? NO EXIT YES	Disables function that displays fault messages on LCD door display
ENABLE ADS ? NO EXIT YES	Enables “ADS” to be displayed on LCD door display
ENTER ASSET # ? EXIT YES	Enter asset number of machine
ENABLE SERVICE # NO EXIT YES	Enables service agent telephone number to be displayed
TEST SWITCHES ? Use Switch To Test	Allows testing of dispense switches
TEST HEATER ? EXIT YES	Allows manually activating tank heater
TEST REFILL ? EXIT YES	Allows manually activating refill valve
TEST HOT WATER ? EXIT YES	Allows manually activating hot water valve (optional)
TEST AUGERS ? DISPENSE TO TEST	Allows manually activating hopper motors
TEST DISP HEADS DISPENSE TO TEST	Allows manually activating dispense valves & whipper motors
DISPLAY USAGE ? EXIT YES	Displays amount dispensed
FACTORY DEFAULTS NO YES	Resets all functions to factory defaults, and password to 0

PROGRAMMING THE DISPENSER

The following function screens are in order of appearance. Each screen will have instructions on how to access, and the procedures to program the various functions of the dispenser. To enable programming, place the “NORMAL/PROGRAM/RINSE” switch in the “PROGRAM” position.

IMPORTANT PROGRAMMING NOTES - READ CAREFULLY

To exit the programming mode at any time, press and release the exit (center) pad located on the front switch panel. The display will return to the **PROGRAM HOME SCREEN**.

If none of the five programming switches are pressed within 90 seconds during the setup of the dispenser, the programming of the function screen that is being set will be exited and the display will return to the **PROGRAM HOME SCREEN**.

PROGRAM HOME SCREEN



P3057

The screen above will be shown when the dispenser is ready for use. While the tank is heating, the water temperature will be displayed until the ready temperature is reached.

PROGRAMMING SWITCHES

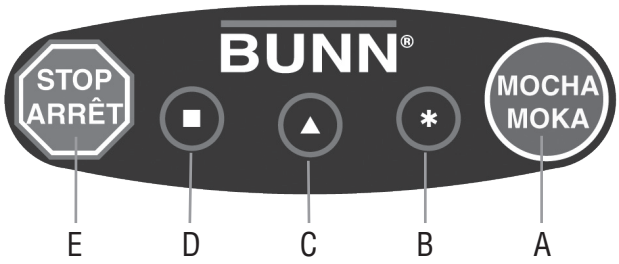

CANADA MODELS

A. Enter program mode and advance to next menu
B. Increment display value positive
C. Exit program mode
D. Increment display value negative
E. Return to previous menu

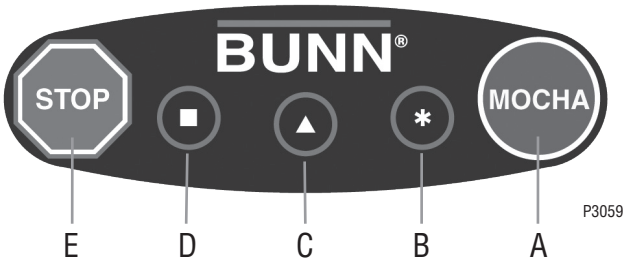

P3059

USA MODELS

A. Enter program mode and advance to next menu
B. Increment display value positive
C. Exit program mode
D. Increment display value negative
E. Return to previous menu and interrupt dispense

Using the menu-driven display (MAIN SCREEN) on the front of dispenser, the operator has the ability to alter or modify various functions of the dispenser. This allows for precise dispensing of various flavors of powdered products.

Programming of dispenser is achieved by entering a certain function, then, by use of programming switches, the operator can customize the dispensing process to their specifications.

To access the programming mode, and to scroll through different function screens, the programming switches shown are used. There are five of switches that will be used for setup of the dispenser.

PROGRAMMING CUP SIZES - Portion Control Models

The cup size can be programmed in portion control models by “EXAMPLE” or “TIME”. Programming by EXAMPLE is manually pressing desired dispense button, then releasing when the desired cup size is attained. The time required to fill the cup will be stored in the controller memory when moving to the next menu. Programming by TIME is setting the actual dispense time in seconds for each cup size desired.

Place the “NORMAL/PROGRAM/RINSE” switch in the “PROGRAM” position. Press button A (page 10) below the BUNN logo on front of the door until the “SET CUP SIZE” menu is reached. (Refer to menu J, page 14) Press button D (page 10) to select programming by “EXAMPLE”. Place proper cup under dispense tip for station you desire to set. Press desired dispense button, then release when the cup is 3/4 full. If cup is not full enough, the dispense button can be pressed again to add additional beverage to the cup. If cup has reached desired level, press button B under “SAVE” to record the dispense time. If cup is overfilled, press button D under “REPEAT”. Empty cup and repeat the process.

If setting cup sizes by “TIME” is desired, press button B under “TIME” in the “SET CUP SIZE” menu. “HEAD 1 XS TIME” will be displayed, along with current time setting. Pressing either button D below (-) or button B below (+) will subtract or add time in .1 second increments. Minimum adjustment is 1.0 seconds. Each one second of time equals approximately 1.00 to 1.25 ounces of beverage at factory settings. When desired time is set, press button A to continue to next cup size. **On USA models**, the XS dispense times are factory set for 1.0 seconds. When depressed, the XS buttons will allow push and hold dispensing to the desired volume.

When the desired cup sizes have been programmed, press button C to exit program menus, or press button A to move to the next menu. If button C was selected to exit the program mode, return the “NORMAL/PROGRAM/RINSE” switch to the “NORMAL” position to return to nomal operation.

PROGRAMMING - Language Selection

INSTRUCTIONS

1. To enable language selection programming, place the “NORMAL/PROGRAM/RINSE” switch in the “PROGRAM” position.
2. Depress and hold the "MOCHA/MOKA" switch for approximately 10 seconds until "SELECT LANGUAGE" is displayed.
3. Press the "B" or "D" button below the language you wish to select.
4. Exit "LANGUAGE SELECTION" and return to the main programming menu by depressing button "C".



A. Enter program mode and advance to next menu
B. Increment display value positive
C. Exit program mode
D. Increment display value negative
E. Return to previous menu

PROGRAMMING THE DISPENSER (cont.)

Press and release right switch (advance to next menu), “TANK TEMP XXX°” appears on screen.

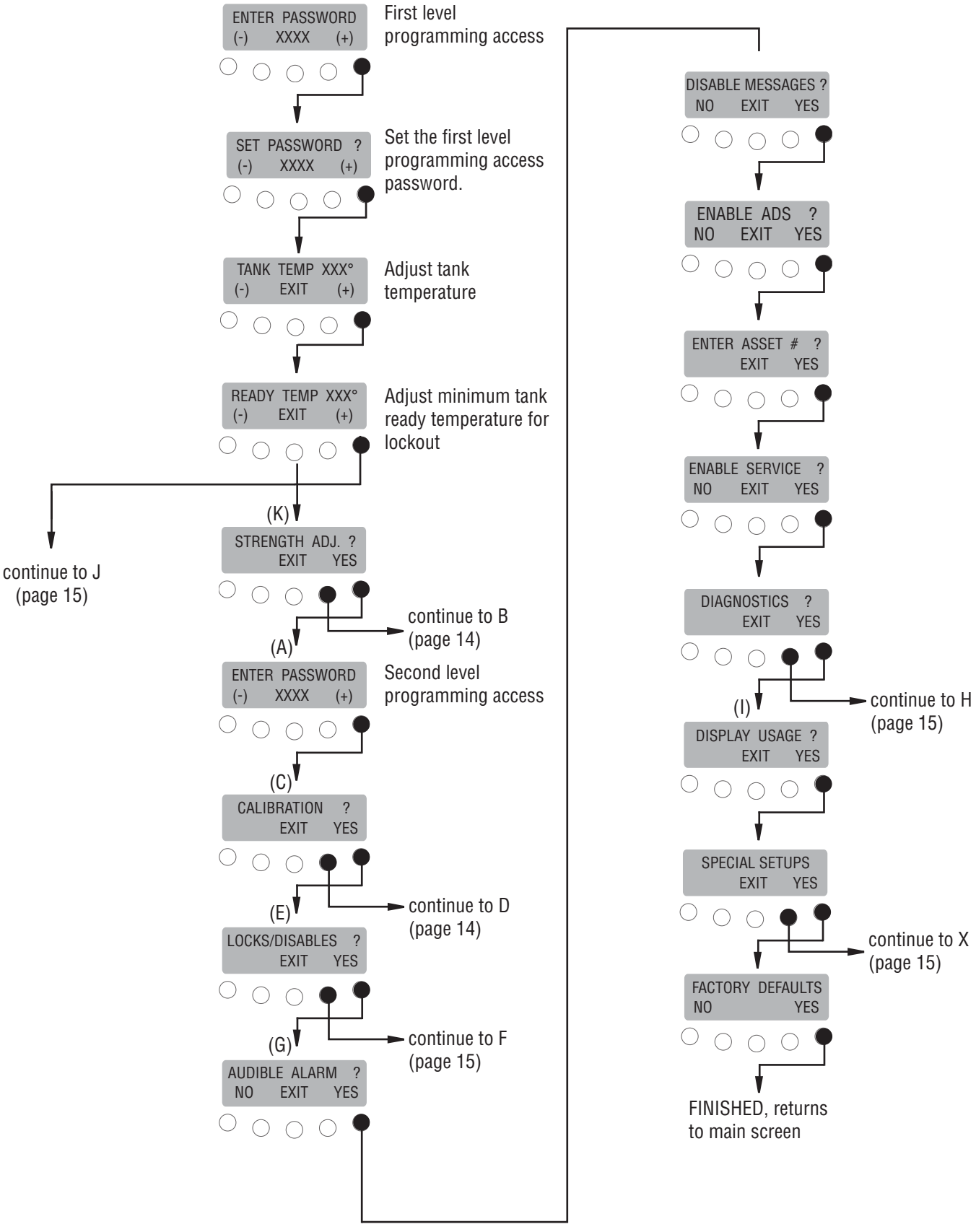

PROGRAMMING THE DISPENSER (cont.)

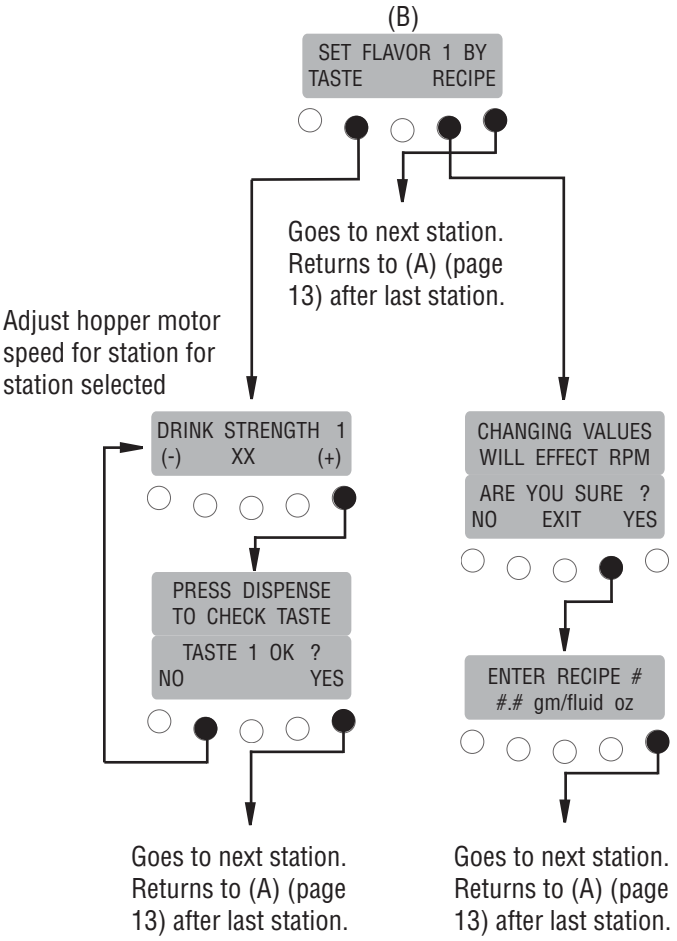

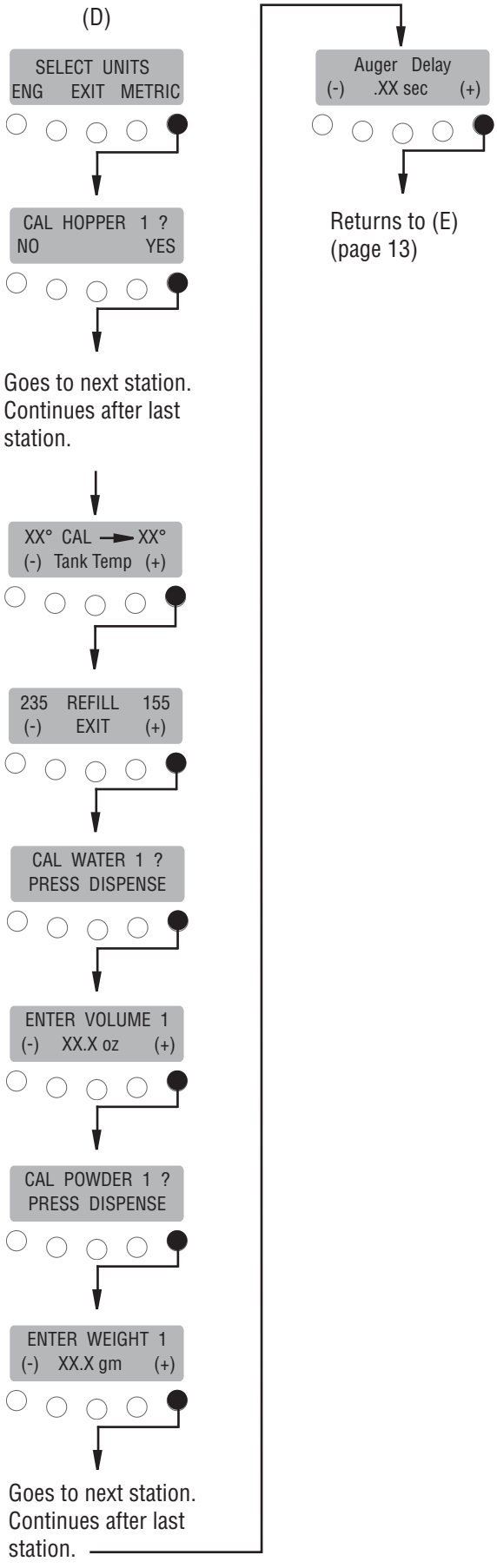

PROGRAMMING THE DISPENSER (cont.)

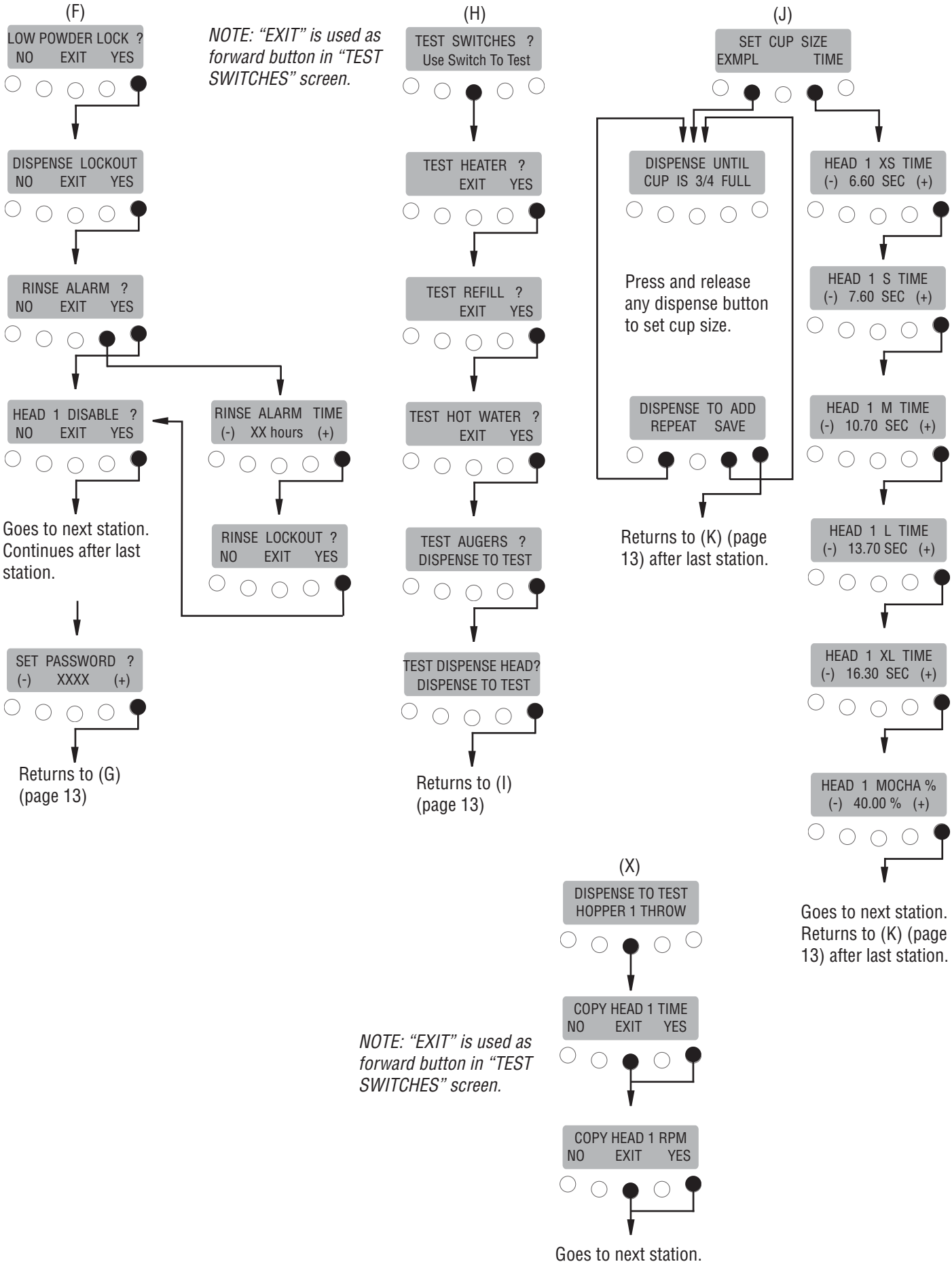

iMIX 8 LB. HOPPER ASSY

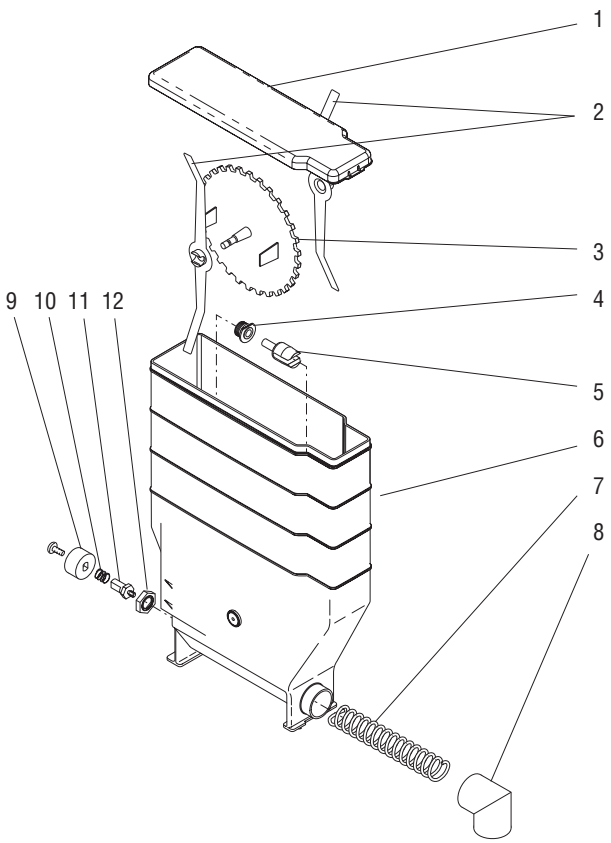

ITEM	PART NO.	DESCRIPTION
1	36653.0001	Lid, Hopper
2	32337.0000	Mixing Blade
3	32386.0001	Disk, Agitator (30 Tooth)
4	28067.0000	Bushing, Auger Drive Shaft
5	26940.0002	Shaft, Auger Drive
6	37011.0001	Hopper
7	39442.0000	Auger, Wire
8	25903.0000	Elbow, Ejector
9	36770.0000	Coupling, Auger Drive
	01326.0002	Screw, Truss Head #10-32 x .25”
10	36774.0000	Spring, Hopper Coupling
11	37539.1000	Shaft, Auger Drive
12	25743.0000	Locknut
Not Illustrated		
-	37010.1001	Hopper Assy, Complete (Includes one each of items 1-12)

MIXING/WHIPPER CHAMBERS

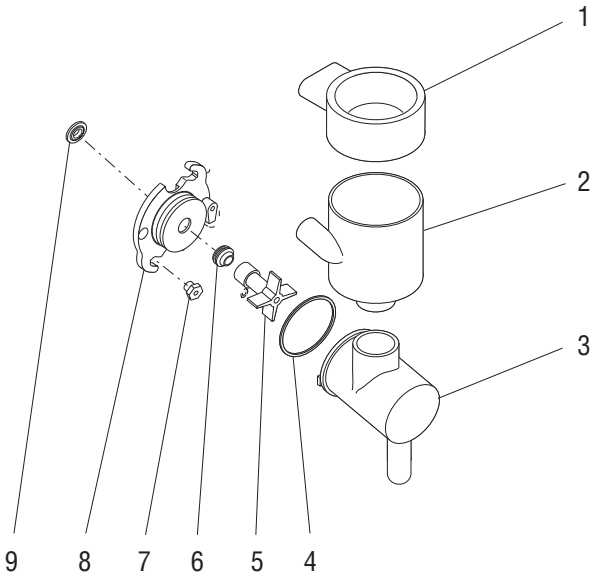

ITEM	PART NO.	DESCRIPTION
1	25732.0000	Steam Collector
2	25733.0003	Mixing Chamber
3	25734.0002	Whipper Chamber
4	24733.0010	O-Ring
5	25902.0000	Frother
6	26356.1000	Kit, Shaft Seal (Includes 6 Seals)
	26356.7999	Kit, Shaft Seal (Includes 12 Seals)
7	28865.0000	Nut, Whipper Motor/Receptacle Mounting
8	28866.0000	Receptacle, Whipper Chamber
9	28867.0000	Slinger
Not Illustrated		
-	32906.7001	iMIX-3 Preventive Maintenance Kit (Includes 3 each of items 4, 5, 6 & 9)
-	32906.7005	iMIX-5 Preventive Maintenance Kit (Includes 5 each of items 4, 5, 6 & 9)