BE2136
CONVEYOR OVEN
INSTALLATION – OPERATION – MAINTENANCE

BLODGETT / A MIDDLEBY COMPANY

www.blodgettcorp.com
1400 Toastmaster Drive, Elgin, IL 60120 USA Telephone (847) 741-3300, Fax: (847) 741-4406

PN 58364 (09/08) Rev. B
G.S. Blodgett Corporation

IMPORTANT

WARNING: IMPROPER INSTALLATION, ADJUSTMENT, ALTERATION, SERVICE OR MAINTENANCE CAN CAUSE PROPERTY DAMAGE, INJURY OR DEATH. READ THE INSTALLATION, OPERATING AND MAINTENANCE INSTRUCTIONS THOROUGHLY BEFORE INSTALLING OR SERVICING THIS EQUIPMENT

FOR YOUR SAFETY

Do not store or use gasoline or other flammable vapors or liquids in the vicinity of this or any other appliance.

The information contained in this manual is important for the proper installation, use, and maintenance of this oven. Adherence to these procedures and instructions will result in satisfactory baking results and long, trouble free service. Please read thismanual carefully and retain it for future reference.

Errors: Descriptive, typographic or pictorial errors are subject to correction. Specifications are subject to change without notice.

BLODGETT®

THE REPUTATION YOU CAN COUNT ON

For over a century and a half, The Blodgett Oven Company has been building ovens and nothing but ovens. We've set the industry's quality standard for all kinds of ovens for every foodservice operation regardless of size, application or budget. In fact, no one offers more models, sizes, and oven applications than Blodgett; gas and electric, full-size, half-size, countertop and deck, convection, Cook'n Hold, Combi-Ovens and the industry's highest quality Pizza Oven line. For more information on the full line of Blodgett ovens contact your Blodgett representative.

Your Service Agency's Address:

Model:

Serial Number:

Your oven was installed by:

Your oven's installation was checked by:

TABLE OF CONTENTS

Page

SECTION 1
I. MODEL IDENTIFICATION 1
SERIES BE2136 ELECTRICAL SPECIFICATIONS 2
II. PRINCIPLE OF AIR FLOW 3
A. Heat Transfer and How It Works 3
II. PRINCIPLE OF AIR FLOW (Continued) 4
B. Air Fingers 4
III. COMPONENT FUNCTION 5
A. Conveyor Motor and Conveyor Belt 6
B. Blower Fan 6
C. Electric Heaters 6
D. Window 6
E. Cooling Fan 7
F. Air Fingers and Blank Plates - See Figure 1-9 8
SECTION 2
I. UNLOADING 9
BE2136 OVEN INSTALLATION
REQUIRED KITS AND EQUIPMENT 10
PARTS LIST FOR SERIES BE2136 ELECTRIC OVEN
INSTALLATION KIT 11
PARTS LIST FOR BE2136 SERIES SINGLE OVEN
OPTION - BASE W/15" LEGS & TOP P/N 34832 12
PARTS LIST FOR BE2136 SERIES DOUBLE OVEN
OPTION - BASE W/6" LEGS,
CASTERS & TOP P/N 34833 13
PARTS LIST FOR BE2136 SERIES TRIPLE OVEN
OPTION - BASE w/OUTRIGGERS & TOP
P/N 34831 14
RESTRAINT CABLE INSTALLATION 14
UTILITY ROUGH-IN DIMENSIONS AND POSITIONING
FOR BE2136-SERIES OVENS 15
CIRCUIT BREAKER 15
ELECTRICAL SPECIFICATIONS 15
ELECTRICAL RATING 15
SUPPLY WIRE 15
SUGGESTED 15
II. VENTILATION GUIDELINES 16
VENTILATION HOOD 16
VENTILATION CAPTURE TEST 16
III. ELECTRICAL CONNECTION INFORMATION FOR
BE2136-SERIES OVENS. 17
IV. ELECTRIC SUPPLY FOR ELECTRIC-HEATED
OVENS 17
VI. CONVEYOR REAR STOP AND
END STOP INSTALLATION 18
SECTION 3 INSTALLATION
I. CONTROL FUNCTIONS 19
II. COMPONENT INFORMATION AND LOCATION 20
A. Door Safety Switch 20
B. Blower Switch 20
C. Heat Switch 20
D. Temperature Controller 20
E. Conveyor 21
MEASURING CONVEYOR SPEED. 21
III. STEP-BY-STEP OPERATION 22
A. Startup Procedures 22

TABLE OF CONTENTS (Continued)

Page

Daily Startup 22
Power Failure 22
B. Shutdown Procedure 22
A.Daily Startup Procedure 24
IV. NORMAL OPERATION - STEP-BY-STEP 24
V. QUICK REFERENCE: TROUBLESHOOTING 26

SECTION 4 MAINTENANCE
I. MAINTENANCE - DAILY 28
A. Exterior 28
B. Cooling Fan 28
C. Conveyor Belt 28
D. Crumb Pans 28
E. Window 28
II. MAINTENANCE - MONTHLY 29
A. Removing Conveyor From Oven For Cleaning 29
B. Air Fingers Disassembly For Cleaning 31
C. Cleaning the Window 32
D. Reassembly of Air Fingers 32
E. Reinstall End Plugs 35
F. Conveyor Reassembly Into Oven 36
G. Checking Conveyor Belt Tension 36
H. Conveyor Belt Link Removal 37
I. Replacing Conveyor Belt 38
J. Attaching Drive Chain 38
III. MAINTENANCE - EVERY 3 MONTHS 39
A. Cleaning the Blower/Fan Motor 39
B. Electrical Terminals 40
C. Ventilation 40
D. Checking the Blower/Fan Belt 40
E. Blower Fan Shaft Bearing Lubrication 41
F. Split-belt Conveyor Shaft Cleaning 41
IV. MAINTENANCE - EVERY 6 MONTHS 43
BE2136-SERIES ELECTRIC OVEN KEY SPARE
PARTS 44
KEY SPARE PARTS KIT 44
SECTION 5 TROUBLESHOOTING
Troubleshooting Charts 45
SECTION 6 - PARTS LIST
OVEN PANELS, WINDOW AND LEGS 49
CONTROL PANEL 51
BLOWER AND SHROUD 53
CONVEYOR 55
SPLIT BELT CONVEYOR 57
MACHINERY COMPARTMENT 59
SECTION 7 ELECTRICAL SCHEMATICS
Wiring Diagram, E208-240 50/60, 3PH 4W BE2136 61
Wiring Diagram, E380-480 50/60, 3PH 5W BE2136 62
Wiring Diagram, E380V 50/60, 3PH 5W BE2136 63

NOTE

Wiring Diagrams are in Section 7 of this Manual. The diagram for each oven is also on the lower inner surface of its Control Console.

NOTES

SECTION 1
DESCRIPTION

I. MODEL IDENTIFICATION

The Blodgett BE2136-Series may be used either as a single oven or stacked for use as double or triple ovens. The major difference between the oven models in this series is the width of the conveyor.

A single BE2136-Series Oven (Figure 1-1) is mounted on a base pad with legs and casters. A double oven (Figure 1-2) consists of two, *stacked,* single ovens. A triple oven (Figure 1-3) consists of three stacked single ovens. The lower oven is mounted on a base pad with short legs and casters.

On a double or triple oven, the ovens operate completely independent. All ovens use identical controls and components. One oven can be cleaned or serviced, while the others are operating.

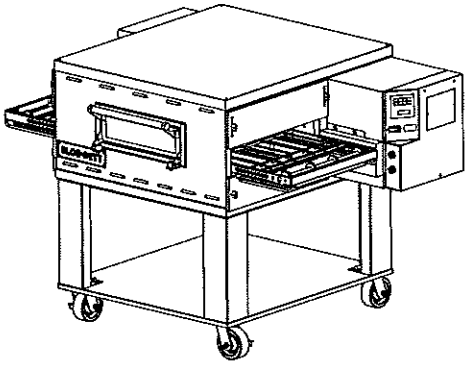

Figure 1-1. Single BE2136 Oven

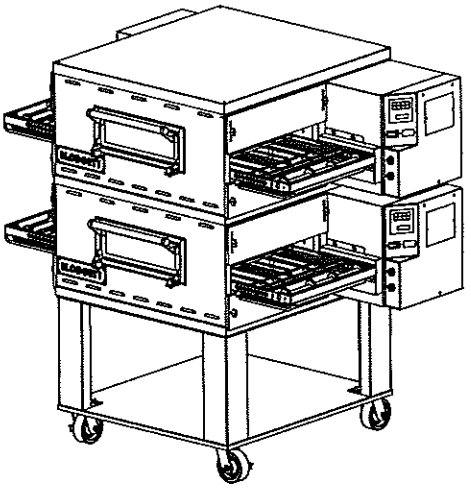

Figure 1-2. Double BE2136 Oven

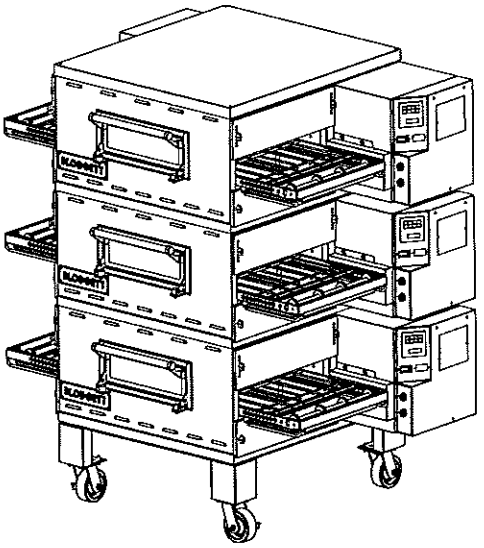

Figure 1-3. Triple BE2136 Oven

BE2136 SERIES OVEN SPECIFICATIONS

Table 1-1: Dimensions

Overall Height:	single oven with 17-1/2" (446mm) legs	43-1/2" (1105mm)
	double oven with standard 17-1/2" (446mm) legs	63" (1600mm)
	double oven with optional 20-1/2" (521mm) legs	66" (1676mm)
	double oven with optional 25-1/2" (648mm) legs	71" (1803mm)
	triple oven with 6" (152mm) legs	71" (1803mm)
Overall Depth:		46" (1168mm)
Overall Length:	with standard 60"/1524mm conveyor	61" (1549mm)
	with optional 56"/1422mm conveyor	57" (1447mm)
	with optional 76"/1930mm conveyor	77" (1956mm)
Baking Chamber Length		36" (914mm)
Conveyor Width:	Single Belt	20" (508mm)
	Split Belt	2 x 9-1/2" (241mm)
Conveyor Length		56" (1422mm) or 60" (1524mm) or 76" (1930mm)
Recommended Minimum Clearances:		
	Rear of oven to wall	3" (76mm)
	Control end of conveyor to wall	1" (25.4mm)
	Non-control end of oven to wall	1" (25.4mm)

Table 1-2: General specifications (per oven cavity)

Weight	400 lbs. (182kg)
Rated Heat Input:	17 kW/hr.
Maximum Operating Temperature	550°F (288°C)
Warmup Time	25 minutes

SERIES BE2136 ELECTRICAL SPECIFICATIONS

Main Blower & Elements Voltage	Control Circuit Voltage	Phase	Frequency	Amperage Draw	Poles	Wires
208-240V	208-240V	3 Ph	50/60 Hz	60 Amp	4 Pole	4 Wire (3 hot, 1 grd)

HEATER AMPERAGE

Voltage	kW	AMPERAGE L1	L2	L3
208	17	49.4	49.4	47.2
240	17	42.1	42.1	40.9

380-400V	208-240V	3 Ph	50/60 Hz	60 Amp	4 Pole	5 Wire (3 hot, 1neut, 1 grd)

HEATER AMPERAGE

Voltage	kW	L1	L2	L3	N
380-400	17-18.8	27.0-29.8	25.8-28.6	25.8-28.6	1.2

400V	208-240V	3 Ph	50/60 Hz	60 Amp	4 Pole	5 Wire (3 hot, 1neut, 1 grd)

HEATER AMPERAGE

Voltage	kW	L1	L2	L3	N
480	17	21.6	20.4	20.4	1.2

NOTE

Wiring Diagrams are contained in Section 7 of this Manual and are also located inside the oven at the bottom of the Control Panel

This Manual Must Be Kept For Future Reference

II. PRINCIPLE OF AIR FLOW

The fan-style blower draws air into the oven plenum where it is heated. The blower then pushes the hot air through the air fingers into the baking chamber. Each air finger contains an inner plate and outer plate that form the hot air into jets, distributing it across a conveyor belt on which the food product rides. Air is then pulled back into the blower and the process continues. The curving, black arrows of Figure 1-4 show this air flow.

A. Heat Transfer and How It Works

1. Heat constantly moves from a warm object to a cold object. Heat moves using three different paths: Conduction; Radiation; and Convection.

Conduction: This path utilizes surface-to-surface contact. The pizza dough in contact with the pan is a good example of conduction.

Radiation: This path has to do with objects radiating heat. Dark objects absorb heat whereas light or shiny objects reflect more heat. This is the reason that the inside of a BE2136-Series Oven is light in color: To reflect more heat back onto the food product.

Convection: This path has to do with moving a volume of air. It explains why hot air rises and cooler air replaces hot air. An industrial application of this principle is to incorporate a fan to force the hot air movement, which in turn increases the heat transfer to the food product.

Each BE2136-Series Oven has a large fan-style blower to move the hot air through the air fingers and onto the product to cook/bake the food product most efficiently.

2. Temperature is the intensity of heat at the point where it is sensed. As discussed above, heat flows by conduction, radiation and convection. The speed at which the heat flows is determined by the temperature difference between the oven and the food product. The larger the difference, the faster the heat flows to the item that is being baked.

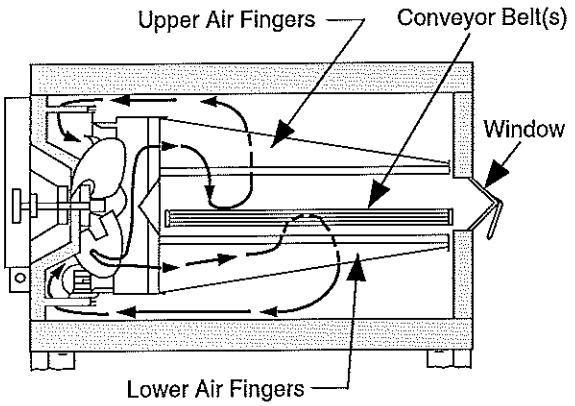

Figure 1-4. PS536ES-Series Oven Air Flow

II. PRINCIPLE OF AIR FLOW (Continued)

B. Air Fingers

The BE2136-Series Ovens are conveyorized ovens that employ vertical jets of hot air streaming from air fingers (Figure 1-5) to give uniform, intense heating. The vertical streams of hot air provide an exceptional heat transfer rate and generally bake faster and at lower temperatures than convection hot air or infrared heating ovens.

A BE2136-Series Oven can accommodate up to four bottom air fingers and four top air fingers. Some BE2136-Series ovens used to bake pizza have four bottom fingers and two top fingers. For special product baking requirements, a number of other styles of fingers and finger arrangements are available from the factory.

NOTE: *Some customers have a predetermined finger arrangement. If you have any questions pertaining to the finger arrangement, please call the factory.*

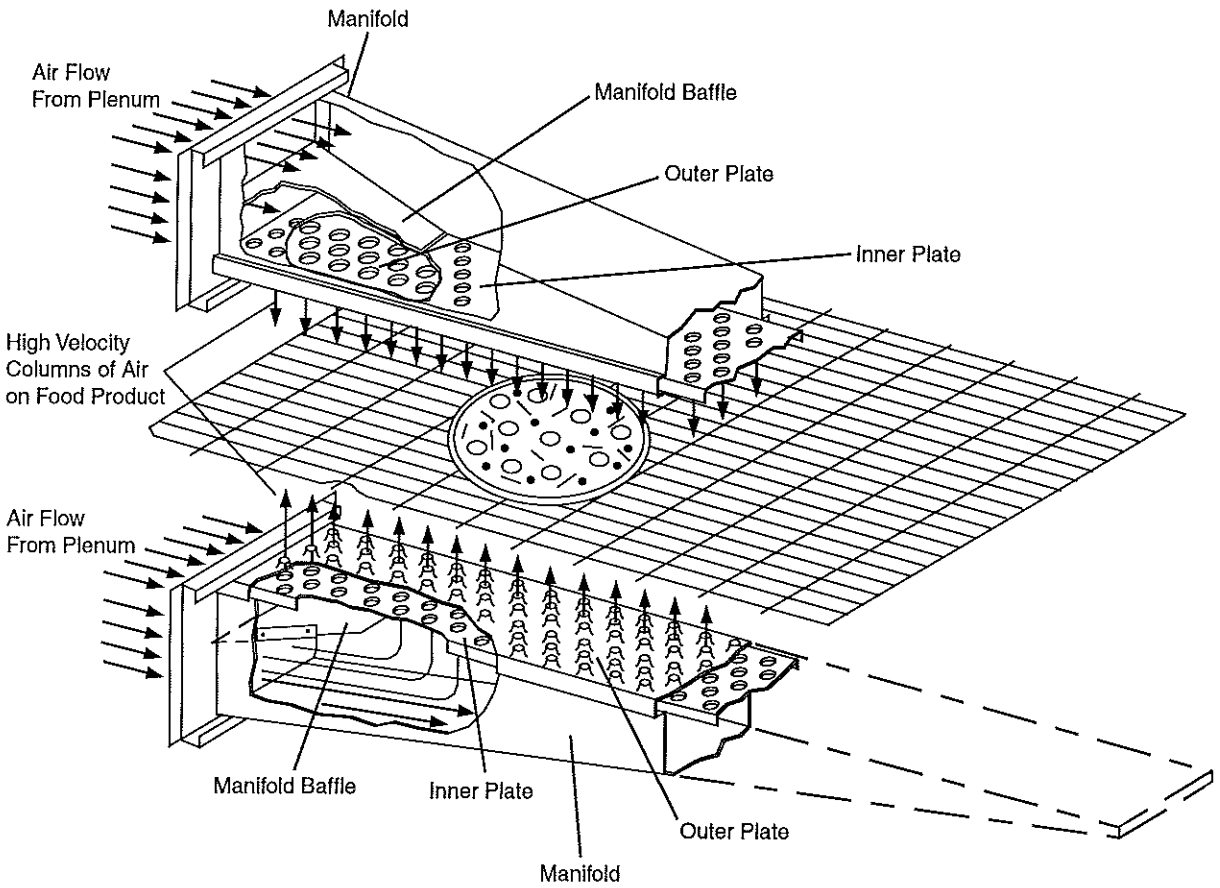

Figure 1-5. Air Fingers, Showing High-Velocity Columns of Air Formed During Passage Through the Inner Plate and Outer Plate to Heat the Food Product.

III. COMPONENT FUNCTION (Figure 1-6)

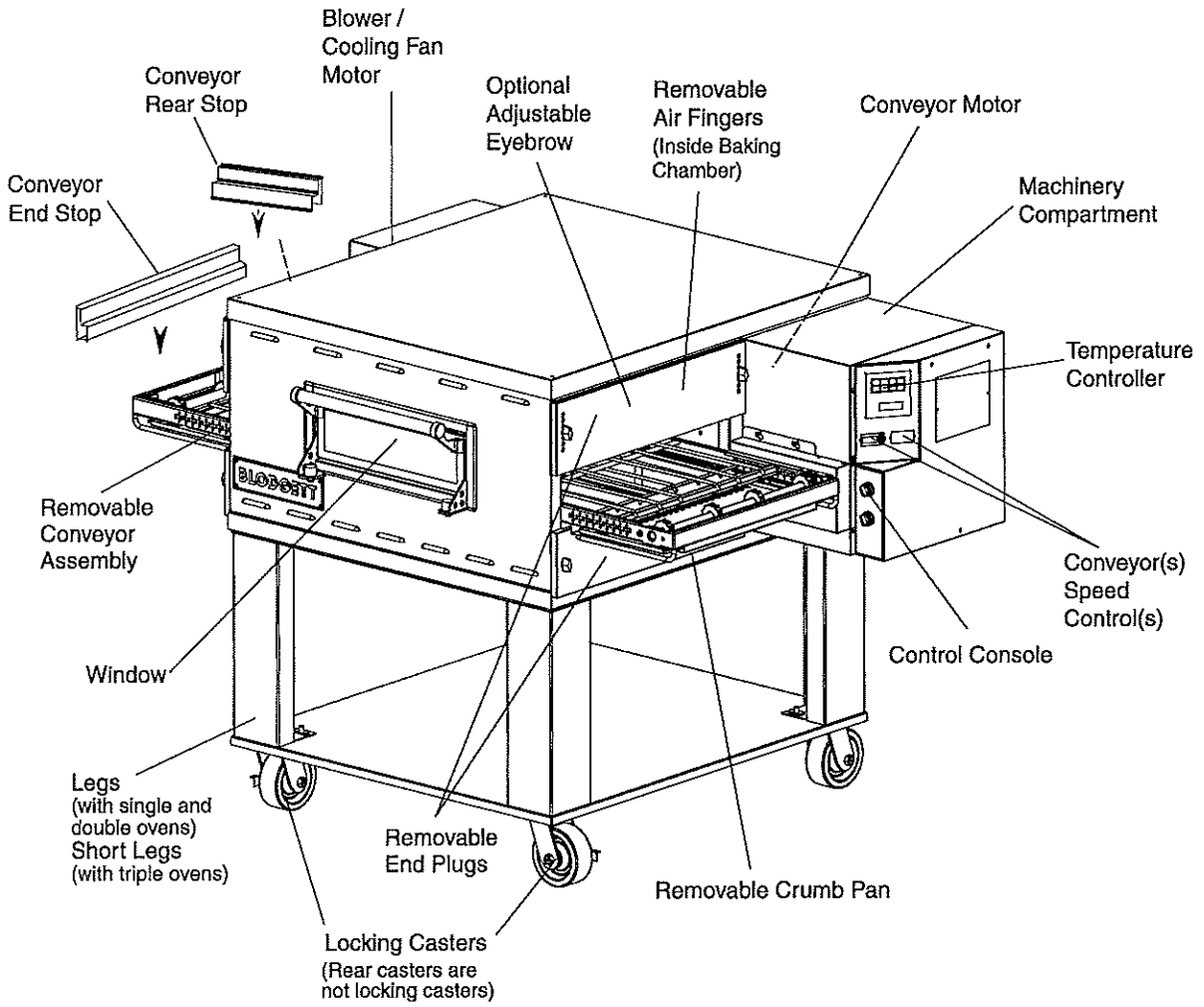

Figure 1-6. BE2136-Series Oven Components Locations

III. COMPONENT FUNCTION

A. Conveyor Motor and Conveyor Belt

The conveyor belt is driven by a variable-speed electric motor (Figure 1-7) operating through a gear reducer. The motor speed is controlled by a digital control. The stainless-steel wire belt can travel in either direction at variable rates ranging from 3 minutes to 30 minutes; this is the time that a product can take to pass through the oven.

B. Blower Fan

The blower fan is located at the rear of the oven. This blower forces heated air through the air fingers. The BLOWER/Heat switch must be set to "ON" or "I" for oven warmup and baking.

C. Electric Heaters

There is one heater element mounted on the inside of the left panel. The element is connected to an electrical control which is energized by the temperature controller.

If the pilot flame does not light or a loss of flame occurs, the main gas valve closes.

The main burner gas is extinguished when the HEAT switch is set to "OFF" or "O".

D. Window

A window on the front of the oven permits viewing the items being baked and provides access to the oven for items that do not require full baking time, such as sandwiches, cookies, small items, or cheese-melting processes.

E. Cooling Fan — See Figure 1-8

The cooling fans are located in the back of the oven. These cooling fans draw air through its grille, blowing it through the blower motor compartment and the control compartment into the oven top and exhausted out the front louvers.

F. Air Fingers and Blank Plates - See Figure 1-9

F1. Air Fingers

An Air Finger Assembly is made up of three parts:

1. **Outer Plate** - The Outer Plate is the removable covering with tapered holes, which direct the air stream onto the product being baked.

2. **Inner Plate** - The perforated Inner Plate is vital in forming the unique air jets. It must be assembled into the manifold with its holes aligned with the holes of the outer plate.

3. **Manifold** - The Manifold is the assembly which slides on tracks into the oven plenum.

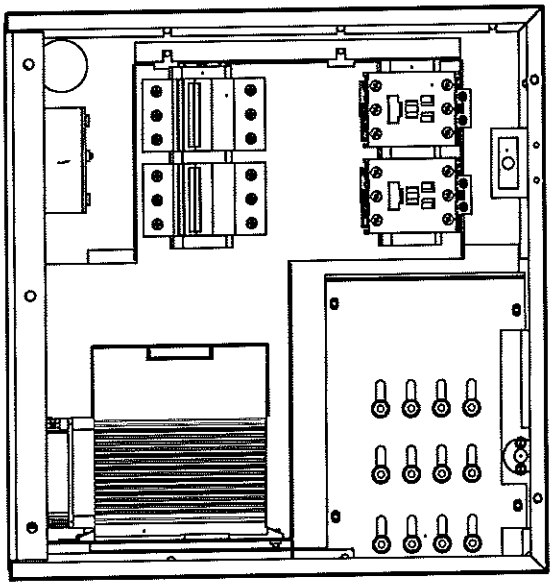

Left Control Box

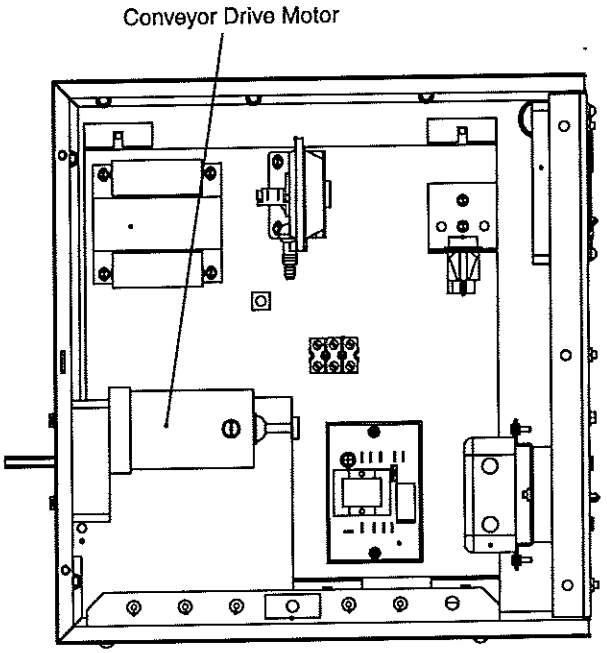

Right Control Box

Figure 1-7. Machinery Compartment Components

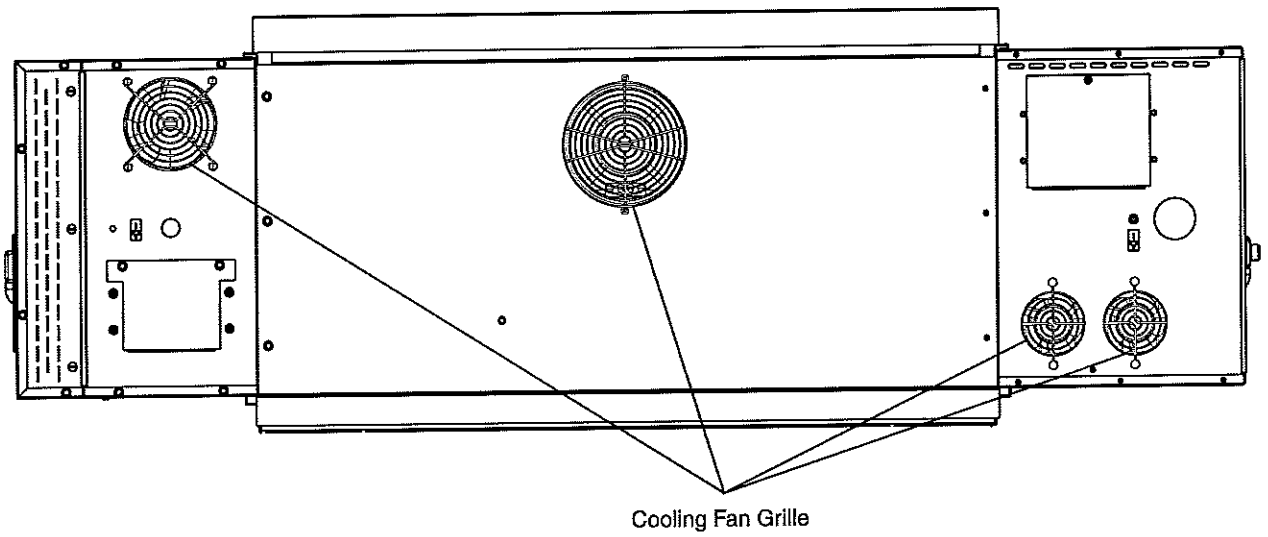

Figure 1-8. Cooling Fan

F2. Blank Plates

1. **Blank Plates-** The Blank Plates are available to install on the plenum where an air finger is not required.

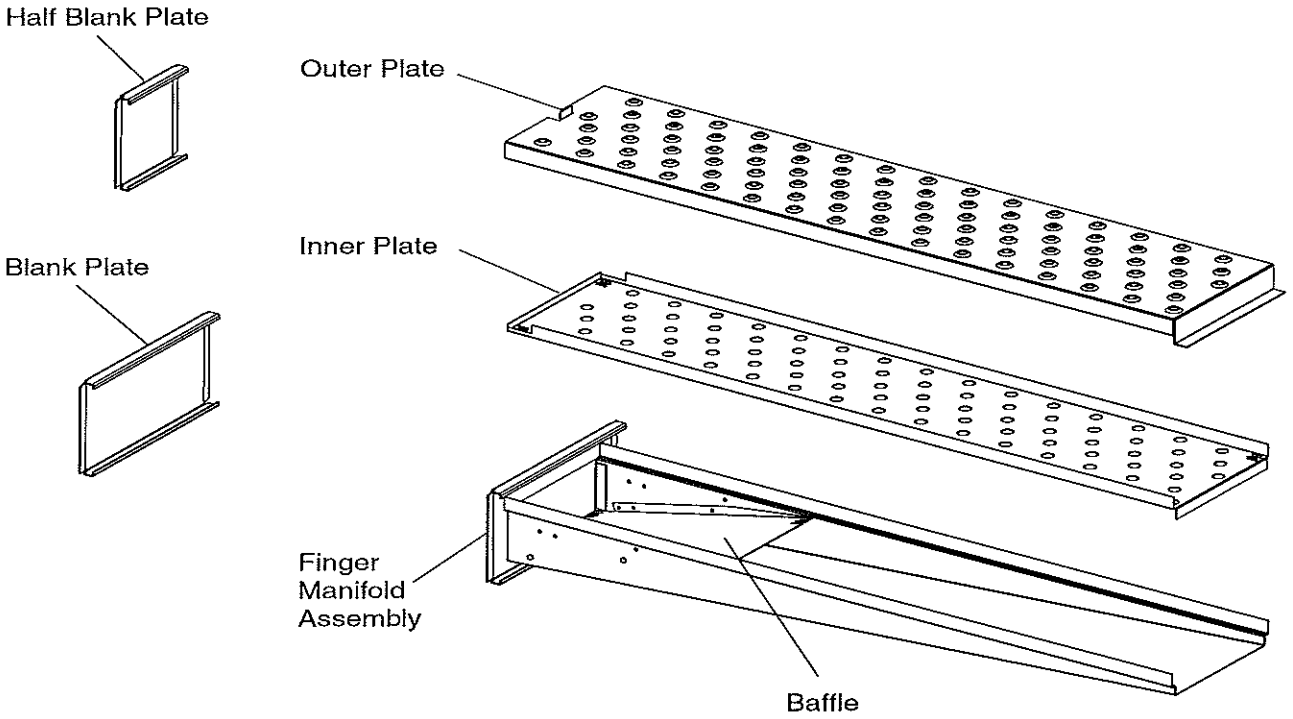

Figure 1-9. Blank Plates (two sizes) and an Air Finger.

SECTION 2
INSTALLATION

NOTE: The oven, when installed, must be electrically grounded in accordance with local codes, or in the absence of local codes, with the National Electrical Code (NEC), or ANSI/NFPA70.

NOTE

There must be adequate clearance between the oven and any adjacent combustible construction. Clearance must also be provided for servicing and for operation.

CAUTION

It is required that the oven be placed under a ventilation hood for adequate air supply and ventilation.

CAUTION

Do not obstruct the flow of combustion and ventilation air to and from your oven. Do not obstruct the ventilation holes in the Control Panel.

CAUTION

On ovens with the Machinery Drive Compartment located at the right end, a minimum clearance of 0″ to a left side wall, 18″ to a right side wall and 6″ from a back wall to air openings at the rear of the oven must be maintained. On ovens with the machinery/drive compartment located at the left end, a minimum clearance of 0″ to a right side wall, 18″ to a left side wall and 6″ from a back wall to air openings at the rear of the oven must be maintained.

For servicing and cleaning, a minimum of 18″ clearance from all walls is recommended.

I. UNLOADING

Your Blodgett BE2136-Series Oven is shipped partially assembled. It will arrive in a carton on a crate.

Carton size for a BE2136-Series Oven is:

58″ (2134mm) Long ×

47.25″ (1473mm) Wide ×

36″ (1118mm) High ×

The crate and carton must be examined before signing the Bill of Lading. Report any visible damage to the transport company, and check for the proper number of crates. If apparent damage is found, make arrangements to file a claim against the carrier. Surface Interstate Commerce Regulations (U.S.A.) require that the claim must be initiated by the consignee within 10 days from the date that the shipment is received.

A Pre-installation Procedures Manual (MM P/N 88910-0009) is attached to the exterior wall of the carton. This manual contains detailed instructions on unpacking and moving the oven(s) to the operating site. When the transport company notifies you of an impending delivery, arrange to have a forklift at your facility to unload the carton(s).

Instructions for stacking the ovens is continued in a separate manual used by Blodgett Authorized Installers.

If you have a door wider than the carton, simply move the carton into your facility and arrange an appointment with your Blodgett Authorized Installer.

If your door is narrower than the carton, then the oven will have to be unpacked. Follow the directions shown in the Pre-Installation Procedures Manual.

BE2136 OVEN INSTALLATION
REQUIRED KITS AND EQUIPMENT

TYPE OF INSTALLATION	BE2136 Single Oven Installation Kit P/N 44919 45529 (CE)	BE2136 Double Oven Installation Kit P/N 44920 45530 (CE)	BE2136 Triple Oven Installation Kit P/N 44921 45531 (CE)	BE2136 Additional Cavity Installation Kit P/N 44974 45532 (CE)
BE2136 Single Oven	1			1
BE2136 Double Oven		1		2
BE2136 Triple Oven			1	3

Figure 2-1 - Installation Kit

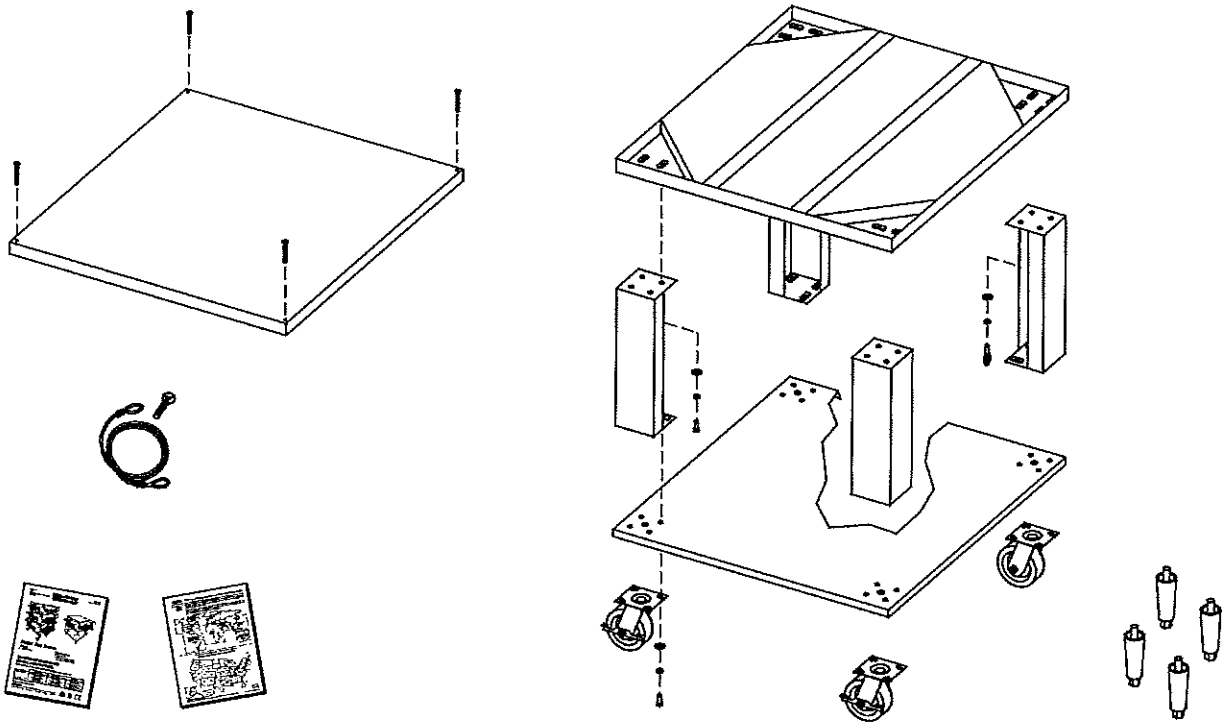

I. INSTALLATION KIT - see Figure 2-1

Item	*Qty. Single Oven*	*Qty. Double Oven*	*Qty. Triple Oven*	*Part No.*	*Inc. with domestic ovens?*	*Inc. with CE ovens?*	*Description*
1	1	1	1	48605	Yes	Yes	Top panel
2	2	2	2	3A80A8801	Yes	Yes	Screw, pan head #10 x 2″
3	1	1	1	42893	Yes	Yes	Base pad
4a	4	4	--	42890	Yes	Yes	17-1/2″ (445mm) leg extension, for single and double ovens
4b	--	4	--	45360	Yes	Yes	20-1/2″ (521mm) leg extension, optional
4c	--	4	--	45329	Yes	Yes	25-1/2″ (648mm) leg extension, optional
4d	--	--	4	44799	Yes	Yes	6″ (152mm) leg extension, for triple ovens only
5	2	2	2	22290-0009	Yes	Yes	Caster, with flat plate and brake
6	2	2	2	22290-0010	Yes	Yes	Caster, with flat plate (no brake)

NOTE: Domestic and standard export ovens include 2 braking casters (item 5) and 2 non-braking casters (Item 6). CE-approved ovens include 4 non-braking casters (Item 6) SOLELY for the purpose of moving the oven to the installation location. Casters are NOT suitable for use as part of CE oven installations. Refer to the notice on the preceding page.

7	4	4	4	22450-0028	No	No	Leg, adjustable, 6″ (152mm)
8	1	1	1	21392-0004	Yes	Yes	Eyebolt, 3/4″
9	A/R	A/R	A/R	220373	Yes	Yes	Hex bolt, 3/8″-16 x 1″

NOTE: CE-approved ovens include 32 hex bolts. Domestic and standard export ovens include 31 hex bolts and one eyebolt (item 8) that acts as an anchor for the restraint cable (Item 12). CE ovens are mounted on legs (Item 7) and do not use a restraint cable.

10	32	32	32	21416-0001	Yes	Yes	Flat washer, 3/8″
11	32	32	32	21422-0001	Yes	Yes	Lockwasher, 3/8″
12	1	1	1	22450-0228	Yes	Yes	Restraint cable assembly
13	1	1	1	50236	Yes	Yes	*Owner's Operating and Installation Manual*
14	1	1	1	1002040	Yes	Yes	*Authorized Service Agency Listing*
15	1	1	--	46393	Yes	Yes	Lower shelf

Figure 2-5. MODEL BE2136 SINGLE OVEN DIMENSIONS

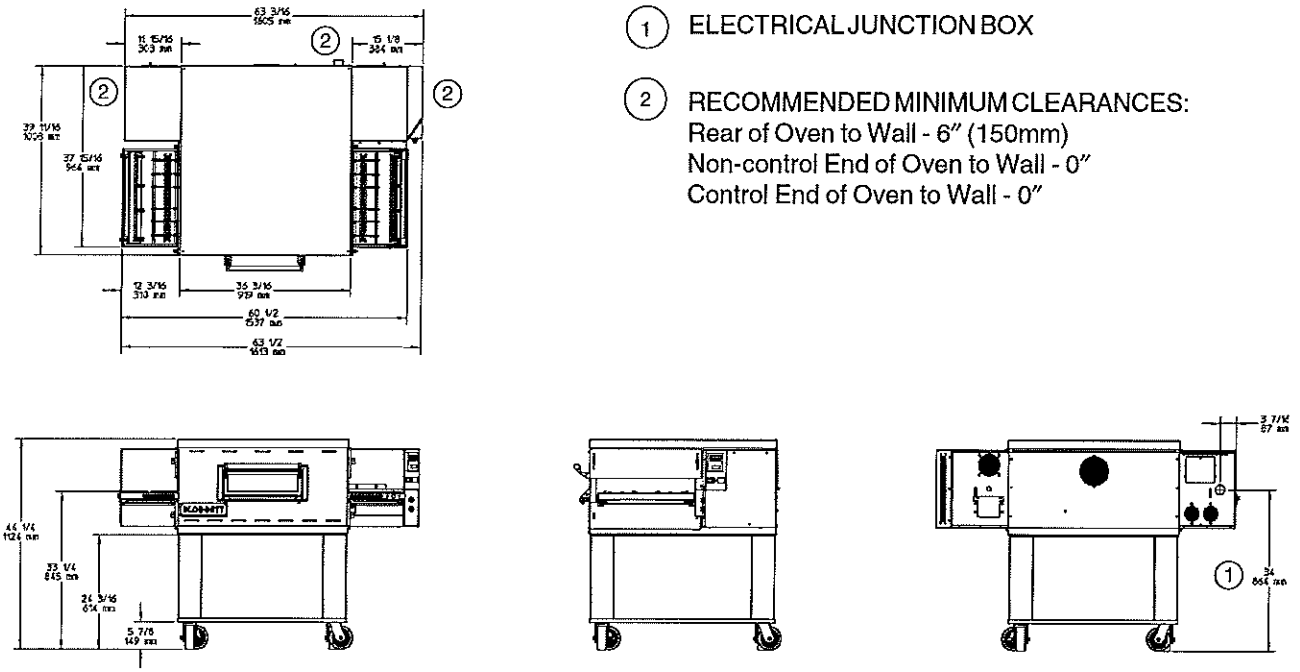

(1) ELECTRICAL JUNCTION BOX

(2) RECOMMENDED MINIMUM CLEARANCES:
Rear of Oven to Wall - 6″ (150mm)
Non-control End of Oven to Wall - 0″
Control End of Oven to Wall - 0″

Figure 2-6. MODEL BE2136 DOUBLE OVEN DIMENSIONS

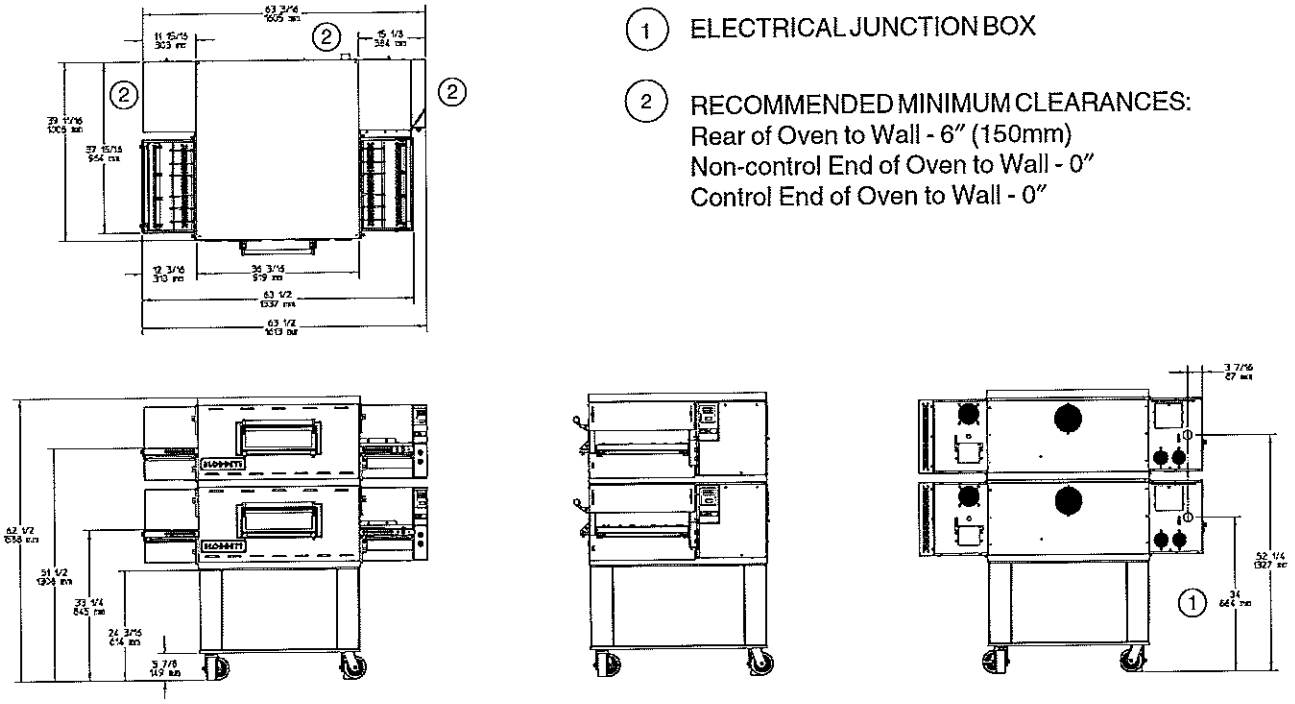

(1) ELECTRICAL JUNCTION BOX

(2) RECOMMENDED MINIMUM CLEARANCES:
Rear of Oven to Wall - 6″ (150mm)
Non-control End of Oven to Wall - 0″
Control End of Oven to Wall - 0″

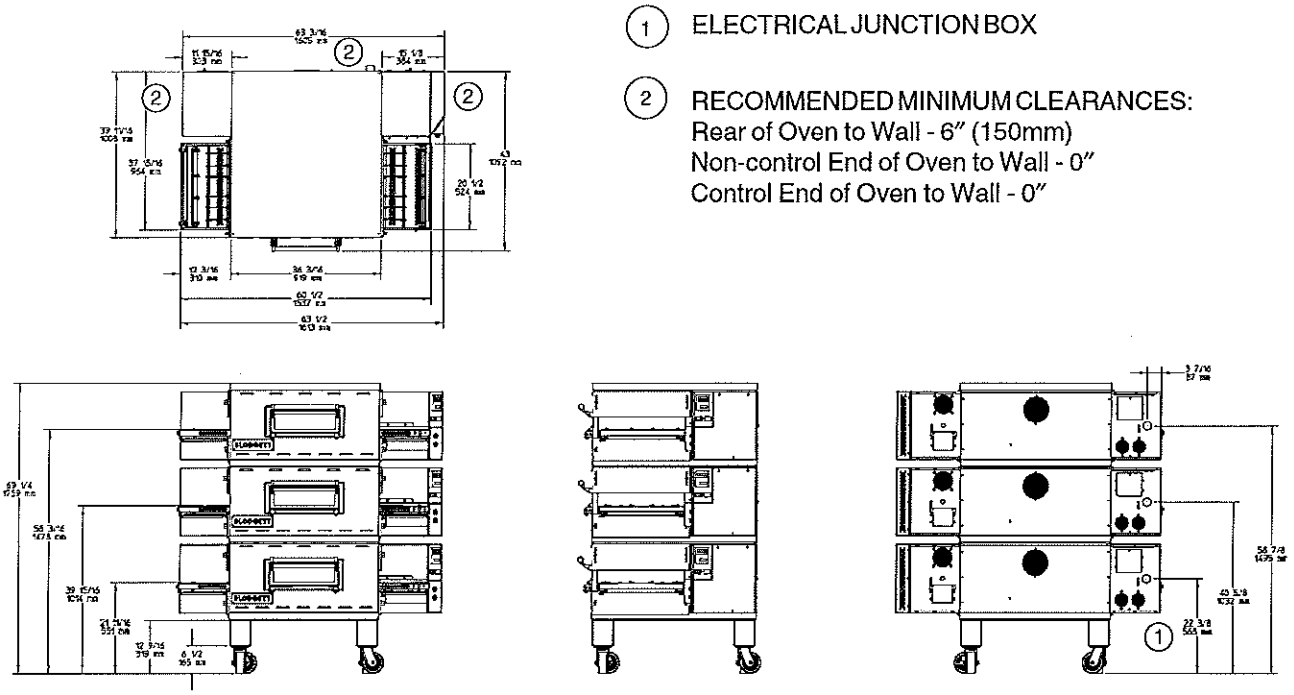

(1) ELECTRICAL JUNCTION BOX

(2) RECOMMENDED MINIMUM CLEARANCES:
Rear of Oven to Wall - 6" (150mm)
Non-control End of Oven to Wall - 0"
Control End of Oven to Wall - 0"

Figure 2-7. MODEL BE2136 TRIPLE OVEN DIMENSIONS

RESTRAINT CABLE INSTALLATION

Install the restraint cable assembly on the oven, as shown in Figure 2-6.

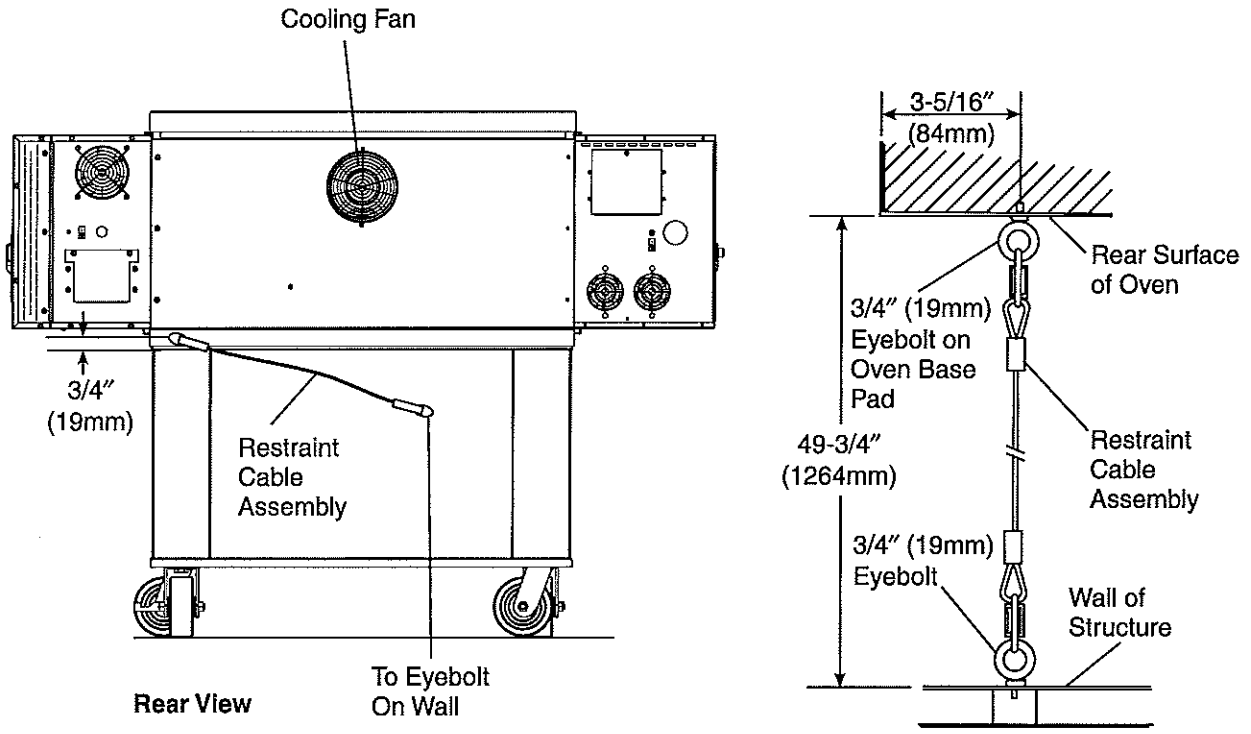

Figure 2-8. Restraint Cable Assembly Installation

UTILITY ROUGH-IN DIMENSIONS AND POSITIONING FOR BE2136-SERIES OVENS

WARNING
DO NOT USE CONDUIT OR GAS LINE FOR GROUND CONNECTION.

CAUTION
IT IS REQUIRED THAT THE OVEN BE PLACED UNDER A VENTILATION HOOD FOR ADEQUATE AIR SUPPLY AND VENTILATION.

ELECTRIC SUPPLY TO BE PROVIDED BY CUSTOMER

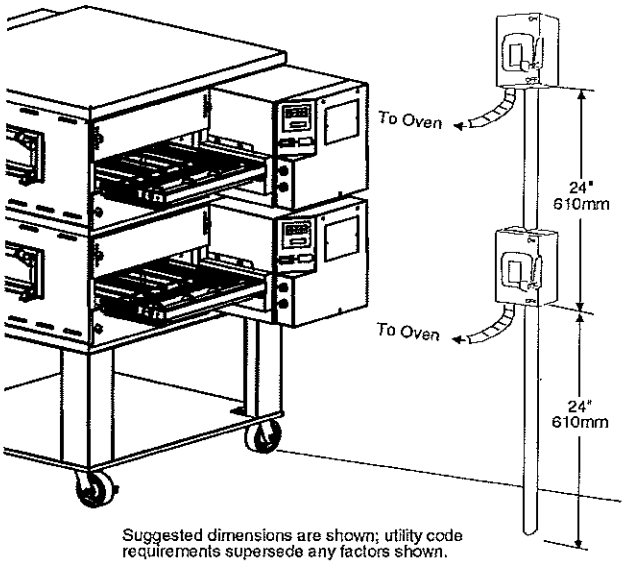

Figure 2-9. Typical BE2136-Series Oven(s) Installation

CIRCUIT BREAKER

Separate circuit breaker with lockout/tagout electrical shutoff for each oven. Wire each oven separately.

100 Amp circuit breaker for 200-240V, or 50 Amp circuit breaker for 380-480V.

ELECTRICAL SPECIFICATIONS

DOMESTIC: 208V main blower motors and elements, 3 Ph, 49.4 Amp draw, 50/60 Hz, 208-240V control circuit, 3 pole, 4 wire system per oven (3 hot, 1 grd).

Do ***NOT*** use conduit for ground.

or

DOMESTIC: 240V main blower motors and elements, 3 Ph, 42.1 Amp draw, 50/60 Hz, 208-240V control circuit, 3 pole, 4 wire system per oven (3 hot, 1 grd).

Do ***NOT*** use conduit for ground.

or

EXPORT: 380V elements, 3 Ph, 27.0 Amp draw, 50/60 Hz, 208-240V control circuit and main blower motor, 4 pole, 5 wire system per oven (3 hot, 1 neutral, 1 grd).

Do ***NOT*** use conduit for ground.

or

DOMESTIC: 480V elements, 3 Ph, 21.6 Amp draw, 50/60 Hz, 208-240V control circuit and main blower motor, 4 pole, 5 wire system per oven (3 hot, 1 neutral, 1 grd).

Do ***NOT*** use conduit for ground.

ELECTRICAL RATING

17 kW/hr.

SUPPLY WIRE

Supply wire size must be a minimum of #8 AWG (10^2mm) and must be in compliance with local codes.

NOTE: The electrical terminal connection marked "MP" located inside the control compartment is designated for the blue (neutral) wire to the oven. See the electrical wiring/schematics in Section 7 of this manual.

SUGGESTED

If space permits, service should be located near the control console end of the oven(s) to allow convenient access to safety switches.

II. VENTILATION GUIDELINES

A mechanically driven ventilation system is required for the BE2136 Series Blodgett conveyorized electric ovens. The minimum hood canopy dimensions are outlined below.

Local codes and conditions vary greatly from one area to another and must be complied with. Following are the suggested requirements for good ventilation. Please remember these are recommendations or guidelines, you may have a special condition or problem that will require the services of a ventilation engineer or specialist. Proper ventilation is the oven owner's responsibility. Improper ventilation can inhibit oven performance. It is recommended that the ventilation and duct work be checked out every three months. Grease filters in the intake of the hood may be required by local codes.

VENTILATION HOOD

The rate of air flow exhausted through the ventilation system is generally between 1400 and 2500 cu. ft./min. (40 and 70 m^3/min), but may vary depending on the oven configuration and hood design. To avoid a negative pressure condition in the kitchen area, return air must be brought back to replenish the air that was exhausted. A negative pressure in the kitchen can cause heat related problems to the oven components as if there were no ventilation at all. The best method of supplying return air is through the heating, ventilation and air conditioning system. Through they system, the air can be temperature controlled for summer and winter. Return air can be brought in directly from outside the building, but detrimental affects can result from either extreme seasonal hot and cold temperature from the outdoors.

NOTE: *Return air from fan driven system within the hood must not blow at opening of bake chamber or poor oven baking performance will result.*

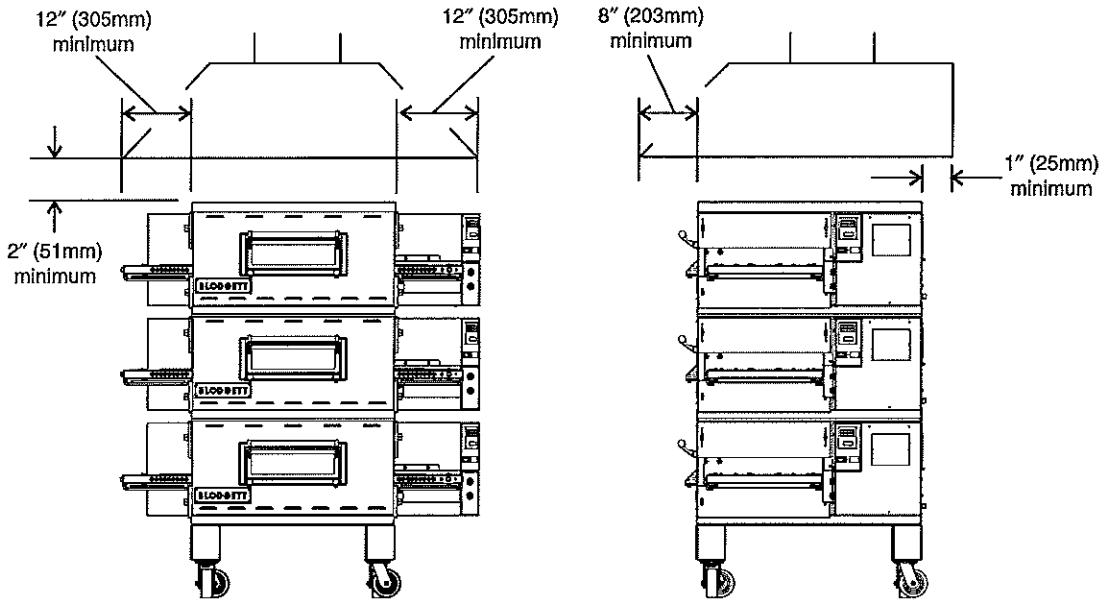

Figure 2-10. Vent Hood

III. ELECTRICAL CONNECTION INFORMATION FOR BE2136-SERIES OVENS.

WARNING

Authorized supplier personnel normally accomplish the connections for the ventilation system, electric supply, and gas supply, as arranged by the customer. Following these connections, the factory-authorized installer can perform the initial startup of the oven.

Check the oven data plate (Figure 2-11) before making any electric supply connections. Electric supply connections must agree with data on the oven data plate.

NOTE: The electric supply installation must satisfy the requirements of the appropriate statutory authority, such as the National Electrical Code (NEC), ANSI/NFPA70, (U.S.A.); the Canadian Electrical Code, CSA C22.2; the Australian Code AG601; or other applicable regulations.

A fused disconnect switch or a main circuit breaker (customer furnished) MUST be installed in the electric supply line for each oven; it is recommended that this switch/circuit breaker have lockout/tagout capability. The electric supply connection must meet all national and local electrical code requirements. Copper is the recommended material for the electrical supply conductors.

IV. ELECTRIC SUPPLY FOR ELECTRICALLY HEATED OVENS

Power requirements for electrically heated ovens are usually 208 - 240VAC, 3-phase, 4-wire (3 'hot', 1 ground), although ovens built for export can have power requirements of 380VAC and 480VAC. (These ovens have a 5-wire system.) A 2" (51mm) diameter cutout/hole in the back of the machinery compartment provides access for the electrical supply connections. Using flexible cable(s) for the electrical power supply conductors requires a 2" (51mm) strain-relief fitting (not furnished) to enable safe access to the terminal block from which oven power is distributed.

The supply conductors must be of the size and material (copper) recommended to provide the current required; (refer to the data plate for the ampere specifications). The electric current rating for each conductor supplying a BE2136-Series Oven must comply to local and national codes.

Typical specifications for each BE2136-Series Oven are 208V or 240V, 3-phase, 4-wire, 60-ampere, 17kW; this oven requires 60-ampere service. A BE2136-Series Double Oven (Figure 1-2) installation would require two 60-ampere service connections, one for each oven; the 17kW power consumption also doubles for such an installation to 34kW.

The 208V or 240VAC electrically heated oven uses two legs of the supplied power to provide 208V or 240VAC power for the oven control circuitry.

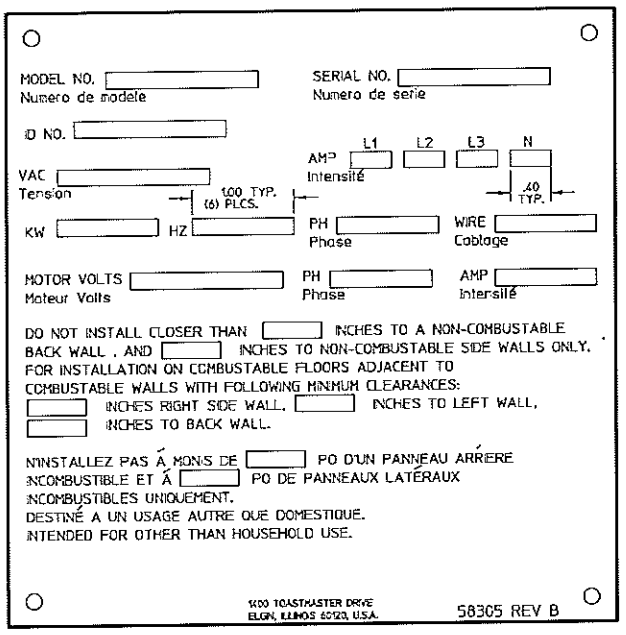

Figure 2-11. Typical Electric Oven Data Plate

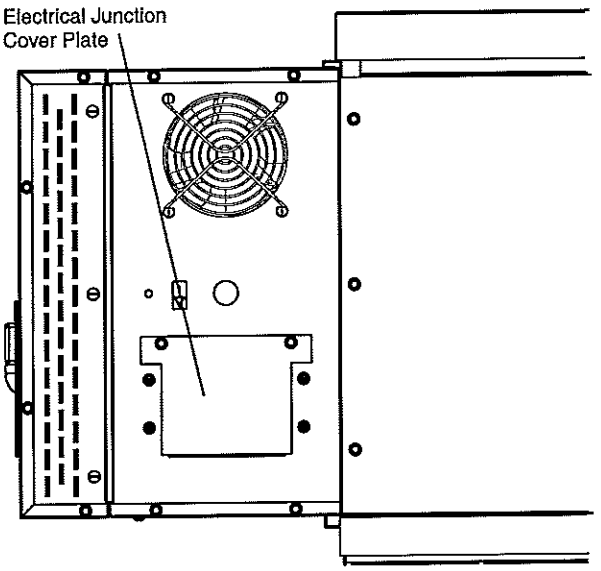

Figure 2-12. Junction Connection Box

VI. CONVEYOR REAR STOP AND END STOP INSTALLATION

Locate the conveyor rear stop and end stop in the installation kit. Install the rear stop and end stop at the exit end of the oven. See Figure 2-13.

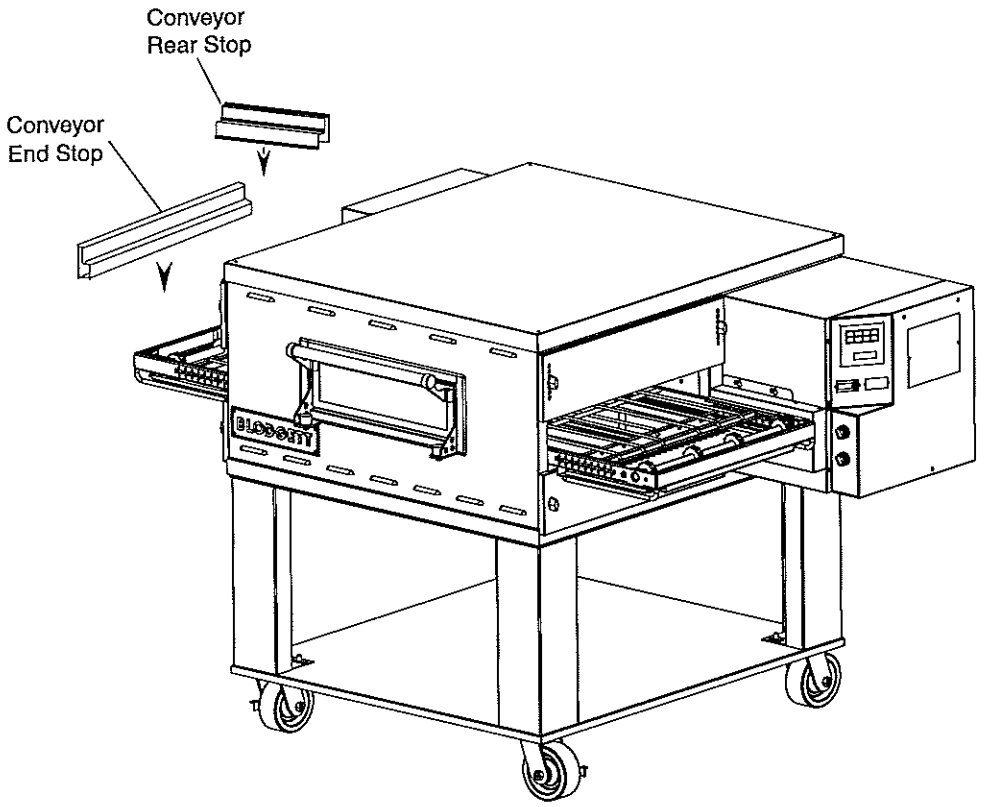

Figure 2-13. Installing Rear and End Stops

SECTION 3
OPERATION

I. CONTROL FUNCTIONS

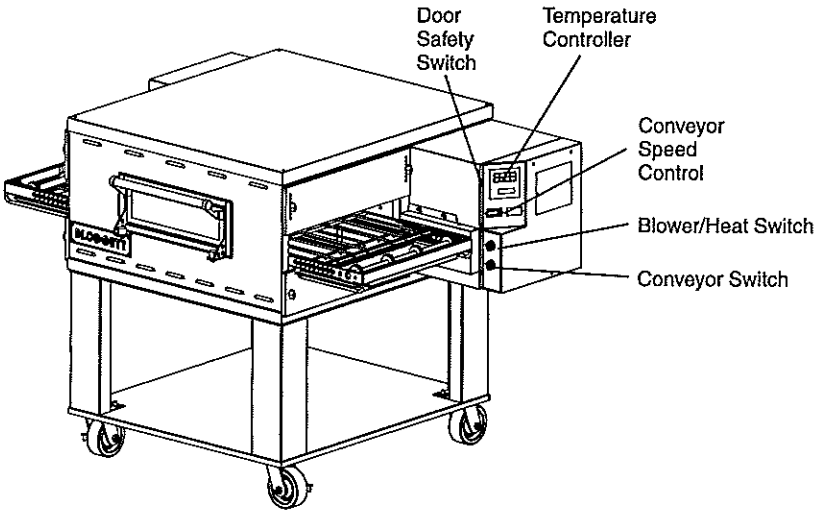

Figure 3-1. BE2136-Series Oven Control Functions

WARNING

A possibility of injury from rotating parts and electric shock exists in this oven.
Never disassemble or clean the oven with the BLOWER/HEAT switch or any other oven control turned "ON" or "I". Turn "OFF" or "O" and lockout or tagout all electric power to the oven before attempting to clean or service this oven.

II. COMPONENT INFORMATION AND LOCATION (Figures 3-1 and 3-2)

A. Door Safety Switch

The Door Safety Switch is located at the lower left side of control panel opening. Opening the control panel door permits this switch to open, disconnecting power to all electrical controls.

> **CAUTION**
> Do NOT touch the wires going to this safety switch. Current is always present.

B. Blower Switch

The blower switch has two positions. The switch must be "ON" or "I" for the burner to come on and permit the oven to warm up. The fan circulates the air throughout the oven and must stay on during baking and during the cool down cycle above 200°F (93°C) to prevent blower bearing damage. To protect the blower motor and bearings a thermostatic override is built into the oven. If the temperature inside the oven is over 180°F (82°C) the main blower will continue to run after the blower switch is turned to the "OFF" or "O" position.

An air pressure switch monitors the air flow from the blower, acting as a safety interlock for the burner. The burner cannot light, if the air switch does not sense air flow off the main blower fan.

C. Heat Switch

Turning the HEAT switch to "ON" or"I" will initially set up the oven purge circuit. After approximately 30 seconds, the burner lights. After the burner is lit, a flame sensor sends a signal to the ignition module to stop the spark. The burner will run unless the flame sensor does not detect a flame or the heat switch is turned to the "OFF" or "O" position.

The HEAT switch is in series with the burner blower motor centrifugal switch, the high-temperature safety switch, and the blower fan air pressure switch. All three safety switches must be closed for gas to flow and the burner to light.

D. Temperature Controller

The temperature controller is a solid-state, on/off type to maintain the operator-set temperature. The temperature controller continuously monitors the oven temperature and turns on the modulating solenoid valve in a gas-heated oven. The heat is on for the time required to maintain a constant oven temperature.

The temperature controller contains a low-limit switch which allows the oven to cool down to 200°F (93°C) before shutting off the blower. A high-limit indication (ALM 1) will appear on the display if the oven reaches 650°F (343°C).

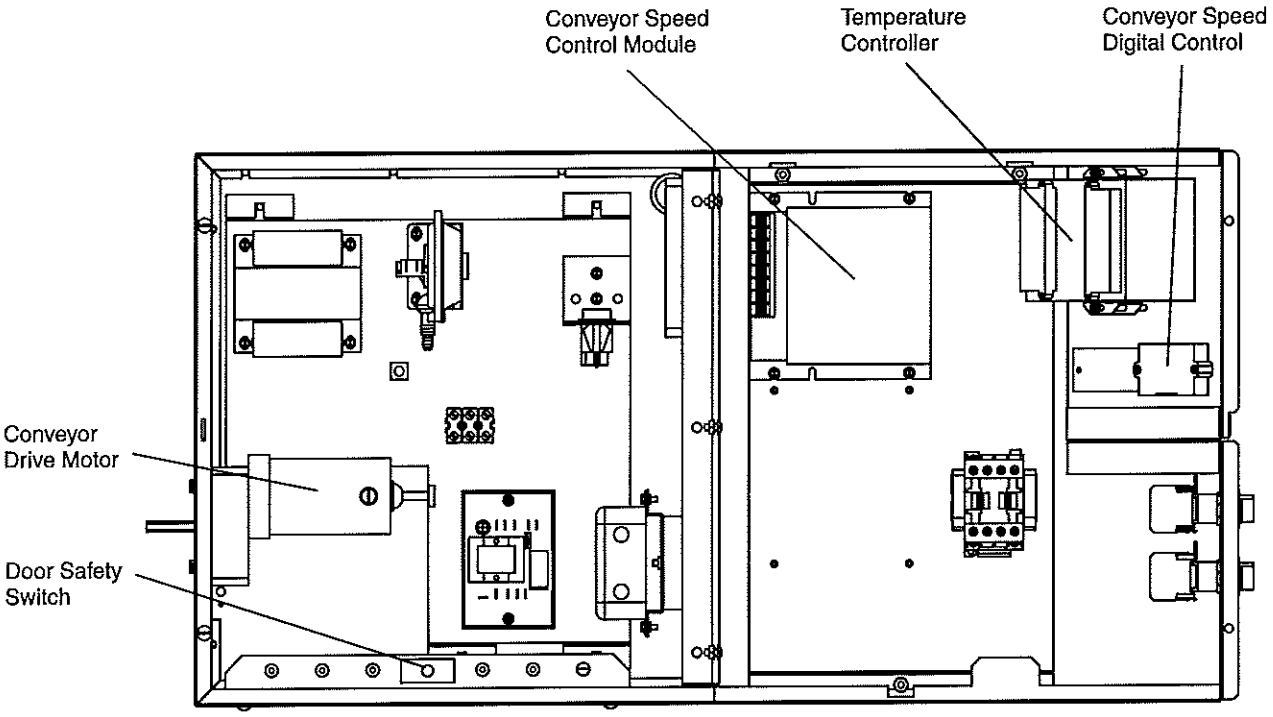

Figure 3-2. Interior View of Machinery Compartment and Control Console

E. Conveyor

The on-off switch for the conveyor motor is on the control panel. Also on the control panel is the digital conveyor speed control. The digital control can be adjusted from 3 min. to 30 min. bake time (conveyor speed). Refer to Figure 3-3.

Conveyor speed is measured by the amount of time it takes for an item to go through the bake chamber of the oven.

MEASURING CONVEYOR SPEED.

See Figures 3-4 and 3-5.

To check conveyor speed, place a product item at the entrance end of baking chamber as shown. Time how long it takes for the leading edge of the item to go from the entrance end of the baking chamber to the exit end. This should be the conveyor speed shown on the conveyor speed digital control.

NOTE: In Figures 3-4 and 3-5, the oven shown is with the conveyor running right to left.

WARNING

Possibility of injury from rotating parts and electrical shock exist in this oven.

Never disassemble or clean the oven with the BLOWER/HEAT switch or any other part of the oven turned "ON" or "I". Turn "OFF" or "O" and lockout or tagout all electrical power to the oven before attempting to clean or service this oven.

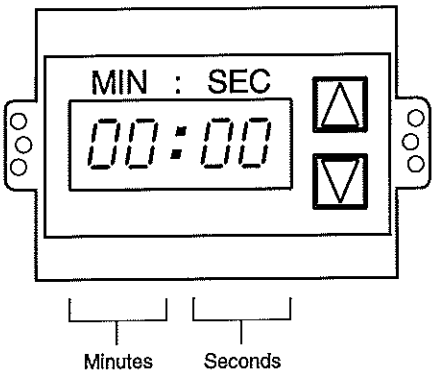

Figure 3-3. Conveyor Speed Digital Control

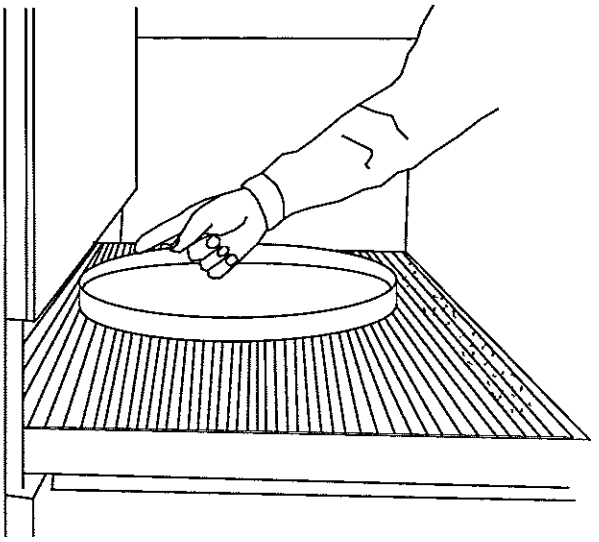

Figure 3-4. Product at entrance end of baking chamber – BEGINNING OF TIMING

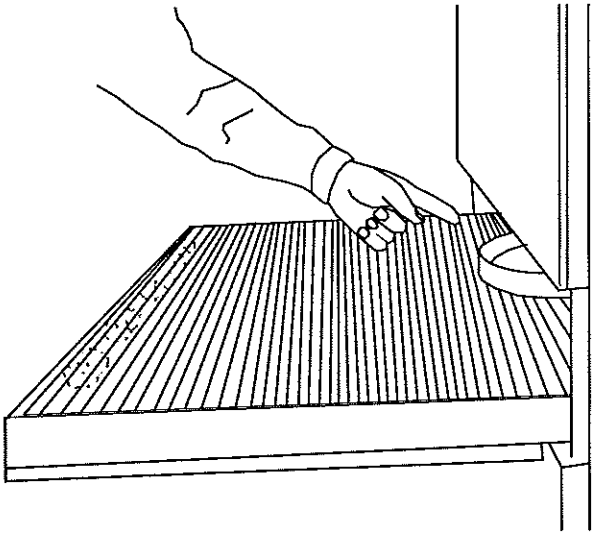

Figure 3-5. Product at exit end of baking chamber – END OF TIMING

WARNING

OVEN MUST BE KEPT CLEAR OF COMBUSTIBLES AT ALL TIMES.

III. STEP-BY-STEP OPERATION

Control Panel (On split belt ovens, two conveyor speed controls are mounted on the control panel.)

A. Startup Procedures

Daily Startup

1. Turn the BLOWER/HEAT switch (Figure 3-6) to the "ON" or "I" position. This starts the main blower fan and the cooling fan. The blower circulates air through the air fingers and must stay on during the cooking or baking process.

2. Check to see if the cooling fan (see Figure 1-8) is operating when the BLOWER/HEATswitch (see Figure 3-6) is turned "ON" or "I". The cooling fans cool the control components and burner blower motor. The cooling fan, located at the rear of the electrical control cabinet blows air into and through the cabinet. Air is exhausted through the front of the cabinet and also out the front of the oven. Refer to Daily Maintenance Section for fan intake checking procedure.

IMPORTANT NOTE

The cooling fan operates when the BLOWER/ HEAT switch is turned "ON" or "I". It must operate to keep the control console below 140°F (60°C).

3. Turn the CONVEYOR switch (Figure 3-6) to the "ON" or "I" position. This starts the conveyor belt moving through the oven. Set the conveyor speed for the desired baking time. Refer to the following Procedures E, F and G.

4. Set the temperature controller to the desired baking temperature. See section on bake times to determine desired temperature.

NOTE: For complete temperature controller operation instructions refer to Step C.

5. Turn the HEAT switch (Figure 3-6) to the "ON" or "I" position. This completes a circuit to supply electric power to the electric heating system.

6. Close front window.

7. Oven will reach a baking temperature of 500°F (232°C) in approximately 10 minutes. Allow the oven to cycle for 30 minutes after it has reached desired bake temperatue. The oven is now ready for baking.

Power Failure

In case of power failure, turn off all switches; open oven window and remove product. After power has been reestablished follow normal startup procedure.

B. Shutdown Procedure

1. Turn the BLOWER/HEAT switch to "OFF" or "O".

NOTE: The blowers will remain on until the oven temperature cools down to 200°F (93°C) at which time they will stop automatically.

2. Make certain that there are no products left on the conveyor inside the oven. Turn the CONVEYOR switch to "OFF" or "O".

3. Open the oven window.

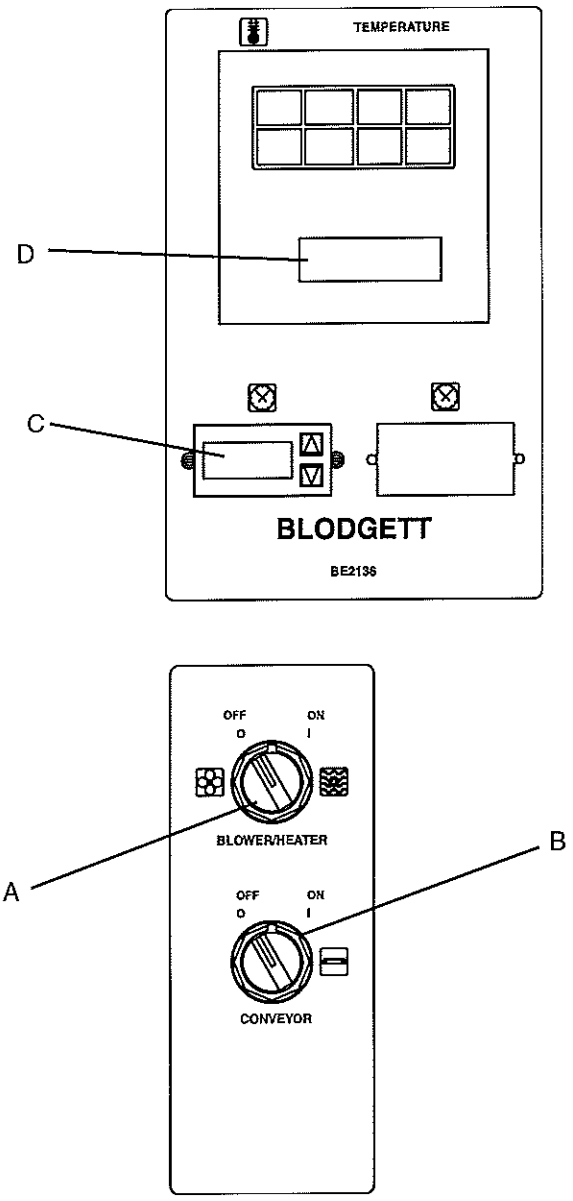

Figure 3-6. Control Panel

LOCATION AND DESCRIPTION OF CONTROLS

A. **"BLOWER/HEAT" Switch:** Turns the blower and cooling fans on and off, as well as, the gas burner system. The gas burners will activate shortly after the BLOWER/HEAT switch is turned on. The Temperature of the oven will be regulated by the temperature controller.

B. **"CONVEYOR" Switch:** Turns the conveyor drive motor on and off.

C. **Conveyor Speed Controller:** Adjusts and displays the bake time. Single-belt ovens have one controller. Split belt ovens have one controller for each conveyor belt, labeled "FRONT" and "BACK."

D. **Digital Temperature Controller:** Continuously monitors the oven temperature. Settings on the Digital Temperture Controller control the activation of the burner. Keypad controls allow the operator to select the cooking temperature and monitor oven operation.

NOT SHOWN:

E. **Machinery and Control Compartment Safety Switches:** Disconnect electrical power to the controls and blowers when EITHER the machinery compartment door OR the control compartment door is opened. The doors should only be opened by authorized service personnel.

II. NORMAL OPERATION - STEP-BY-STEP

A. DAILY STARTUP PROCEDURE

1. Check that the circuit breaker/fused disconnect is in the on position. Check that the window is closed.

2. Turn the "BLOWER/HEAT" switch to the "ON" ("I") position.

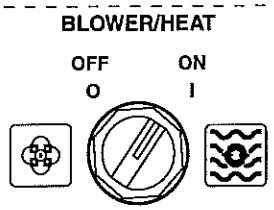

3. Turn the "CONVEYOR" switch to the "ON" ("I") position.

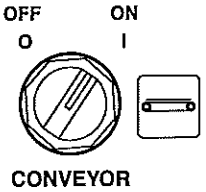

4. If necessary, adjust the conveyor speed setting by pressing the △ or ▽ pushbuttons on the conveyor speed controller to change the displayed bake time.

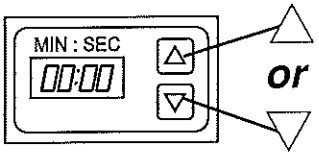

5. Adjust the temperature controller to a desired set temperature, if necessary.
   - Press the Set Point and Unlock keys at the same time. Wait for the "SET PT" light to turn on.

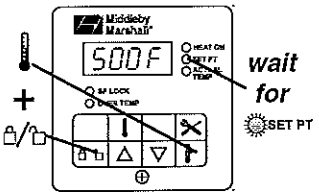

   - Press the Up Arrow and Down Arrow Keys as necessary to adjust the setpoint.

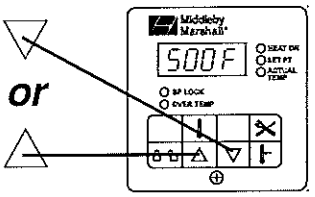

6. Wait for the oven to heat to the setpoint temperature. Higher setpoint temperatures will require a longer wait. The oven can reach a temperature of 500°F (232°C) in approximately 15 minutes.

7. *(Optional)* Press the Temperature key to show the Actual Temperature in the display, and wait for the "ACTUAL TEMP" light to turn on. This allows you to monitor the oven temperature as it rises to the setpoint.

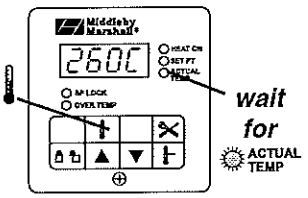

8. Allow the oven to preheat for 10 minutes after it has reached the set point temperature.

B. DAILY SHUTDOWN PROCEDURE

1. Turn the "BLOWER"/ "HEAT" switch to the "OFF" ("O") position. Note that the blowers will remain in operation until the oven has cooled to below 200°F (93°C).

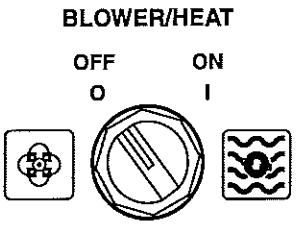

2. Make certain that there are no products left on the conveyor inside the oven. Turn the "CONVEYOR" switch to the "OFF" ("O") position.

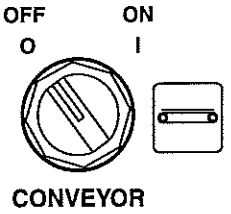

3. Open the window to allow the oven to cool faster.

4. After the oven has cooled and the blowers have turned off, switch the circuit breaker/fused disconnect to the off position.

IMPORTANT

On gas ovens, if the "HEAT ON" light will not illuminate, OR if the oven does not heat, the gas burner may not have lit. Turn the "BLOWER/HEAT", and "CONVEYOR" switches to the "OFF" ("O") position. Wait for AT LEAST FIVE MINUTES before restarting the oven. Then, repeat the Daily Startup procedure.

CAUTION

In case of power failure, turn all switches to the "OFF" ("O") position, open the oven window, and remove the product. After the power has been restored, perform the normal startup procedure. IF THE OVEN WAS SWITCHED OFF FOR LESS THAN 5 MINUTES, WAIT FOR AT LEAST FIVE MINUTES BEFORE RESTARTING THE OVEN.

The burner will not operate and gas will not flow through the burner without electric power. No attempt should be made to operate the oven during a power failure.

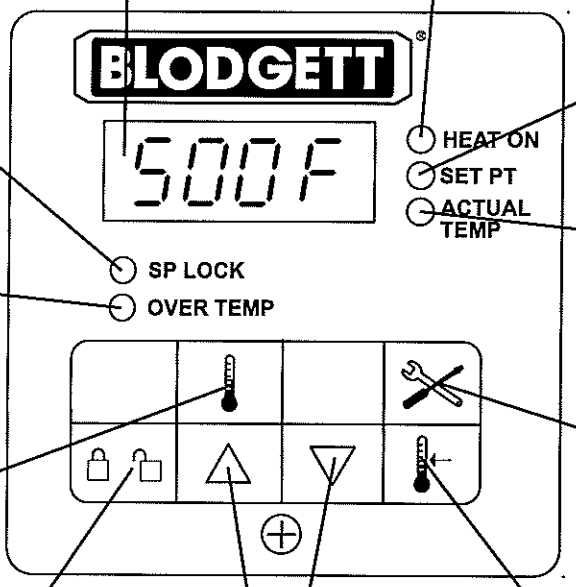

Display
Shows the Set Point or the Actual Temperature in degrees Fahrenheit (F) or Celsius (C).

"HEAT ON" Light
Lights when the burner is in operation.

"SP LOCK" Light
Lights when the set point is locked out from changes. This setting can only be changed by service personnel.

"SET PT" (setpoint) Light
Lights when the set point is shown in the display.

OVERTEMP Light
Lights when the oven temperature is greater than 650°F (343°C). Refer to Quick Reference: Trouble-shooting in this section.

"ACTUAL TEMP" Light
Lights when the Actual Temperature is shown in the display.

Temperature Key
Press this key once to view the Actual Temperature in the Display.

Service Key
Service use only.

Unlock Key
Press this key together with the Set Point Key to allow the Set Point to be changed. Changes can only be made for 60 seconds.

Up Arrow and Down Arrow Keys
Press these keys to adjust the Set Point up or down. If the Set Point will not change, refer to Set Point Key and Unlock Key in this section.

Set Point Key
Press this key together with the Unlock Key to allow the Set Point to be changed. Changes can only be made for 60 seconds.

IV. QUICK REFERENCE: TROUBLESHOOTING

SYMPTOM	PROBLEM	SOLUTION
OVERTEMP *light is lit, food product is undercooked*	The oven temperature exceeded 650°F (343°C), and the burner was automatically shut down.	• Follow the procedures under Daily Shutdown Procedures in this section to shut down the oven. Contact your Middleby Marshall Authorized Service Agent to determine and correct the cause of the condition to prevent damage to the oven.
Oven will not turn on at all	Electrical power may not be reaching the oven, or the controls may be set incorrectly.	• Check that the circuit breaker/fused disconnect is turned on. • Check that the "BLOWER" Switch is in the "ON" ("I") position. The burner cannot engage until the blowers are in operation.
Oven shuts down shortly after it is turned on	The gas burner did not light within 90 seconds of turning the "HEAT" Switch to the "ON" ("I") position. This automatically engages a safety lockout mode.	• Turn the "HEAT", "BLOWER", and "CONVEYOR" switches to the "OFF" ("O") position. • Wait for AT LEAST FIVE MINUTES before restarting the oven. • Repeat the Daily Startup procedure.
rSEt *appears in display, oven is not heating*	The oven did not reach 200°F (93°C) within 15 minutes of startup, and the oven has stopped heating.	• Turn the "HEAT", "BLOWER", and "CONVEYOR" switches to the "OFF" ("O") position. • Wait for AT LEAST FIVE MINUTES before restarting the oven. • Repeat the Daily Startup procedure.
Oven will not heat	Controls may be set incorrectly.	• Check that the Set Point is correctly set. • Check that both the "BLOWER" and "HEAT" Switches are in the "ON" ("I") position. • If the oven still will not heat,turn the "HEAT", "BLOWER", and "CONVEYOR" switches to the "OFF" ("O") position. • Wait for AT LEAST FIVE MINUTES before restarting the oven. • Repeat the Daily Startup procedure. Check that the Set Point is above 200°F (93°C).
Oven is operating, but little or no air is blowing from air fingers	Air fingers may have been reassembled incorrectly after cleaning.	• Turn the oven to the "OFF" or "O" position, and allow it to cool. Disconnect electrical power to the oven. • Refer to Section 4, Maintenance, for instructions on reassembling the air fingers.
Conveyor moves with a jerky motion, or will not move at all	Conveyor may be jammed on an object in the oven, or conveyor belt or drive chain tension may be incorrect.	• Turn the oven to the "OFF" or "O" position, and allow it to cool. Disconnect electrical power to the oven. • Check if the conveyor is blocked by an object inside the oven. • Refer to Section 4, Maintenance, for instructions on checking the conveyor and drive chain tension.
Food products are overcooked or undercooked.	Controls may be set incorrectly.	• Check that the set temperature and bake time settings are correct.

IF THESE STEPS FAIL TO RESOLVE THE PROBLEM, CONTACT YOUR LOCAL BLODGETT AUTHORIZED SERVICE AGENT. A SERVICE AGENCY DIRECTORY IS SUPPLIED WITH YOUR OVEN.

SECTION 4
MAINTENANCE

WARNING

Possibility of injury from rotating parts and electrical shock exist in this oven. Turn off and lockout or tagout electrical supply to oven(s) before attempting to disassemble, clean or service oven(s). Never disassemble or clean the oven with the blower switch or any other part of the oven turned on.

WARNING

Before performing any maintenance work or cleaning, turn main power switch off.

CAUTION

When cleaning do not use any abrasive cleaning materials or water spray, wipe clean only. Never use a water hose or pressurized steam cleaning equipment when cleaning this oven.

NOTICE

If the oven is to be removed from its installed location for servicing, perform the following procedure:

1. Switch off the oven and allow it to cool. Do NOT service the oven while it is warm.
2. Turn off main circuit breakers and disconnect connector from oven.
3. Turn the adjustable legs to put weight on the casters.
4. Move oven to desired location for servicing.
5. When servicing is complete, move oven to original location.
6. Adjust legs to level oven and take weight off casters.
7. Connect electrical and gas connectors to oven.
8. Turn on main circuit breakers.
9. Follow normal startup instructions.

I. MAINTENANCE - DAILY

A. Exterior

Everyday you should clean the outside of the oven with a soft cloth and mild detergent.

WARNING

Never use a water hose or pressurized steam cleaning equipment when cleaning the oven.

B. Cooling Fan

1. TWO COOLING FAN GRILLES AT THE REAR OF EACH OVEN CONTROL COMPARTMENT MUST BE CLEANED DAILY - Clean grilles with a stiff nylon type brush.

2. Check the air intake of the cooling fan daily. The best time to check is right after starting the oven.

IMPORTANT NOTE

The cooling fan operates when the blower switch is turned to "ON" ("I"). It must operate to keep the electrical control cabinet below 140°F (60°C).

WARNING

IF FAN BLADE IS NOT ROTATING, BROKEN, OR FAN ASSEMBLY IS MISSING FROM MAIN BLOWER MOTOR SHAFT, DO NOT OPERATE OVEN. REPLACE COOLING FAN BLADE BEFORE OPERATING OVEN. Serious damage could be done to the burner blower motor and/or solid-state electrical components if oven is operated while cooling fan is not running or vent grille is plugged.

3. Using a stiff nylon brush clean control compartment vent grille. Hot air from control compartment exits from this grille.

C. Conveyor Belt (Figure 4-2)

Everyday, just after starting the oven, stand at the unloading end of the conveyor, and with a brush, remove food particles (crumbs, etc.) clinging to the conveyor belt, brushing them into the crumb pan.

D. Crumb Pans (Figure 4-2)

Remove and clean the crumb pan at each end of the oven. Each crumb pan can be removed by sliding it out, as shown in Figure 4-2. Reinstall the crumb pans after cleaning.

E. Window

The window can be cleaned daily while it is in place.

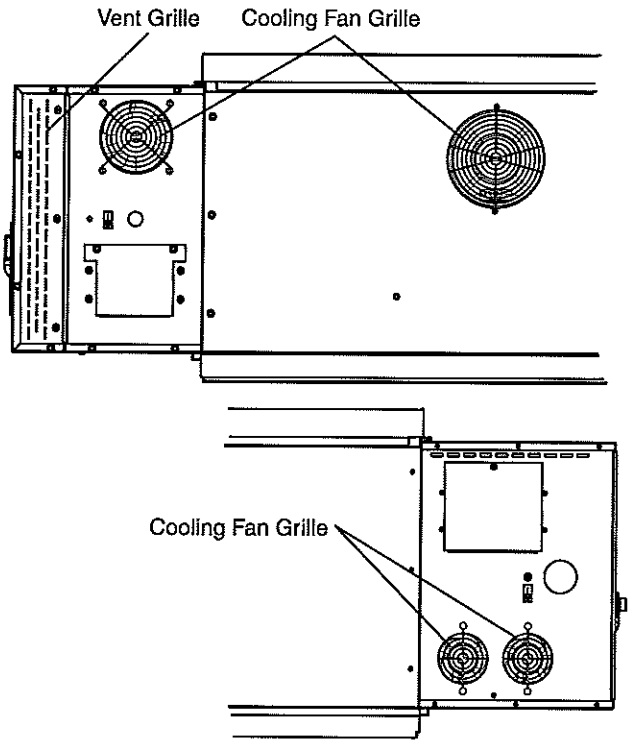

Figure 4-1. Oven Cooling Fans

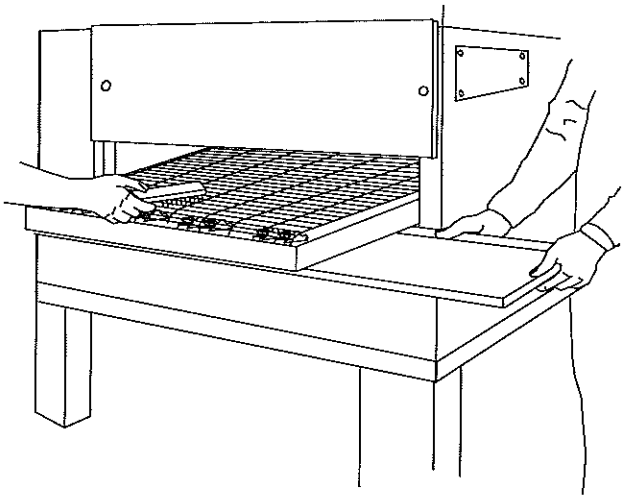

Figure 4-2. Conveyor Belt and Crumb Pan Cleaning

II. MAINTENANCE - MONTHLY

NOTE: **The oven interior may require cleaning more than once a month depending on the volume of baking. To clean the interior, you have to disassemble some parts of the oven.**

When cleaning your Series BE2136 Oven note the following:

PRECAUTIONS-

1. Do not use excessive water or saturation of oven insulation will occur.

2. Do not use a caustic oven cleaner or the aluminized finger manifold surfaces will be severely damaged.

When cleaning your oven, first remove all heavy debris with a vacuum cleaner. Use a damp cloth for light cleaning. For heavier cleaning of baked on grease and carbon deposits use a non-caustic cleaner that will not react with the aluminized finger manifold surfaces.

You can order non-caustic cleaner from your local authorized Blodgett Parts Distributor in the quantities listed below:

Part #	Quantity
27170-0244	Case of Quarts (6)
27170-0246	Case of Gallons (4)

A. Removing Conveyor From Oven For Cleaning

1. Remove crumb pans as shown in Figure 4-2.

2. Remove upper and lower end plugs from each end of oven by removing the two wing screws from each end plug.

3. Remove the conveyor end stop and the conveyor rear stop (Figure 4-3).

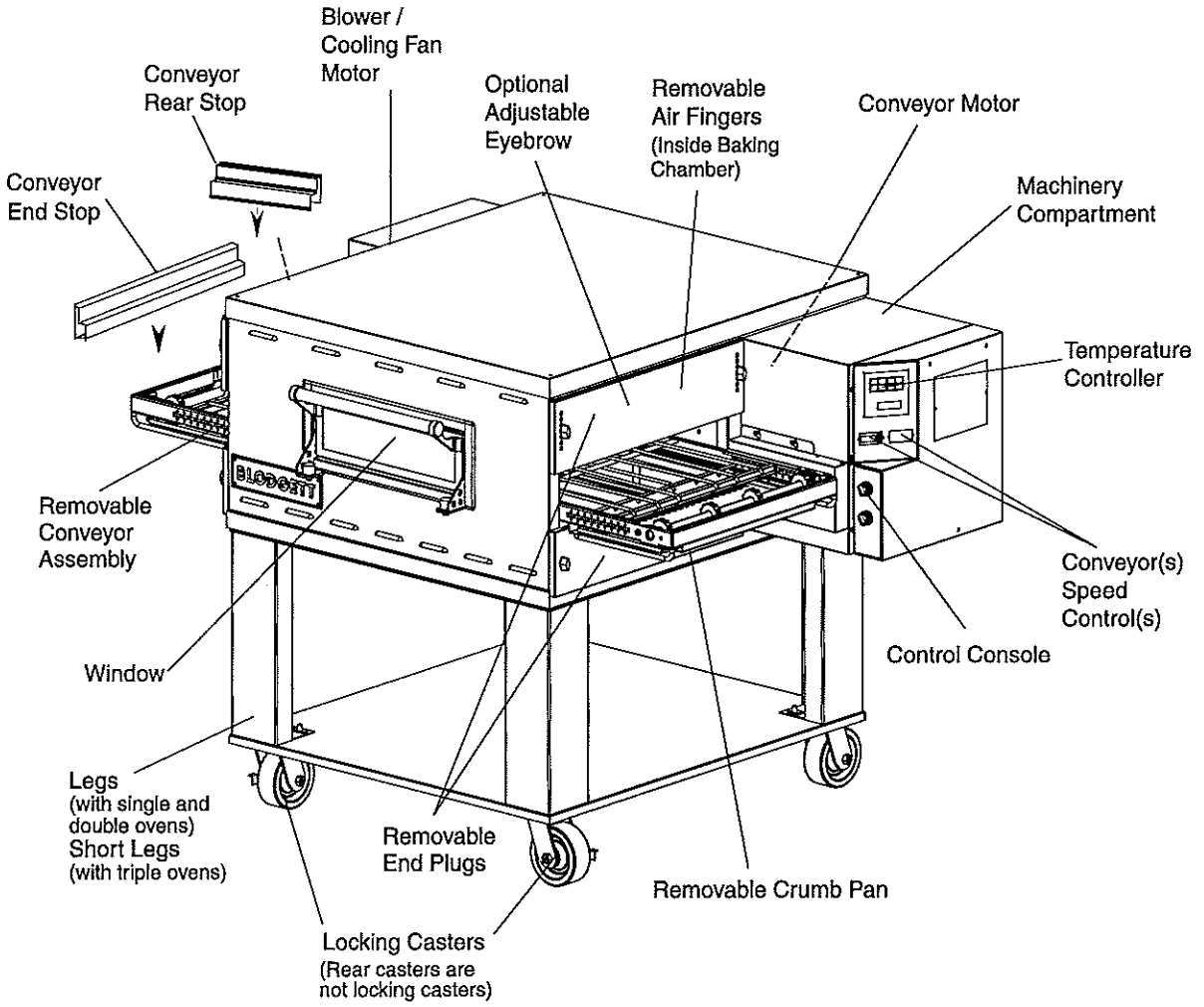

Figure 4-3.

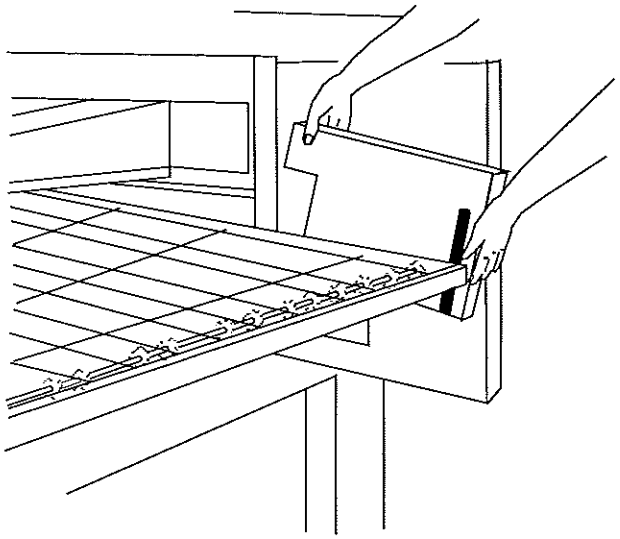

Figure 4-4.

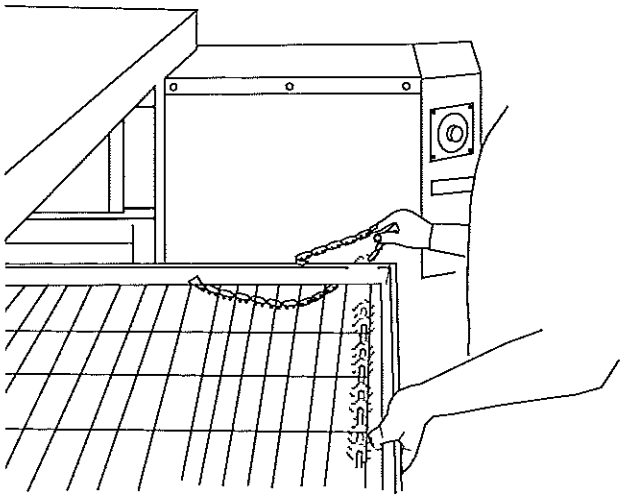

Figure 4-5.

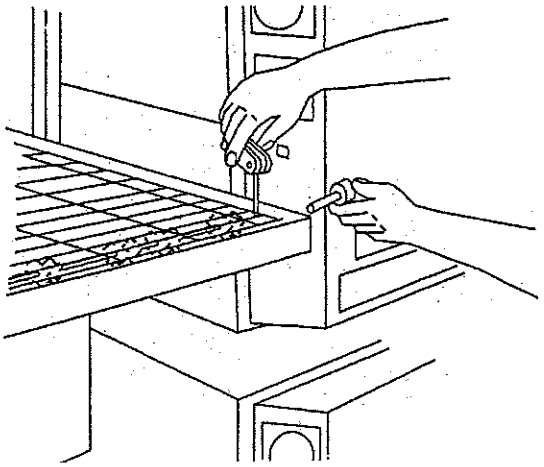

Figure 4-6.

4. Remove conveyor drive chain cover as shown.

5. Remove tension from drive chain by lifting and pushing the conveyor slightly into the oven. Remove drive chain from conveyor drive sprocket as shown.

NOTE: The split belt conveyor assembly can only be removed from the drive end of the oven.

6. Begin sliding conveyor out of the oven as shown.

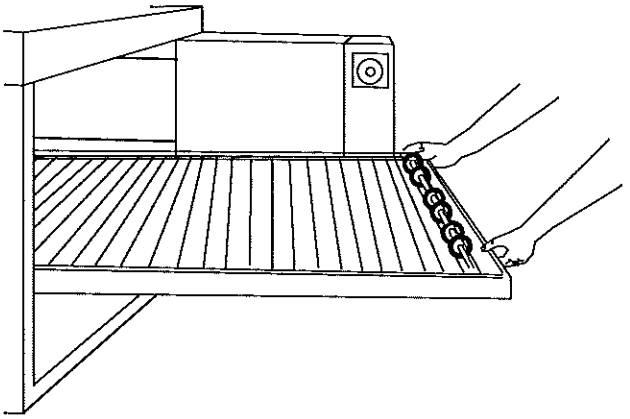

Figure 4-7.

7. Continue sliding the conveyor completely out of the oven, fold it in half and then place it to the side for cleaning. Be careful not to bump drive sprocket while handling conveyor or damage may result to drive shaft.

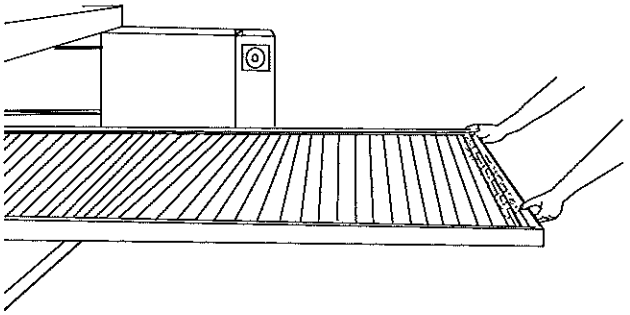

Figure 4-8.

CAUTION

Be careful not to bump the drive sprocket while handling the conveyor, to avoid damaging the drive shaft.

B. Air Fingers Disassembly For Cleaning

1. As the air fingers are removed use a felt pen to mark all parts of the fingers. This includes the finger manifold, inner plate and the outer plate (refer to Figure 1-9). If a blank or choke plate is used, mark that plate also. Fingers are marked in the order shown; as viewed from the front of the oven. (The marks for an upper oven should be preceded with a "U", example UB1, UT2, etc.)

T1	T2	T3	T4
B1	B2	B3	B4

Standard Fingers

2. Slide blank plates straight out.

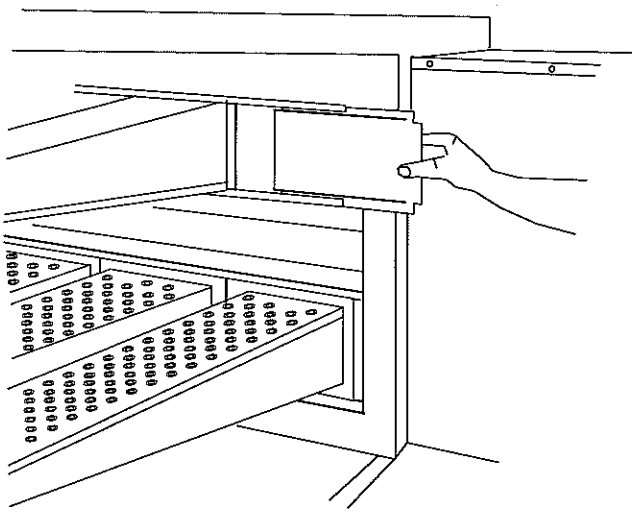

Figure 4-9.

3. Remove air fingers.

NOTE: Some oven users require a custom finger arrangement where the quantity of air fingers may vary.

You can remove top and bottom fingers and blank plates from each or either end. It is highly recommended that each finger be marked before removing so it is placed in exactly the same position when reassembled (refer to step 1).

Remove the air fingers, pull the finger at the back side - pull straight out.

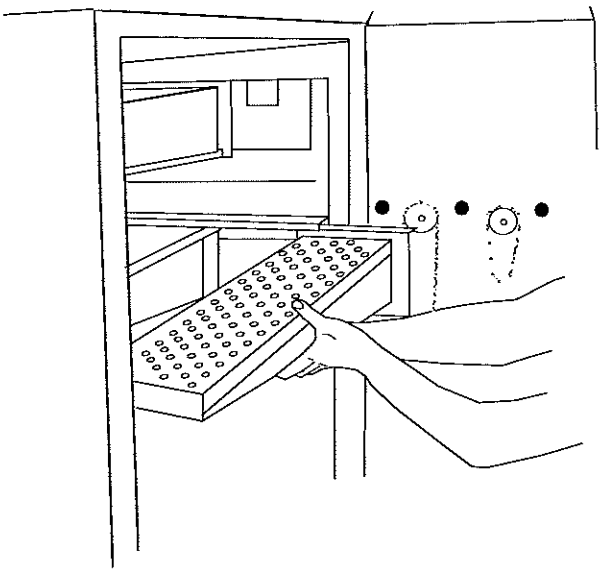

Figure 4-10.

4. With air fingers out, place them in an upright position to remove the outer plate.

5. Gently step o the lip of the finger and pull the outer plate off.

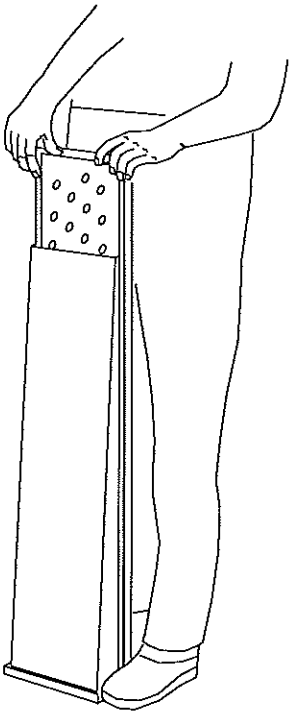

Figure 4-11.

6. To remove the inner plate, pull the plate out and then up.

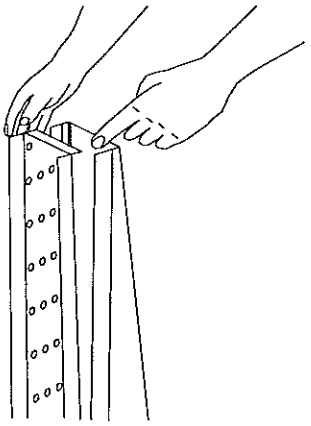

Figure 4-12.

7. The outer finger plate is stainless and may be cleaned by either soaking in a hot, strong detergent solution or using a caustic cleaner. The conveyor belt can also be cleaned in the same way.

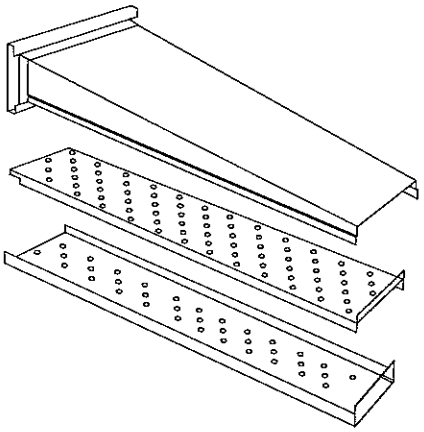

Figure 4-13. Standard Lower Finger

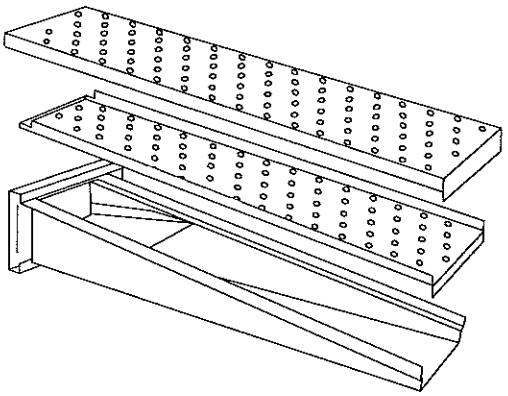

Figure 4-14. Standard Upper Finger

C. Cleaning the Window

The window can be cleaned in place.

D. Reassembly of Air Fingers

1. Air fingers are made up of one inner plate, one outer plate and the finger housing manifold. Be sure to match up the markings (T1, T2, T3, etc.) on all the parts of the air fingers as you are reassembling.

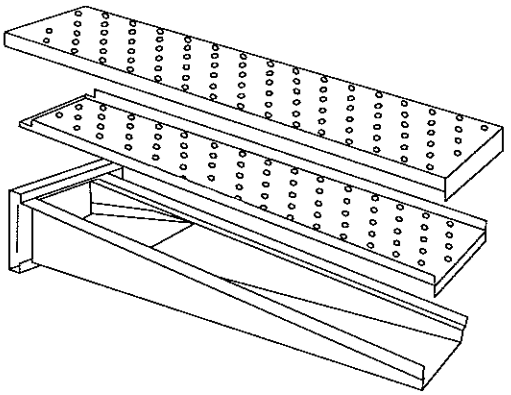

Figure 4-15.

2. Reassemble the inner plate. Keep your fingers clear so you won't pinch them. The inner plate of a finger will only go in one way because of its design.

3. Replace the outer plate by placing your hands flat on the top of the plate and pushing down. Keep your fingers clear so you won't pinch them.

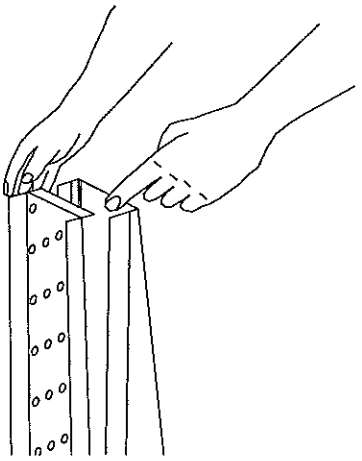

Figure 4-16.

4. Replace the air fingers by pushing in at the back side. Remember to replace them according to the numbers marked on them when they were removed. They must go back in the same way they came out.

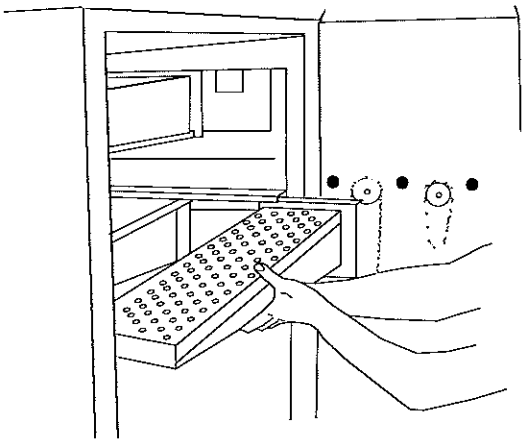

Figure 4-17.

IMPORTANT: When inserting fingers the tab on the outer plate must be in the groove as shown in Figure 4-18. There is a blocking tab on the outside of the groove which will prevent inserting the finger in the groove if the outer plate is moved away from the flange of the finger manifold.

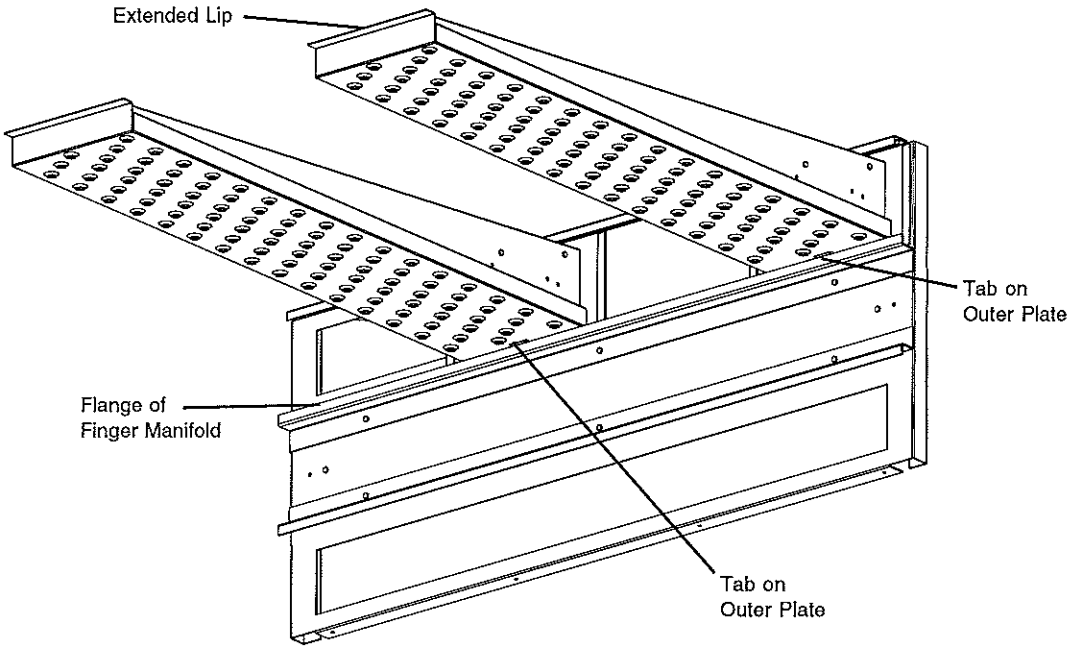

Figure 4-18.

5. Install fingers and blank plates correctly with edges interlocked and no space between edges.

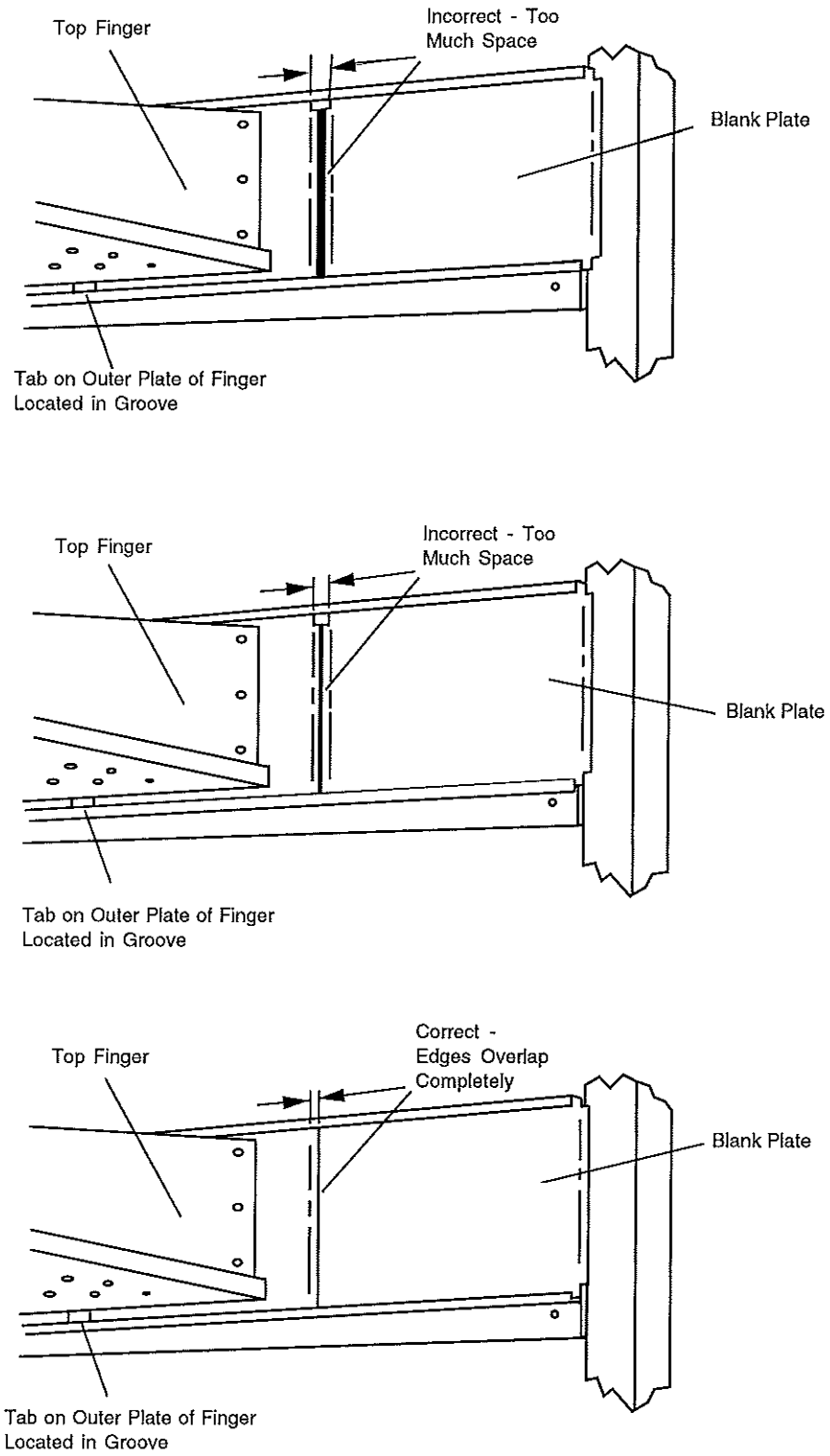

Figure 4-19.

E. Reinstall End Plugs

1. Reinstall lower end plug. Be sure to tighten two wing screws on the end plug.

2. Reinstall conveyor.

3. Reinstall upper end plug. Be sure to tighten two wing screws on the end plug.

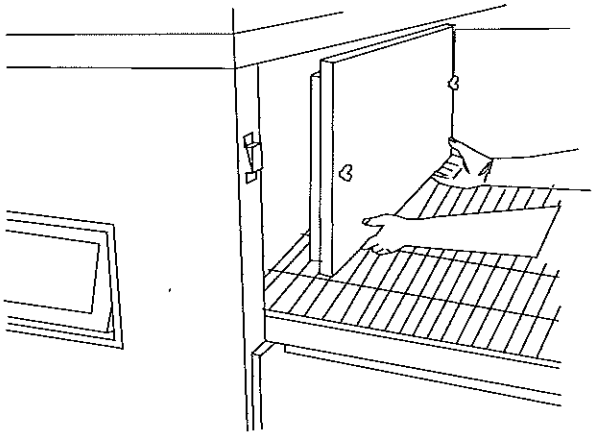

Figure 4-20.

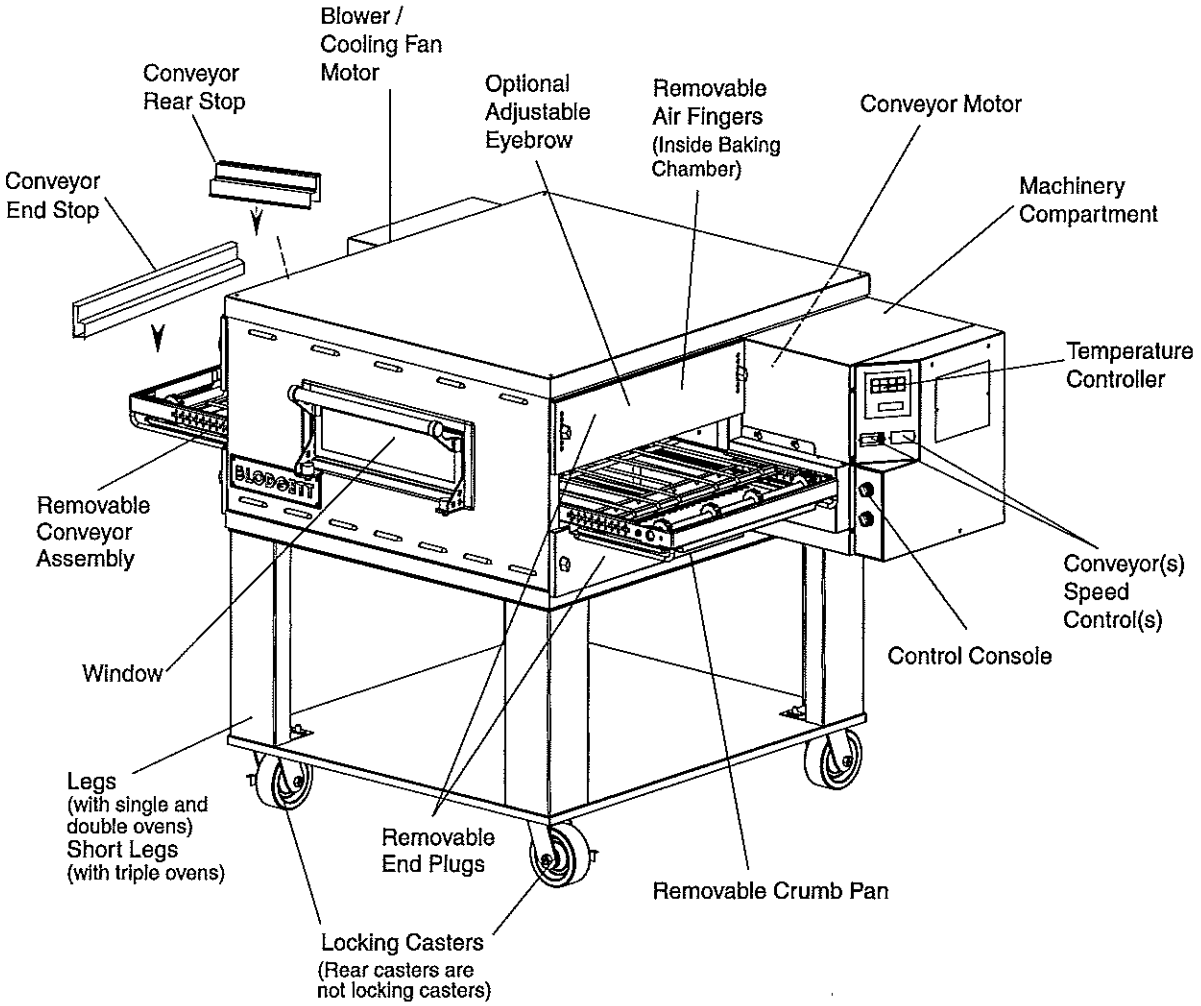

Figure 4-21.

F. Conveyor Reassembly Into Oven

1. Lift conveyor and position it in oven as shown.

NOTE: Conveyor assembly may be inserted into either end of oven. If it is to be installed from the non-drive end of the oven the drive sprocket assembly must be removed as shown in conveyor disassembly section.

NOTE: Split belt conveyors can only be inserted from the drive end of the oven.

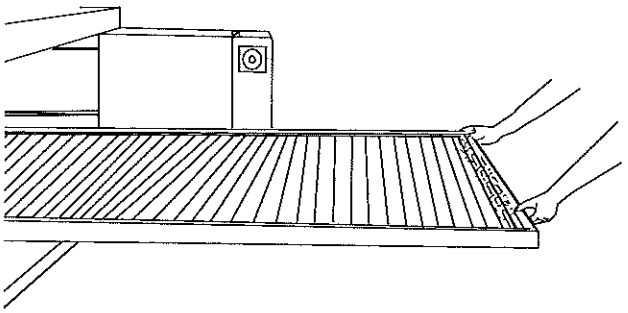

Figure 4-22.

2. Reinstall the conveyor rear stop. Reinstall the conveyor end stop.

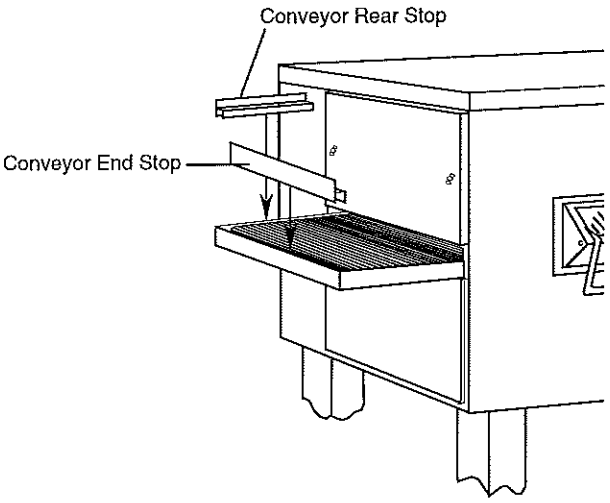

Figure 4-23.

G. Checking Conveyor Belt Tension

> **WARNING**
>
> Oven conveyor belt must be cool when adjusting belt. Do not adjust belt if HOT.

1. With the conveyor assembly in the oven, stand at one end of conveyor and check tension by lifting the conveyor belt at the center of the oven chamber opening. The belt should not lift higher that 3″ to 4″ (75mm to 102mm).

2. Adjust conveyor belt tension screws (located on left end of oven) for the 3″ to 4″ (75mm to 102mm) deflection as shown in Figure 4-26. If there is proper tension, proceed to "J. Attaching Drive Chain". If belt is still too loose, continue to step 3 below.

3. If conveyor belt is still not under proper tension, an entire link must be removed. Use the following procedure "H. Conveyor Belt Link Removal" to remove a link. If conveyor belt is under proper tension proceed directly to "J. Attaching Drive Chain".

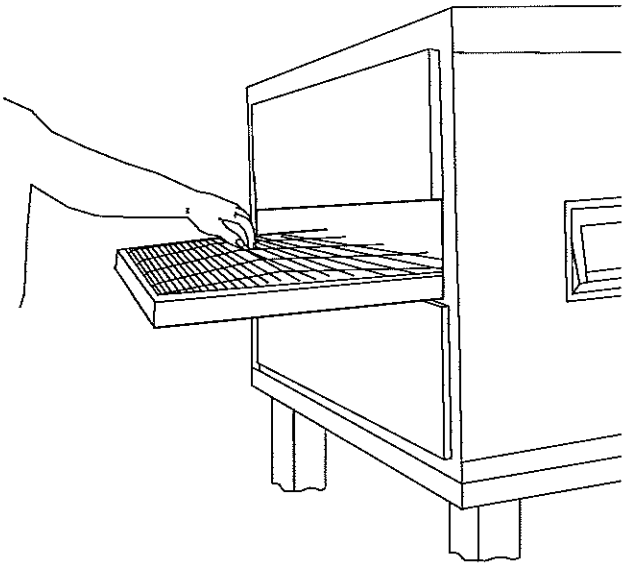

Figure 4-24.

H. Conveyor Belt Link Removal

1. Using long nose pliers, an entire link can be removed with the conveyor assembly either in or out of the oven. Position master links at end of conveyor as shown in Figure 4-25.

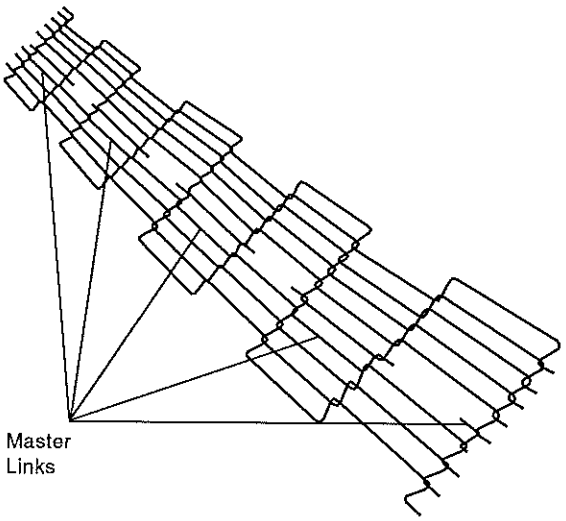

Figure 4-25.

2. Using long nose pliers, unhook master links at left end of conveyor as shown in Figure 4-26.

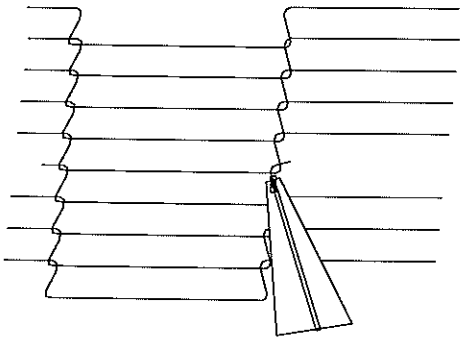

Figure 4-26.

3. Remove the outside master links on the right and left sides of the conveyor belt as shown in Figure 4-27.

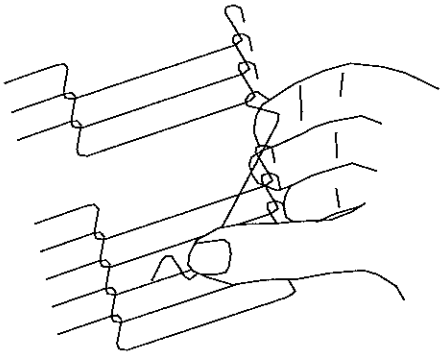

Figure 4-27.

4. Unhook the link to be removed.

5. Pull up on the belt link section and remove. Do not discard the link removed as it may be used for making spare master links.

NOTE: If a section of the conveyor belt is being replaced it should be done now. Remove the links that need replacing and use the section of conveyor belt furnished in your installation kit to replace them.

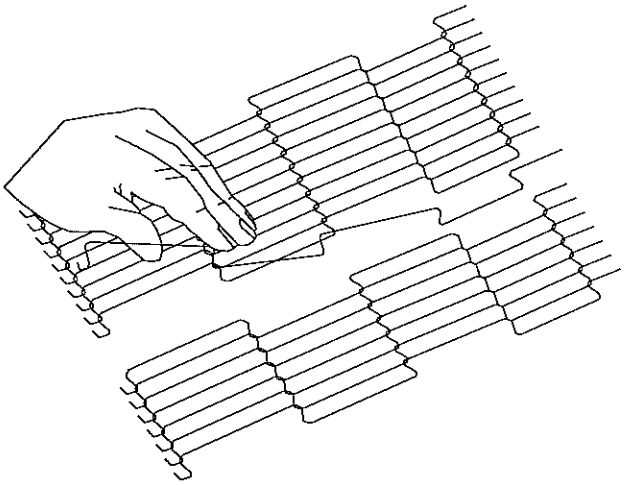

Figure 4-28.

NOTE: Before connecting the inside master links, notice that these links have a correct position (Figure 4-29). The link at the right is in the correct (horns up) position for inserting into the conveyor belt. The horns facing down are in the incorrect position.

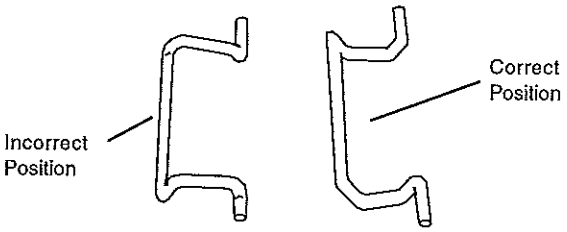

Figure 4-29.

6. Reconnect the inside master links (Figure 4-30.)

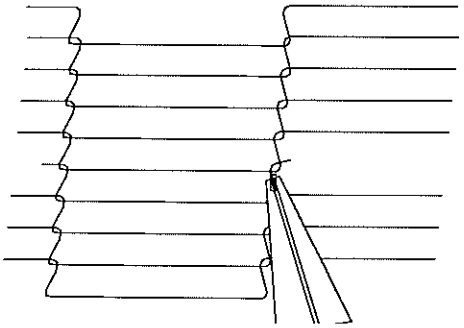

Figure 4-30.

NOTE: The outside master links have right and left sides to them. The right edge master link has an open hook facing you as shown in Figure 4-31. This will match up with the outer edges of the conveyor belt. Remember this hook travels backwards on the conveyor.

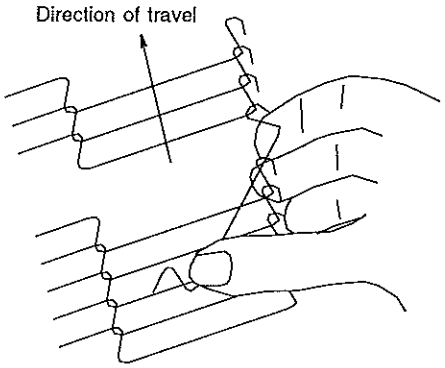

Figure 4-31.

7. Reconnect the outside master links.
8. Replace all parts removed from the oven.

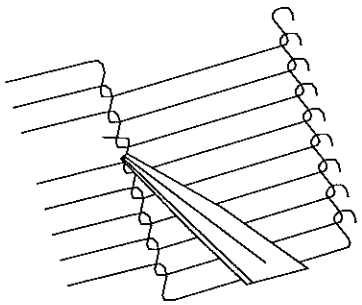

Figure 4-32.

I. Replacing Conveyor Belt

If a section of the conveyor belt needs replacing it can be done with the conveyor assembly either in or out of the oven. The section of the conveyor belt furnished with the oven in the installation kit may then be used to replace a section. Follow the preceding procedure "H. Conveyor belt link removal" which outlines the disassembly procedure.

J. Attaching Drive Chain

1. If drive sprocket assembly was removed reassemble it into the conveyor drive shaft. Be sure flat on end of drive shaft aligns with set screw in conveyor shaft collar. Once in place tighten 3/32" set screw.

2. Lift conveyor and install drive chain to conveyor drive sprocket and motor sprocket.

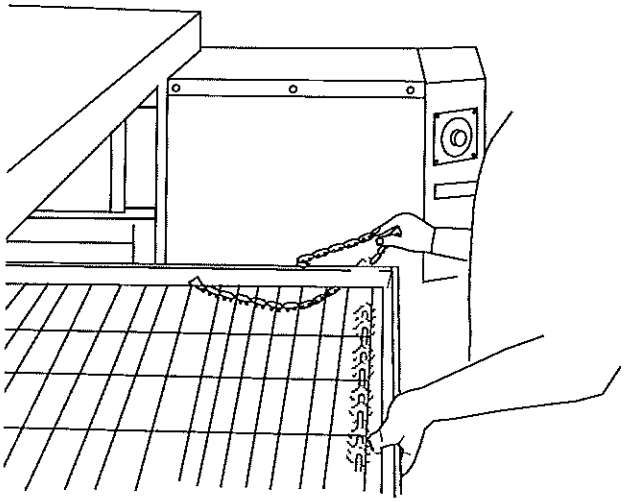

Figure 4-33.

3. The angle plate located on the underside of the conveyor must be against the lower end plug. This is true on both sides of oven.

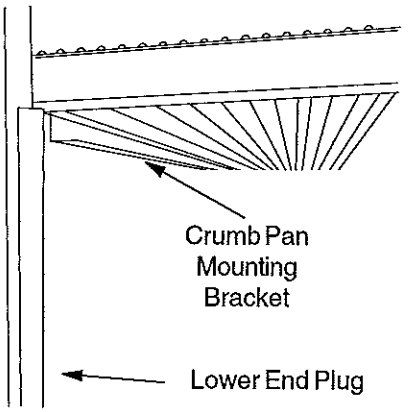

Figure 4-34.

4. Reassemble conveyor drive chain cover and then reassemble the bottom cover to the drive chain cover.

Install both upper end plugs.

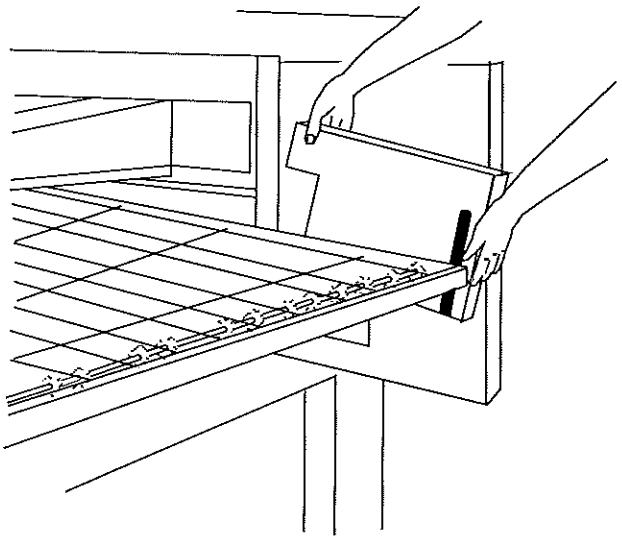

Figure 4-35.

III. MAINTENANCE - EVERY 3 MONTHS

WARNING

Shut OFF all electrical power and lock/tag out the switch before attempting maintenance work.

Shut OFF gas supply to oven.

NOTE: It is recommended that the 3-month maintenance be performed by an authorized Middleby Marshall technician.

A. Cleaning the Blower/Fan Motor

To gain access to the blower/fan motor, open the control cabinet door by removing the three screws. Clean the motor, burner blower motor, the conveyor drive motor and the surrounding area, using either compressed air or CO_2. Thoroughly blow out the motor compartment and vents inside the motor (Figure 4-38). Failure to do this can cause premature failure of blower fan motor.

CAUTION

Not cleaning the blower/fan motor properly can cause premature failure.

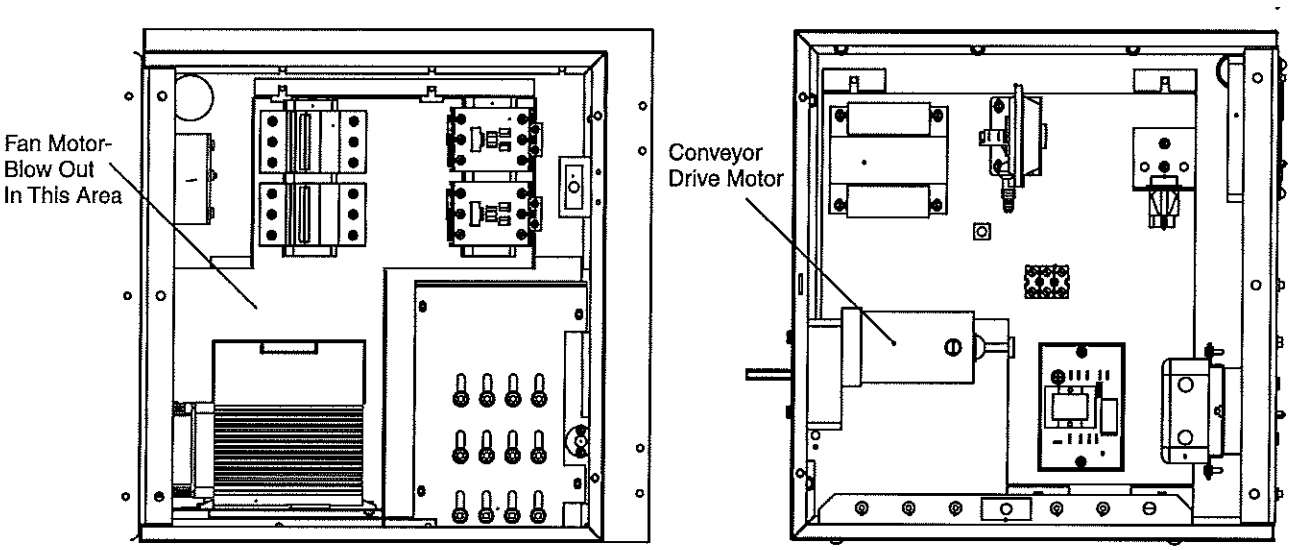

Figure 4-36.

B. Electrical Terminals

Open the control cabinet door by removing the three screws from the control cabinet door. Tighten all electrical control terminal screws including the electrical contactor terminal screws as shown in Figure 4-37.

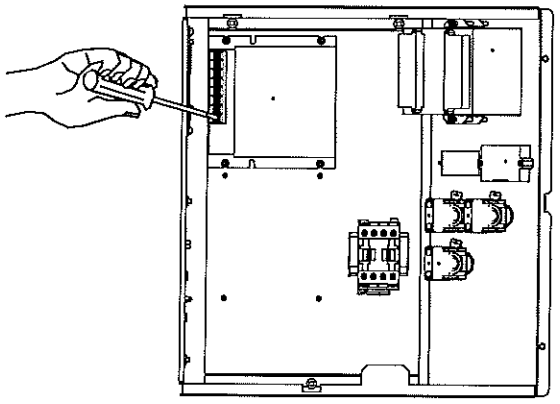

Figure 4-37.

C. Ventilation

Check that the air circulation throughout the oven is not blocked and is working properly.

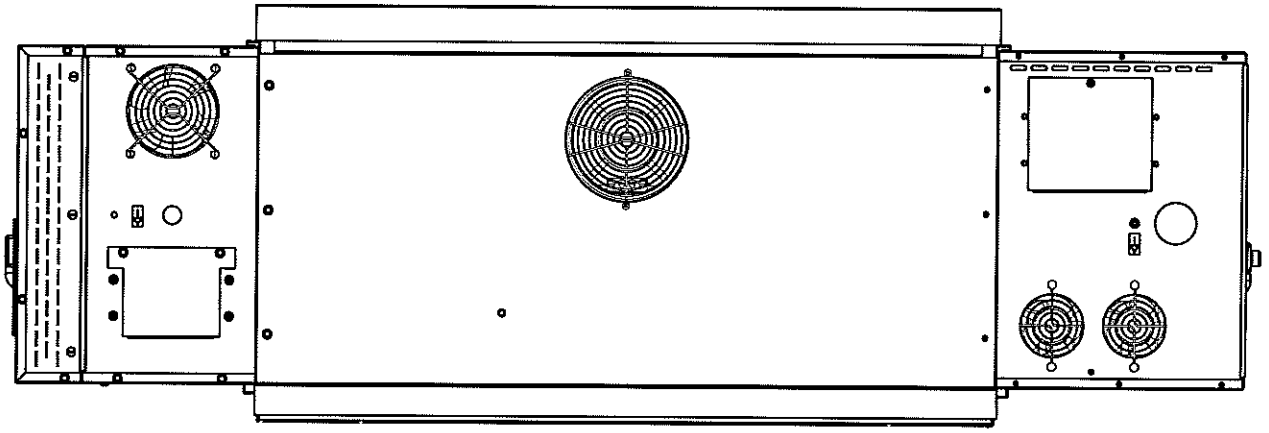

Figure 4-38.

D. Split-belt Conveyor Shaft Cleaning

It is very important that the split-belt conveyor drive and idler shafts are removed from the conveyor frame for cleaning and lubrication.

> **CAUTION**
>
> **Use a turbine oil or light machine oil. DO NOT USE WD40 or similar product. These oils evaporate and cause the shafts to seize.**

1. Perform the conveyor removal steps described in Monthly Maintenance, paragraph "A". After the conveyor is removed, lay it on a flat surface.

2. Remove the two conveyor belts by disassembling the conveyor master links, as described in Monthly Maintenance, paragraph "H". Then, remove the two conveyor belts by rolling them up.

3. Remove the conveyor adjustment bolts to allow the idler brackets to swing free.

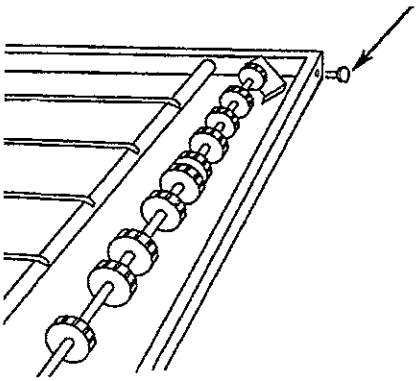

Figure 4-39.

4. Drop the idler shaft assembly clear of the frame through the front frame slot.

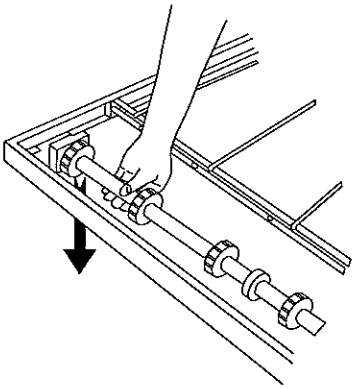

Figure 4-40.

5. Pull the front and rear shafts apart and apply oil to both the extended shaft and the interior of the hollow shaft. Using a rag, wipe oil off parts. Repeat until shafts are clean. Apply more oil to shafts then reassemble.

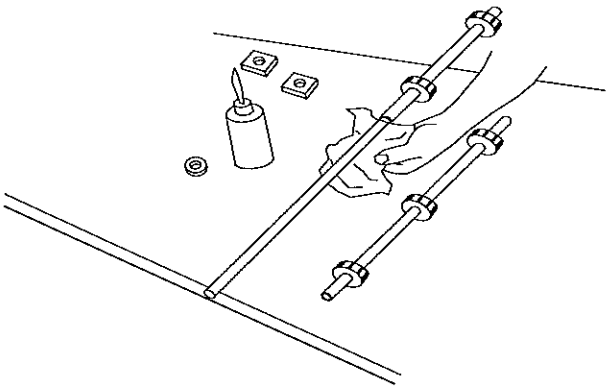

Figure 4-41.

6. Make sure bronze washer is in between the two halves.

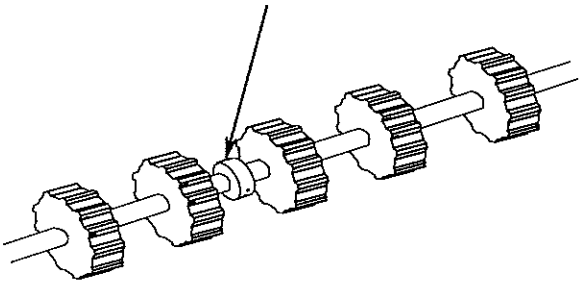

Figure 4-42.

7. Place the idler shaft assembly back into place and reinstall the adjustment screws.

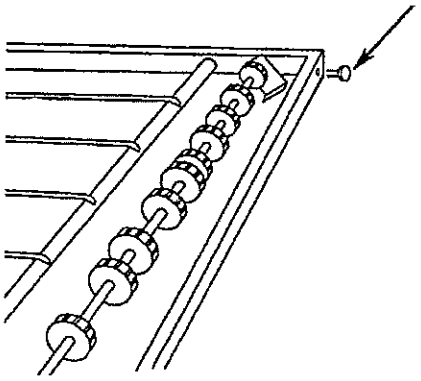

Figure 4-43.

8. Loosen the set screw on each conveyor drive sprocket and remove sprockets.

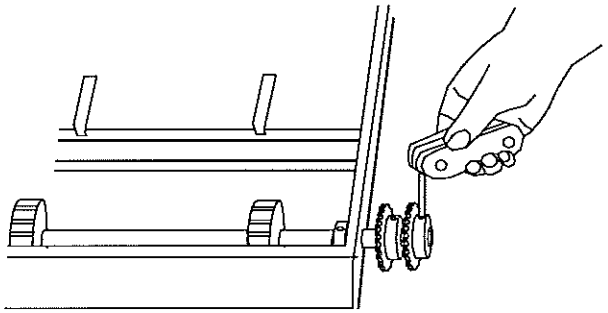

Figure 4-44.

9. Loosen the split locking collar.

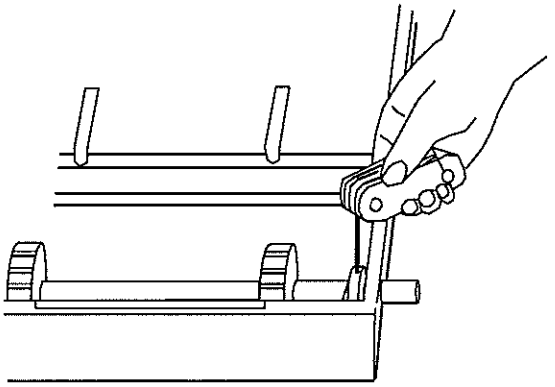

Figure 4-45.

10. Remove drive shafts by sliding to right then lifting the left side. Follow cleaning and lubricating procedures outlined in Steps 4-6.

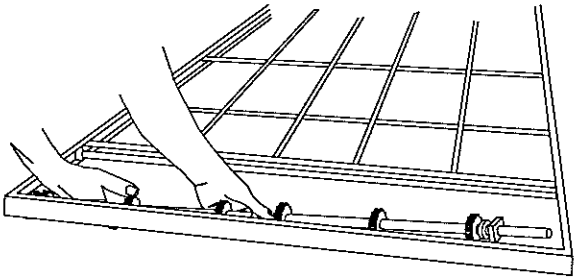

Figure 4-46.

11. Reassemble conveyor drive shafts into frame, making sure nylon spacer is in place.

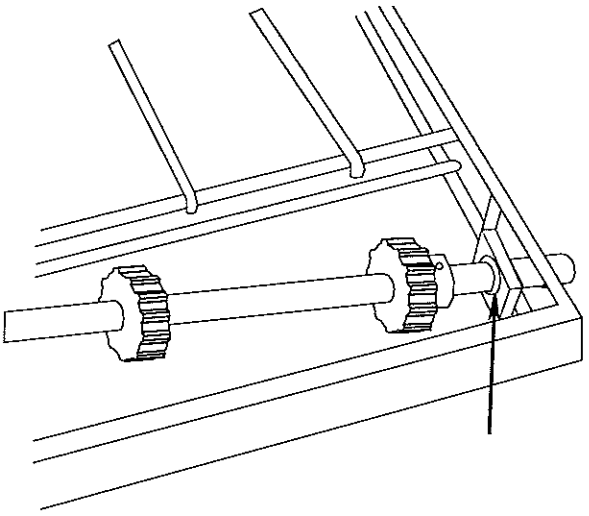

Figure 4-47.

12. Slide shaft assembly to right side, holding assembly in place. Slide split locking collar to the left side and tighten.

13. Slide rear conveyor drive sprocket onto shaft. Tighten the set screw of this drive sprocket until it extends into the hole of the hollow shaft. It **should NOT** touch the inner, solid shaft. Check to see that only the rear shaft moves when the sprocket is turned. If both shafts move, you have tightened the set screw too tight. Loosen the set screw until only the rear shaft moves when the sprocket is turning.

14. Insert adaptor bushing into remaining drive sprocket then place onto shaft. Make sure nylon spacer is in place. Tighten set screw making sure screw goes through slot in adaptor bushing and locks onto shaft.

15. Thread conveyor belts back onto frame making sure the links will be traveling in the proper direction.

16. Follow conveyor reassembly instructions in Monthly Maintenance Paragraph "F".

NOTE: It is recommended that the 6 Month Maintenance schedule be performed by a Middleby Marshall authorized service technician.

IV. MAINTENANCE - EVERY 6 MONTHS

A. Check brushes on D.C. conveyor motor, when worn to less than 1/10" (2.4mm), replace the brushes.

B. Clean and inspect the burner nozzle and electrode assembly. Also check your oven venting system.

C. Check conveyor shaft bushings and spacers. Replace them if they are worn. See Figure 6-5, Conveyor Exploded Drawing, items 15, 30 and 31 or Figure 6-6, Split Belt Conveyor, items 19, 23, 31, 35 and 36.

IMPORTANT NOTICES:

- Installation of replacement parts requiring access to the interior of the oven is permitted only by an authorized service technician.
- If there are any problems with the operation of the oven, the authorized service technician must be called.
- It is suggested to obtain a service contract with a manufacturer's authorized service technician.

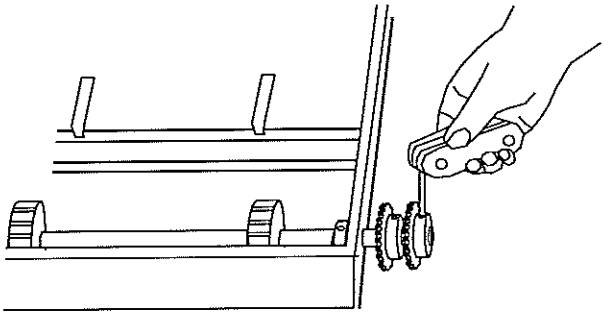

Figure 4-48.

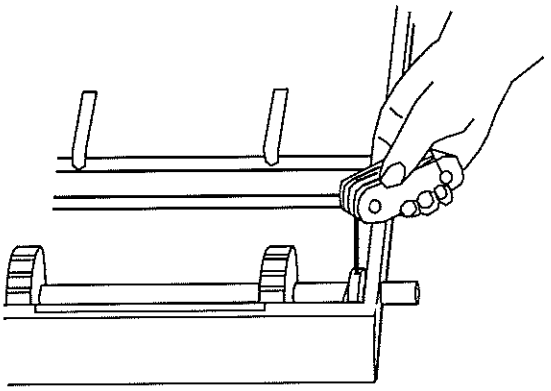

Figure 4-49.

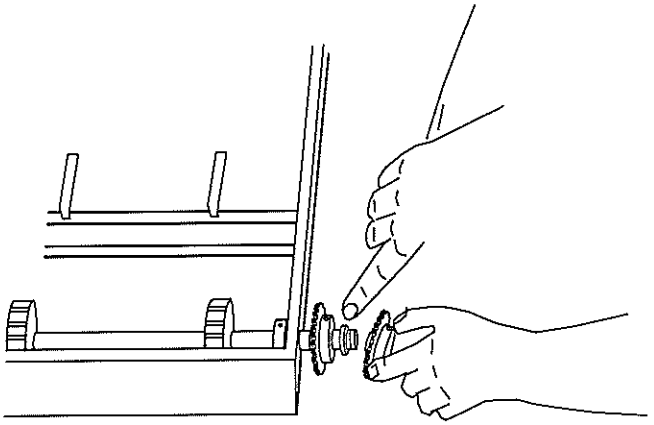

Figure 4-50.

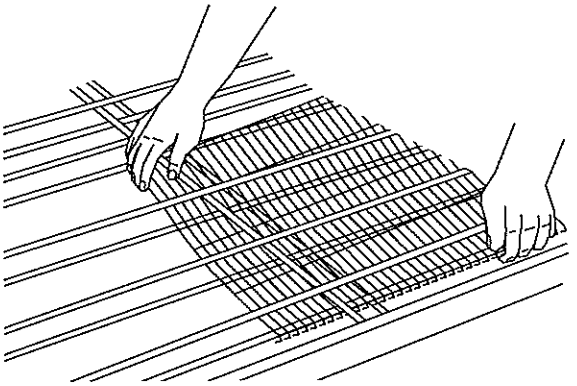

Figure 4-51.

KEY SPARE PARTS KIT

An oven can be purchased with a Key Spare Parts Kit (Figure 4-52). (The kit can be purchased when the oven is ordered, or later, from a Blodgett Authorized Parts Distributor). The kit contains many of the crucial parts that can reduce serious downtime and loss of production, if a failure occurs.

Replacement parts for this kit can be purchased from your Blodgett Authorized Parts Distributor.

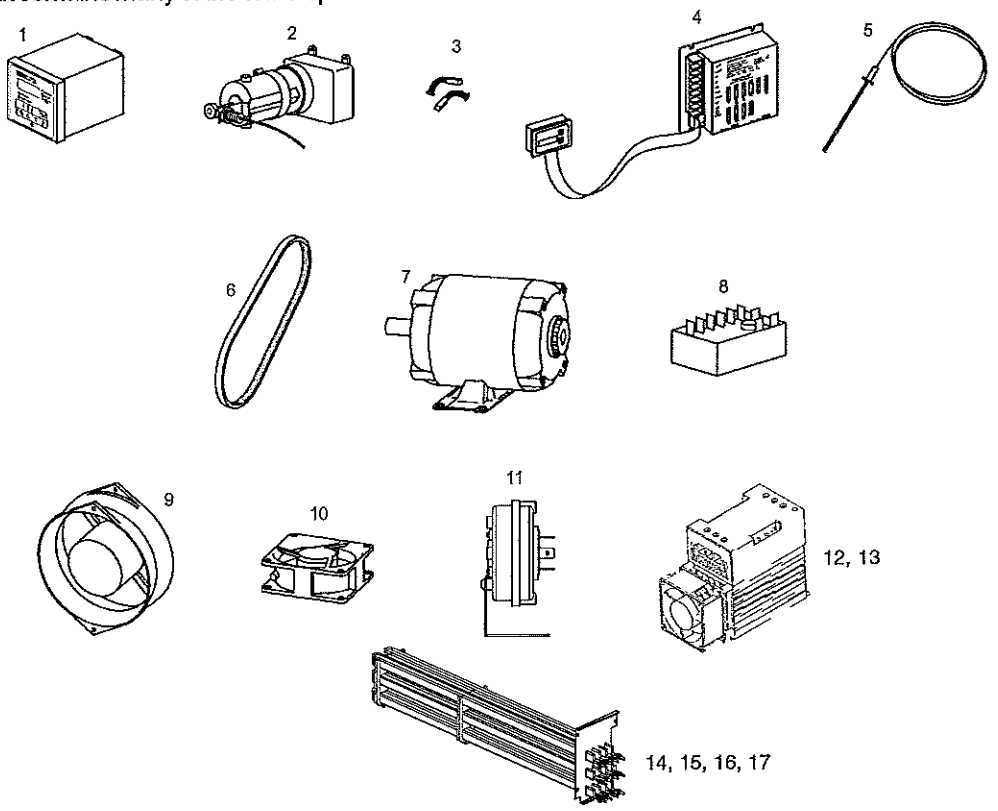

ITEM	QTY.	P/N	DESCRIPTION
1	1	47321	DIGITAL TEMPERATURE CONTROLLER
2	1	51067	CONVEYOR DRIVE MOTOR W/PICKUP ASSY.
3	2	30153	DRIVE MOTOR BRUSHES
4	1	60542	KIT, CONVEYOR SPEED CONTROLER
5	1	33984	KIT, THERMOCOUPLE 6"
6	1	50517	BELT, BLOWER
7	1	44687	MOTOR, BLOWER, 208/230V, 1/2HP
8	1	33983	HIGH LIMIT CONTROL MODULE, 240V
9	1	36451	COOLING FAN (BACKWALL)
10	1	97525	COOLING FAN (CONTROL COMPARTMENT)
11	1	60836	AIR SWITCH
12	2	44914	CONTROLLER, POWER 208V/240V
13	2	44568	CONTROLLER, POWER 380V/480V
14	1	58238	HEATER 208V 17kW
15	1	50232	HEATER 240V 17kW
16	1	50587	HEATER 380V 17kW
17	1	50589	HEATER 480V 17kW

SECTION 5
TROUBLESHOOTING

PROBLEM: PRODUCTS ARE OVERCOOKED OR UNDERCOOKED

- Check for correct setting of conveyor speed control.
  - Set the conveyor speed control at correct setting.
- Check for correct setting on temperature controller.
  - Turn temperature control to correct setting.
- Verify the food preparation process.
- If products still cook incorrectly, call your Blodgett Service Agency.

PROBLEM: OVEN DOES NOT HEAT

- Check to see if both BLOWER/HEAT switch are in the "ON" or "I" position.
- If oven does not heat, call your Blodgett Service Agency.

PROBLEM: BLOWER MOTOR IS RUNNING, YET LITTLE OR NO AIR BLOWS FROM AIR FINGERS

- Air fingers reassembled incorrectly, after cleaning.
- Assemble air fingers correctly, after cleaning. Refer to Section 4 procedure, or call your Blodgett Service Agency.

PROBLEM: OVEN BLOWER AND CONVEYOR OPERATE, YET THE OVEN IS NOT HEATING

- Reset the temperature controller to a new setting (above 200°F), after turning the BLOWER/HEAT switch to off for 30 seconds.
- Start the oven again. If the oven still does not heat, call your Blodgett Service Agency.

PROBLEM: CONVEYOR WILL NOT HOLD PROPER SPEED OR WILL NOT RUN AT ALL

- Check whether the conveyor is jammed on something in oven.
- Check for proper tension of conveyor drive chain and conveyor belt. Refer to Section 4 for correct procedure.
- Check that the conveyor drive sprocket is tight.
- If conveyor still does not run correctly, contact your Blodgett Service Agency.

PROBLEM: OVEN DOES NOT TURN ON WHEN ITS SWITCHES ARE TURNED ON

- Check that all electric supply switches are set to the "ON" or "I" position. Then, start the oven.
- If oven still will not start, contact your Blodgett Service Agency.

NOTES

SECTION 6 - PARTS LIST

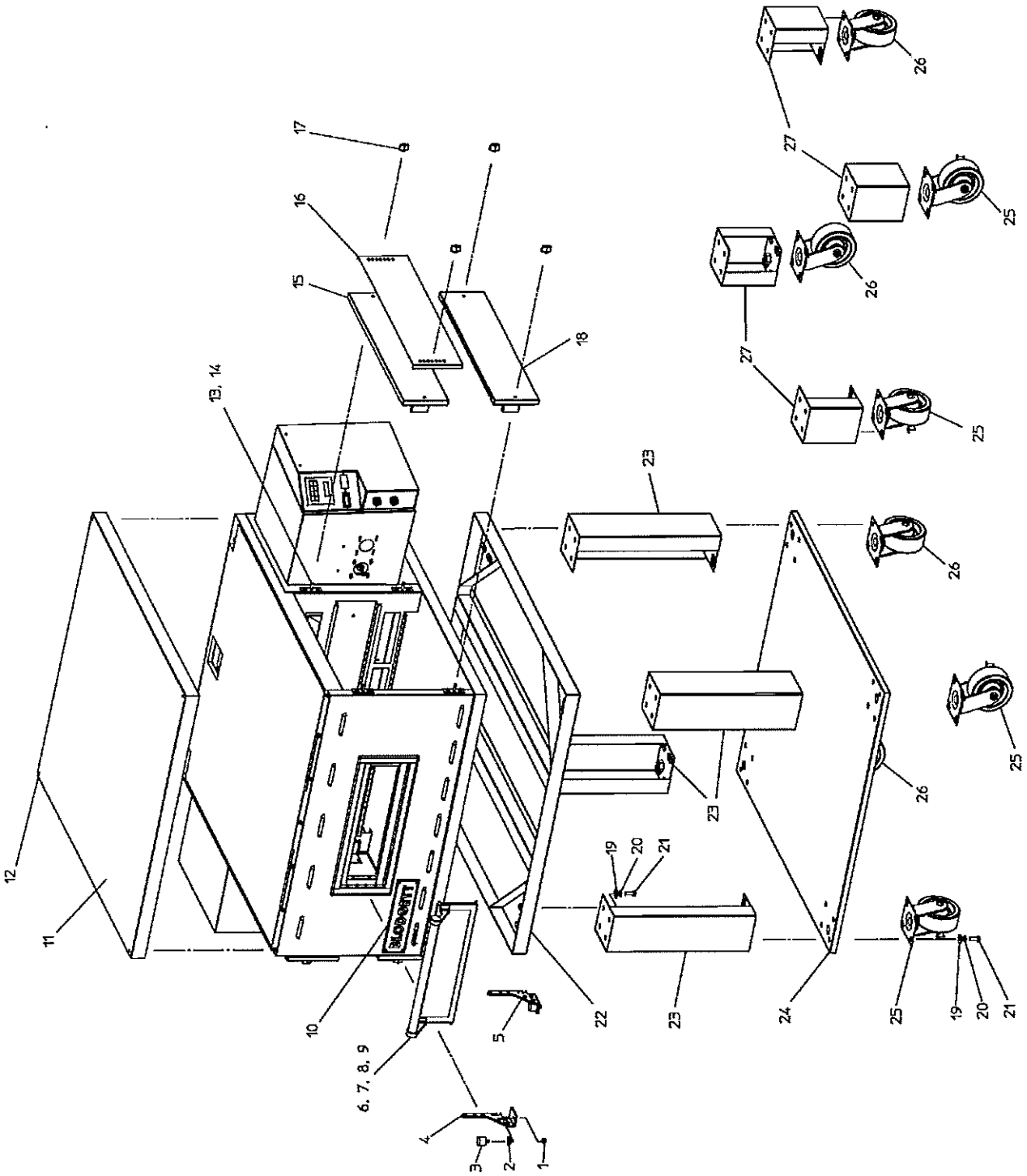
12
11
10
6, 7, 8, 9
4
3
2
1
5
22
23
24
25
19
20
21
13, 14
15
16
17
18
26
27

OVEN PANELS, WINDOW AND LEGS

ITEM	QTY.	P/N	DESCRIPTION
1	2	A30241	NUT, 1/4-20 18-8 NYL INS L/N
2	2	A27750	WASHER, FLAT .531X1.00X.062
3	2	30927	BUMPER, WINDOW
4	1	51210	BRKT, WINDOW HINGE & STOP LEFT
5	1	51211	BRKT, WINDOW HINGE & STOP RIGHT
6	1	51087	WLDMT, GLASS FRAME WINDOW
7	1	M10092	HANDLE, WINDOW
8	1	M1115	BRACKET, LT WINDOW HANDLE
9	1	M1116	BRACKET, RT WINDOW HANDLE
10	1	45739	NAMEPLATE, MM
11	1	48605	PANEL,ROOF
12	4	21256-0008	SCR,10-32X3/8 18-8 SL TRUS S
13	8	48640	ASSY, END PLUG MOUNTING PS536
14	16	21296-0005	SCR, HX WSHHD 12-14X3/4 SS BSD
15	2	50161	ASSY, END PLUG TOP PS536
16	2	42771	SLIDE, OUTER SIDE PS536
17	16	36452	NUT, WING-PLASTIC 1/4-20
18	2	48622	ASSY, END PLUG PS536
19	32	21416-0001	WASHER, FLAT SS 3/8
20	32	2001805	WASHER, LOCK 3/8M 18-8 REG
21	32	220373	SCR, HH 3/8-16X1 SST
22	1	42893	WLDMT, BASE
23	4	42890	WLDMT, LEG 17.56
24	1	46393	BOTTOM, CART
25	2	22290-0009	CASTER, SWVL W/BRAKE FLAT PLATE
26	2	22290-0010	CASTER, SWVL FLAT PLATE
27	4	44799	WLDMT, LEG 6"

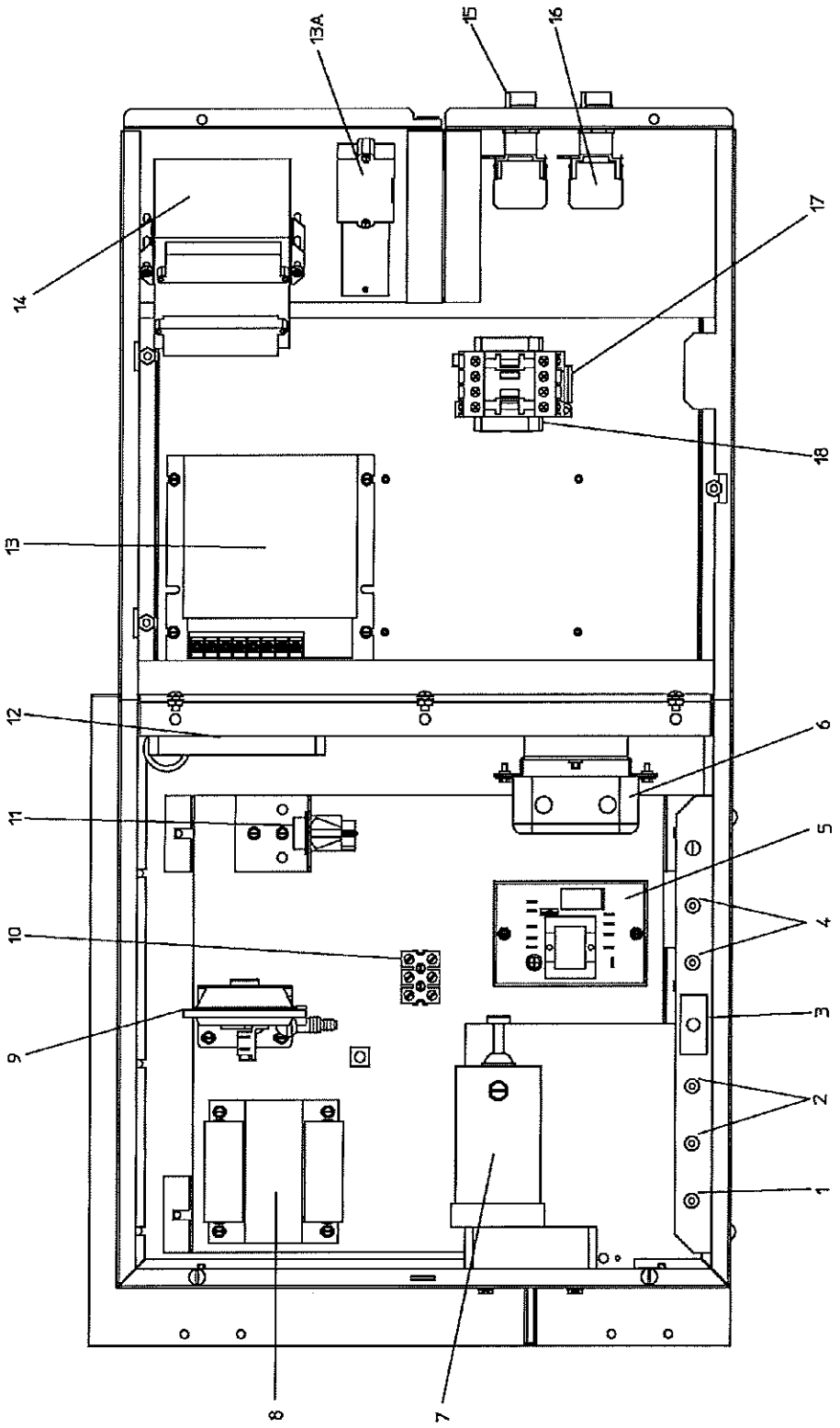
13A
15
16
14
17
18
13
12
6
11
5
10
4
9
3
2
1
8
7

CONTROL PANEL

ITEM	QTY.	P/N	DESCRIPTION
1	1	48635	BREAKER, CIRCUIT 240V 0.3A
2	2	46831	BREAKER, CIRCUIT 240V 8A
3	1	28021-0047	SWITCH, INTLCK 10A NO2P
4	2	45036	BREAKER, CIRCUIT 240V 3A
5	1	33983	CNTRL, ELEC HI-LIMIT 240V
6	1	33813	FILTER, RFI TYPE F1780DD20
7	1 OR 2	3002757	MOTOR, CONVEYOR DRIVE
8	1	31504	TFMR, 230V(P) / 120V(S) 200VA
9	1	60836	SWITCH, AIR .13 IN. WC
10	1	44390	BLOCK, TERM 600V 50A 3 POLE
11	1	35145	SWITCH, PB MOLVENO 250V
12	1	97525	FAN, 230V
13	1 OR 2	60542	KIT, CONVEYOR SPEED CONTROLLER P WITH DIGITAL DISPLAY (INC. ITEM 13A)
13A	1 OR 2	37503	DIGITAL DISPLAY ONLY
14	1	50990	CONTROL, COMBO 4-20MA, BURST
15	3	44696	SWITCH, ROTARY & MTG ADAPTOR
16	3	44697	BLOCK, CONTACT
17	1	28041-0011	CONTACTOR, 208/240V
18	2	33363	END, STOP ENTRELEC

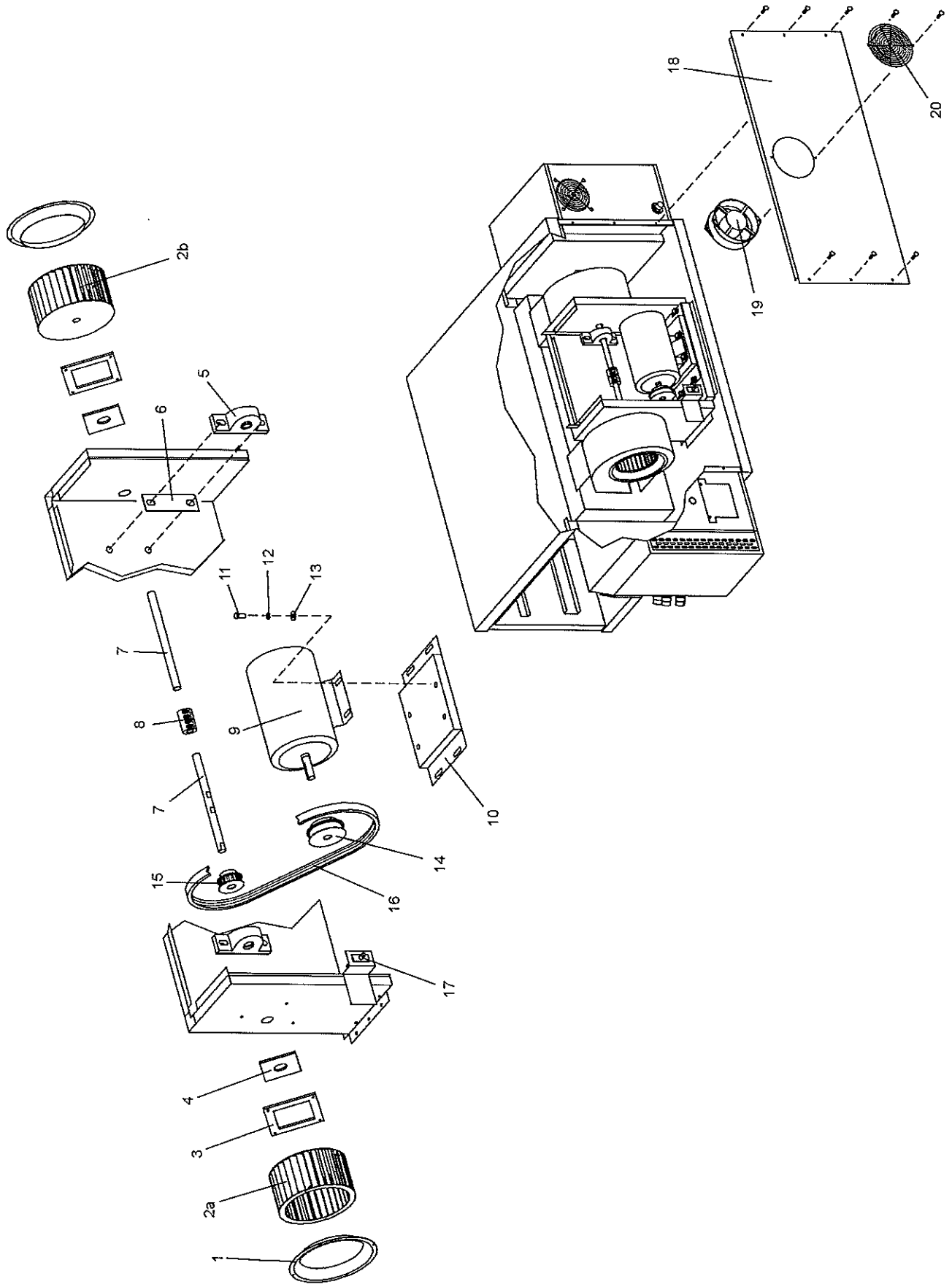
1
2a
3
4
17
15
16
14
7
8
9
10
7
11
12
13
6
5
2b
18
19
20

BLOWER AND SHROUD

ITEM	QTY.	P/N	DESCRIPTION
1	2	42951	INLET RING
2a	1	42752	BLOWER WHEEL, RIGHT (VIEWED FROM REAR OF OVEN)
2b	1	42753	BLOWER WHEEL, LEFT (VIEWED FROM REAR OF OVEN)
3	2	42999	RETAINER, TEFLON SEAL
4	2	35121-0045	TEFLON SEAL
5	2	22072-0025	BEARING, 5/8" BORE WITH STANDARD GREASE
--	--	17110-0015	GREASE, MM STANDARD CARTRIDGE
6	2	50160	GASKET, BEARING
7	2	50151	BLOWER SHAFT
8	1	44748	COUPLING, BLOWER SHAFT
9	1	44687	MOTOR, BLOWER, 208/230V, 1/2HP
10	1	44688	PLATE, MOTOR MOUNTING

ITEM	QTY.	P/N	DESCRIPTION
11	4	A11687	SCREW, HEX CAP HEAD 5/16"-18 X 7/8"
12	4	B301A8847	FLAT WASHER, 5/16"
13	4	A3682	LOCK WASHER, 5/16"
14	1	50256	KIT, RPM, (50/60Hz) CONTAINS SHEAVE (50260) WITH BUSHING (50259)
15	1	50224	PULLEY, BLOWER SHAFT
16	1	50517	BELT, (50/60Hz)
17	1	28021-0061	SAFETY SWITCH
18	1	47633	BACK WALL
19	1	36451	COOLING FAN
20	1	31497	FINGER GUARD, COOLING FAN

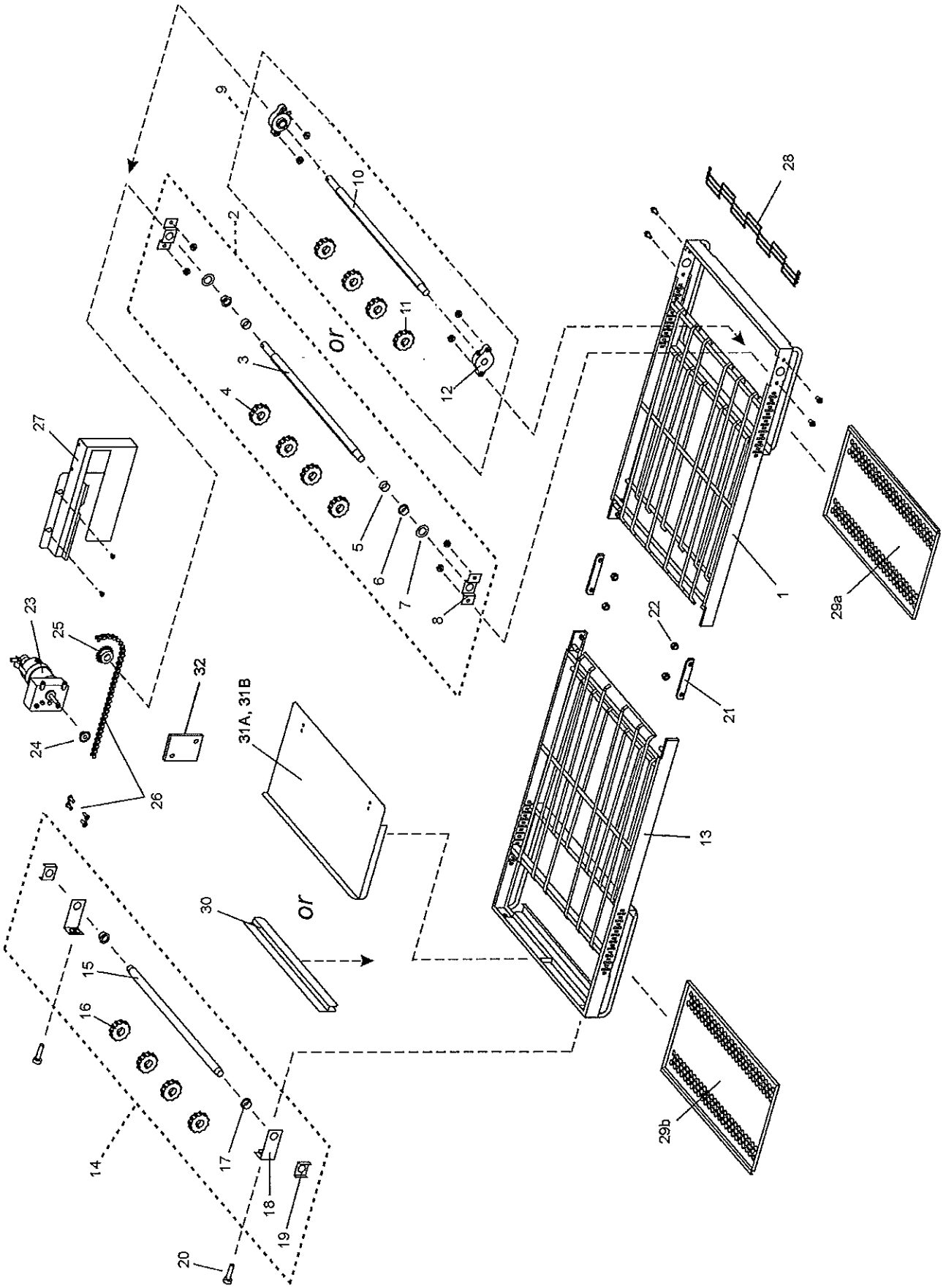
1
2
3
4
5
6
7
8
9
10
11
12
13
14
15
16
17
18
19
20
21
22
23
24
25
26
27
28
29a
29b
30
31A, 31B
32
or
or

CONVEYOR

ITEM	QTY.	P/N - 60" CONVEYOR	P/N - 56" CONVEYOR	DESCRIPTION
1	1	48847	48847	FRAME, DRIVE SIDE
2	1	< - - - -	48797	ASSEMBLY, STANDARD DRIVE SHAFT (INC. ITEMS 3-8)
3	1	< - - - -	48781	DRIVE SHAFT
4	4	< - - - -	22229-0003	SPROCKET, CONV. BELT
5	2	< - - - -	43275	SPACER
6	2	< - - - -	22034-0003	BUSHING, BRONZE 5/8" I.D.
7	2	< - - - -	35000-1080	SPACER, NYLON
8	2	< - - - -	49972	BRACKET, DRIVE SUPPORT
9	1	< - - - -	48782	ASSEMBLY, HIGH SPEED DRIVE SHAFT (INC. ITEMS 10-11)
10	1	< - - - -	48781	DRIVE SHAFT
11	4	< - - - -	22229-0003	SPROCKET, CONV. BELT
12	2	< - - - -	45377	FLANGE BEARING (HIGH SPEED ONLY)
13	1	48746	48784	FRAME, IDLER SIDE
14	1	48780	50032	ASSEMBLY, IDLER SHAFT (INC. ITEMS 15-19)
15	1	< - - - -	48779	IDLER SHAFT
16	4	< - - - -	22229-0003	SPROCKET, CONV. BELT
17	2	< - - - -	22034-0003	BUSHING, BRONZE 5/8" I.D.
18	2	37000-0413	50033	BRACKET, IDLER ADJUSTMT.
19	2	< - - - -	35900-0020	BRACKET, IDLER SUPPORT
20	2	35000-1008	50028	SCREW, IDLER ADJUSTMENT
21	2	< - - - -	35900-0398	PIVOT PLATE

ITEM	QTY.	P/N - 60" CONVEYOR	P/N - 56" CONVEYOR	DESCRIPTION
22	4	< - - - -	21176-0002	LOCKNUT, HEX 3/8"-16 SS
23	1	< - - - -	51067	ASSEMBLY, CONVEYOR MOTOR AND PICKUP (INC. ITEM 23a)
23a	1	< - - - -	50163	PICKUP
24a	1	< - - - -	34128	SPROCKET, CONVEYOR DRIVE MOTOR, 20T (STANDARD)
25	1	< - - - -	22159-0003	SPROCKET, CONVEYOR DRIVE SHAFT, 20T
26	1	50050	50050	ASSEMBLY, DRIVE CHAIN (INC. ITEM 26a)
26a	1	< - - - -	3101212	MASTER LINK, DRIVE CHAIN
27a	1	48851	48851	ASSEMBLY, CHAIN COVER-FOR OVENS WITH RIGHT SIDE CONTROLS
27b	1	<--- Not available		ASSEMBLY, CHAIN COVER-FOR OVENS WITH LEFT-SIDE CONTROLS
28a	1	50057	50055	BELT, CONVEYOR, 18"/457mm, STANDARD
28b	1	50057	50055	BELT, CONVEYOR, 18"/457mm, HIGH SPEED
29a	1	48707	48706	CRUMB PAN, DRIVE SIDE
29b	1	48707	48707	CRUMB PAN, IDLER SIDE
30	1	50044	50044	END STOP (STD. ON 76" CONVEYOR, *OPT. ON 60" & 56")*
31a	1	50040	50040	EXIT TRAY, 8"/203mm (STD. ON 60" & 56" CONVEYORS, *OPT. ON 76")*
31b	1	50023	50023	EXIT TRAY, 20"/508mm *(OPT. ON ALL CONVEYORS)*
32	1	50235	50235	PLATE MOTOR COVER ASSY

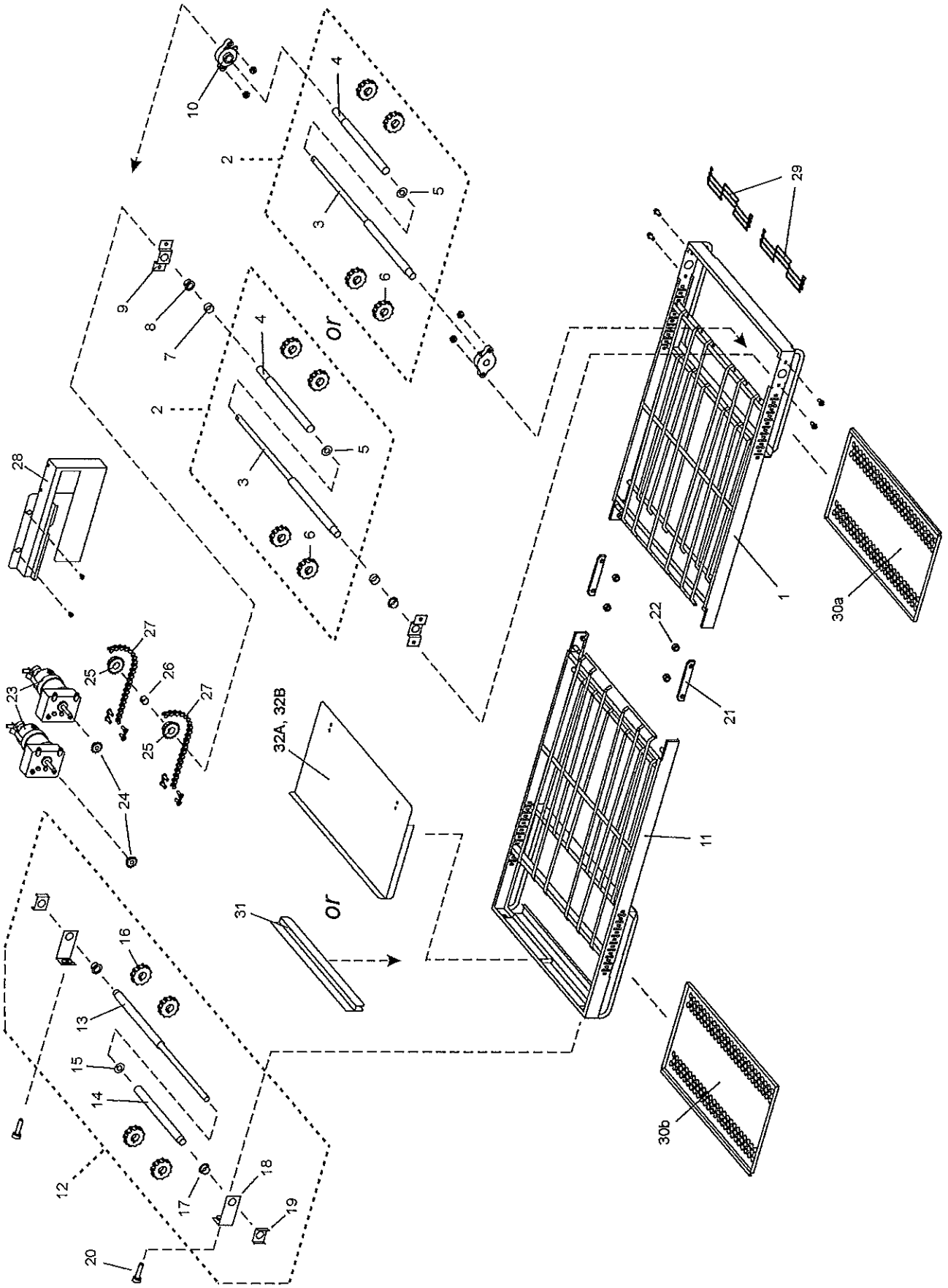
10
2
4
3
5
6
9
8
7
2
4
3
5
6
or
28
27
25
26
27
25
23
24
32A, 32B
or
31
16
13
15
14
12
17
18
19
20
29
29
1
30a
22
21
11
30b

SPLIT BELT CONVEYOR

ITEM	QTY.	P/N - 60" CONVEYOR	P/N - 56" CONVEYOR	DESCRIPTION
1	1	48847	48847	FRAME, DRIVE SIDE
2	1	<- - - -	48759	ASSEMBLY, SPLIT DRIVE SHAFT, STANDARD AND HIGH SPEED (INC. ITEMS 3-6)
3	1	<- - - -	49969	SPLIT DRIVE SHAFT - MAIN
4	1	<- - - -	48837	SPLIT DRIVE SHAFT - SLEEVE
5	1	<- - - -	21415-0001	FLAT WASHER, BRONZE
6	4	<- - - -	22229-0003	SPROCKET, CONV. BELT
7	2	<- - - -	43275	SPACER (STANDARD ONLY)
8	2	<- - - -	22034-0003	BUSHING, BRONZE 5/8" I.D. (STANDARD ONLY)
9	2	<- - - -	49972	BRACKET, DRIVE SUPPORT (STANDARD ONLY)
10	2	<- - - -	45377	FLANGE BEARING (HIGH SPEED ONLY)
11	1	48746	48784	FRAME, IDLER SIDE
12	1	48769	50035	ASSEMBLY, SPLIT IDLER SHAFT (INC. ITEMS 13-19)
13	1	<- - - -	49968	SPLIT IDLER SHAFT - MAIN
14	1	<- - - -	48778	SPLIT IDLER SHAFT - SLEEVE
15	1	<- - - -	21415-0001	FLAT WASHER, BRONZE
16	4	<- - - -	22229-0003	SPROCKET, CONV. BELT
17	2	<- - - -	22034-0003	BUSHING, BRONZE 5/8" I.D.
18	2	37000-0413	50033	BRACKET, IDLER ADJUSTMT.
19	2	<- - - -	35900-0020	BRACKET, IDLER SUPPORT
20	2	35000-1008	50028	SCREW, IDLER ADJUSTMENT

ITEM	QTY.	P/N - 60" CONVEYOR	P/N - 56" CONVEYOR	DESCRIPTION
21	2	<- - - -	48755	PIVOT PLATE
22	4	<- - - -	21176-0002	LOCKNUT, HEX 3/8"-16 SS
23	2	<- - - -	51067	ASSEMBLY, CONVEYOR MOTOR AND PICKUP (INC. ITEM 23a)
23a	1	<- - - -	50163	PICKUP
24	2	<- - - -	34128	SPROCKET, CONVEYOR DRIVE MOTOR, 20T (STANDARD)
25	2	<- - - -	22159-0003	SPROCKET, CONVEYOR DRIVE SHAFT, 20T (STANDARD AND HIGH SPEED)
26	1	<- - - -	35900-0023	BUSHING, DRIVE SPROCKET
27a	1	50050	50050	ASSEMBLY, DRIVE CHAIN, REAR BELT (LONG - INC. ITEM 27c)
27b	1	50051	50051	ASSEMBLY, DRIVE CHAIN, FRONT BELT (SHORT - INC. ITEM 27c)
27c	1	<- - - -	3101212	MASTER LINK, DRIVE CHAIN
28	1	48851	48851	ASSEMBLY, CHAIN COVER
29a	2	50056	50054	BELT, CONVEYOR, 9"/229mm, STANDARD
29b	2	50056	50054	BELT, CONVEYOR, 9"/229mm, HIGH SPEED
30a	1	48707	48707	CRUMB PAN, DRIVE SIDE
30b	1	48707	48706	CRUMB PAN, IDLER SIDE
31		50044	50044	END STOP (STD. ON 76" CONVEYOR, *OPT. ON 60" & 56")*
32a	1	50040	50040	EXIT TRAY, 8"/203mm (STD. ON 60" & 56" CONVEYORS, *OPT. ON 76")*
32b	1	50023	50023	EXIT TRAY, 20"/508mm *(OPT. ON ALL CONVEYORS)*

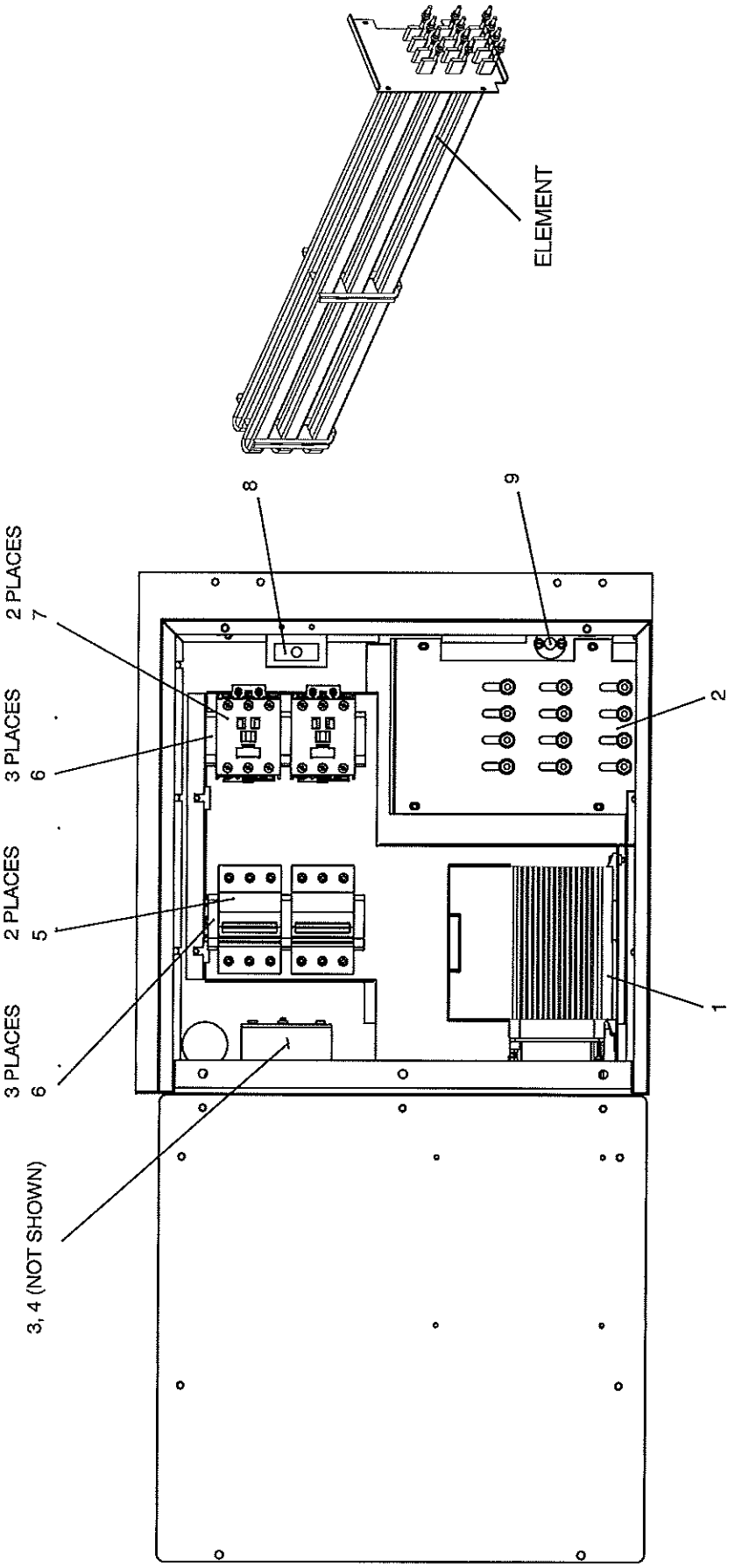
ELEMENT
8
9
2 PLACES
7
3 PLACES
6
2 PLACES
5
3 PLACES
6
3, 4 (NOT SHOWN)
2
1

MACHINERY COMPARTMENT

ITEM	QTY.	P/N	DESCRIPTION
1	2	44914	CONTROLLER, PS555EL 208-240V
1	2	44568	CONTROLLER, PS555EL 380-480V
2	1	58238	WLDMT, HTG ELE 208V 17KW 536ES
2	1	50232	WLDMT, HTG ELE 240V 17KW 536ES
2	1	50587	WLDMT, HTG ELE 380V 17KW 536ES
2	1	50589	WLDMT, HTG ELE 480V 17KW 536ES
3	2	27480-0001	BLOCK, POWER DIST 2POLES 600V
4	1	31589	LUG, TERM LUG-CU/AL 14-2AWG
5	2	45109	BREAKER, CKT 480VAC 63A 3POLE
6	6	33363	END, STOP ENTRELEC
7	2	44549	CONTACTOR, 230V AC COIL 85A
8	1	28021-0047	SWITCH, INTLCK 10A NO2P
9	1	33812-1	TC, TYPE "J" SHIELDED 6.00X120"

NOTES

SECTION 7
ELECTRICAL SCHEMATICS

58214E

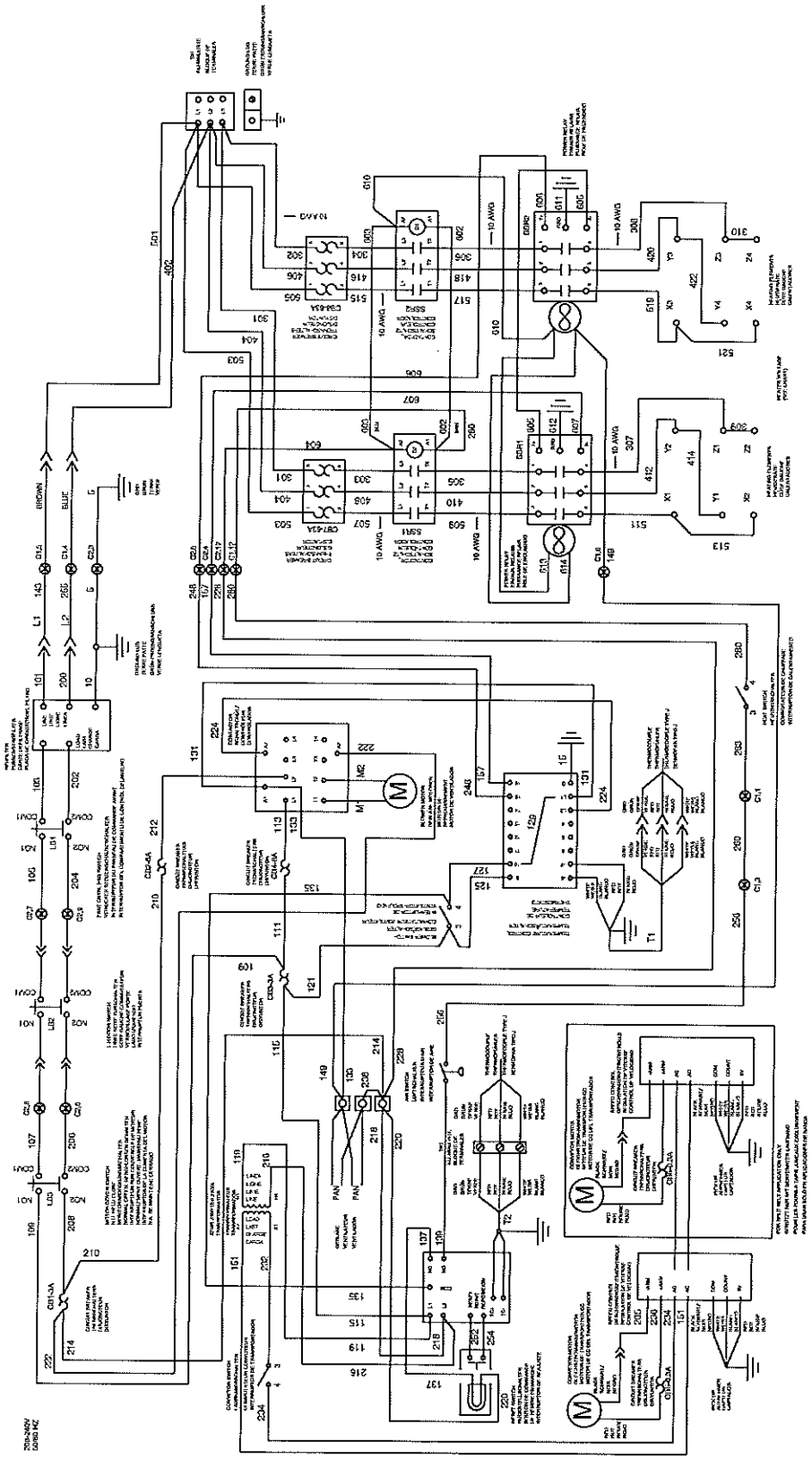

Wiring Diagram, E208-240 50/60, 3PH 4W BE2136

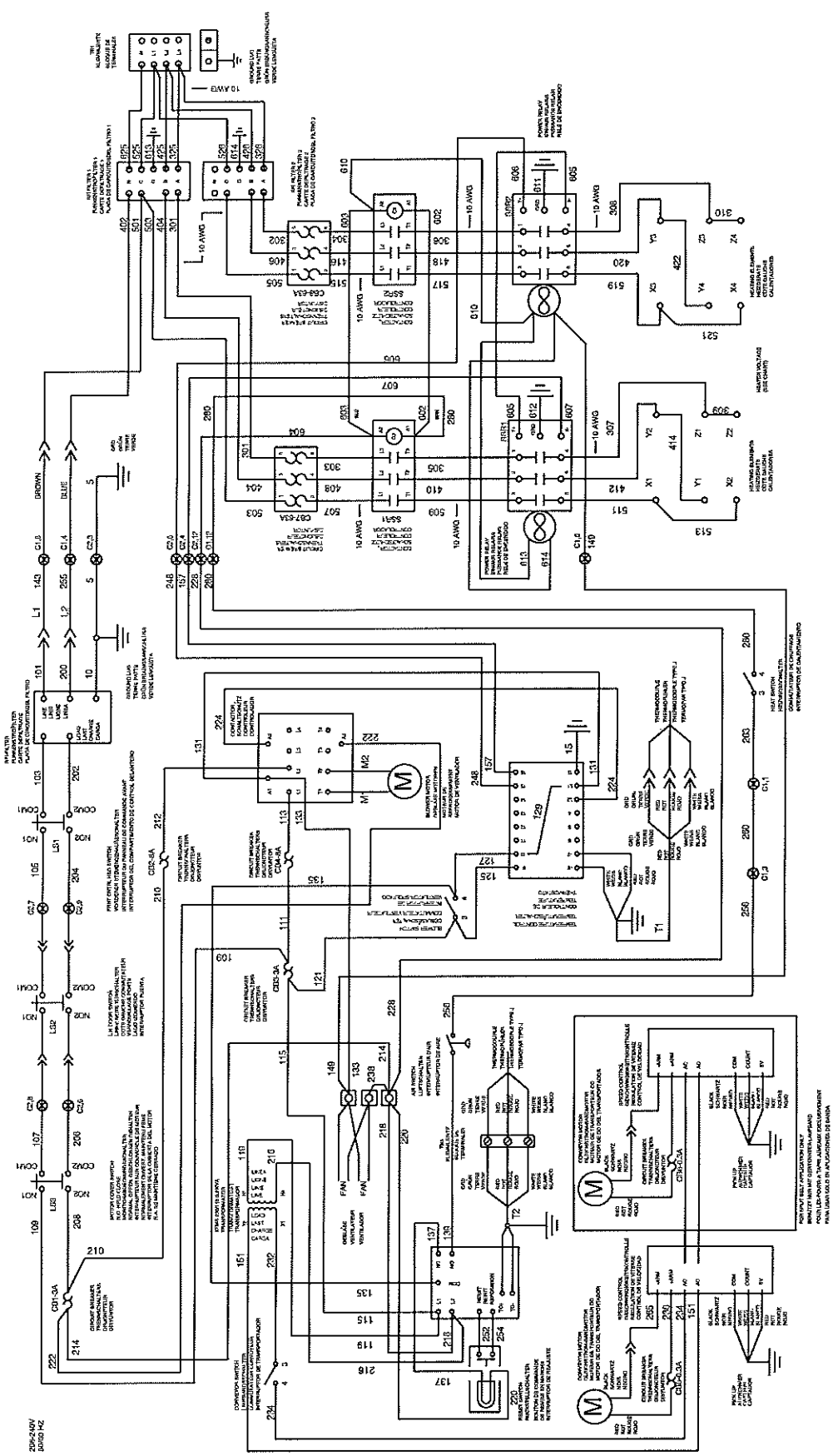

58330D

Wiring Diagram, E380-480 50/60, 5PH 4W BE2136

58267D

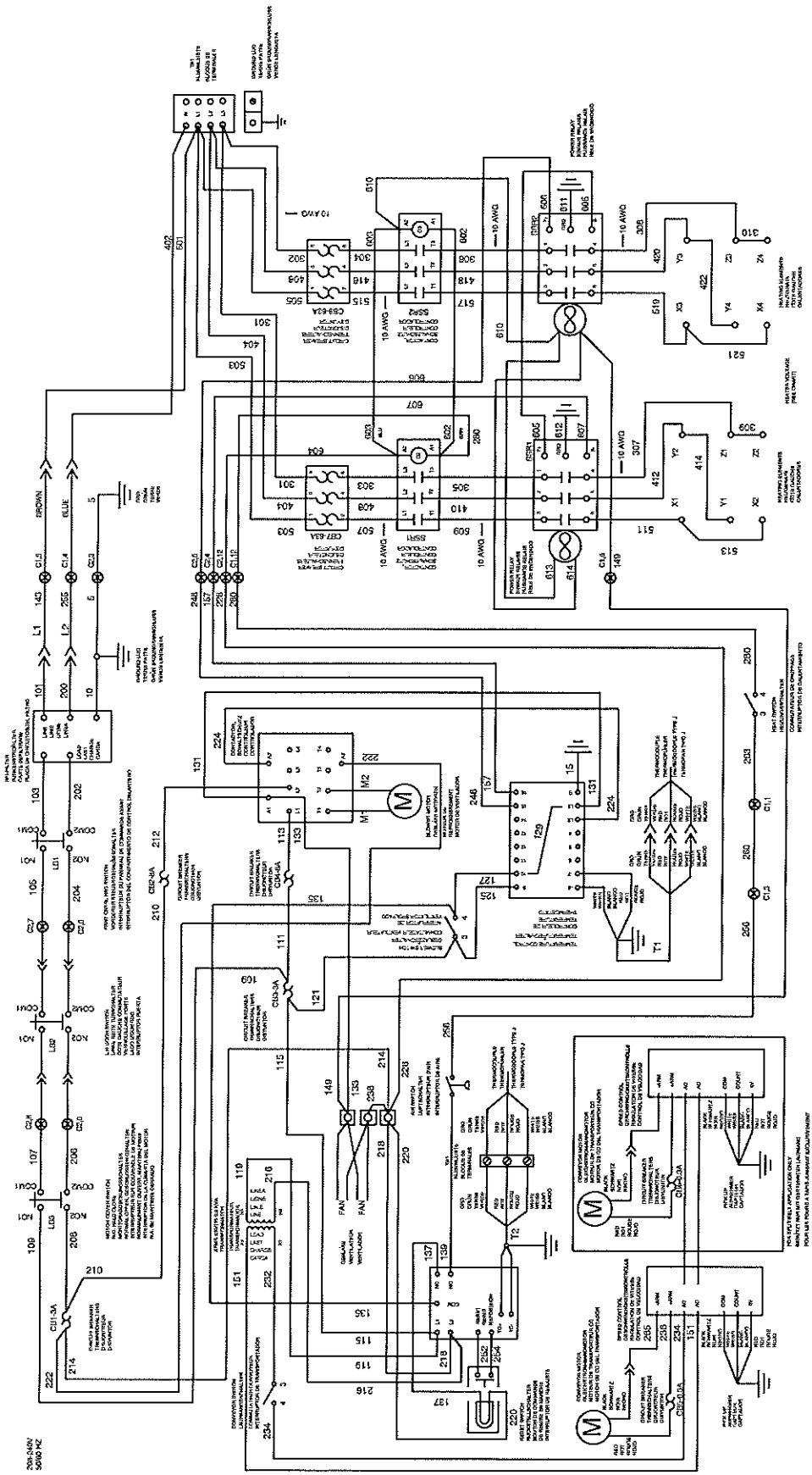

Wiring Diagram, E380 50/60, 5PH 4W BE2136

NOTES

WARNING

Improper installation, adjustment, alteration, service or maintenance can cause property damage, injury or death. Read the installation, operating and maintenance instructions thoroughly before installing or servicing this equipment.

NOTICE

During the warranty period, ALL parts replacement and servicing should be performed by your Middleby Marshall Authorized Service Agent. Service that is performed by parties other than your Middleby Marshall Authorized Service Agent may void your warranty.

NOTICE

Using any parts other than genuine Middleby Marshall factory manufactured parts relieves the manufacturer of all warranty and liability.

NOTICE

Middleby Marshall reserves the right to change specifications at any time.

CFESA

Commercial Food Equipment Service Association

Blodgett is proud to support the Commercial Food Equipment Service Association (CFESA). We recognize and applaud CFESA's ongoing efforts to improve the quality of technical service in the industry.

G.S. Blodgett Corporation • 50 Lakeside Avenue, Box 586 • Burlington, Vermont 05402 • USA
Telephone (800) 331-5842, (802) 860-3700 • Fax: (802) 864-0183

www.blodgettcorp.com

BLODGETT®

THE MIDDLEBY CORPORATION