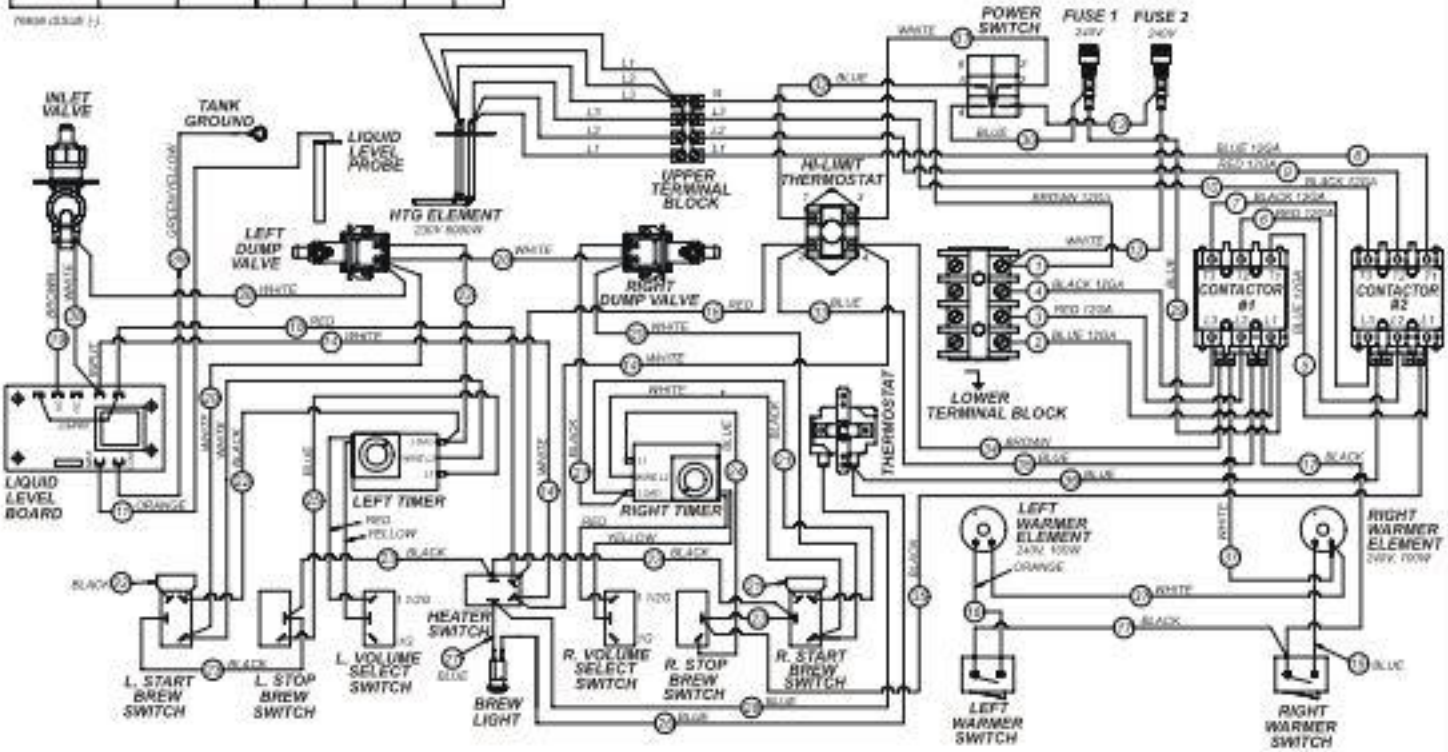MODEL	VOLTS 3NAC	WATTS	AMPS				HZ
			L1	L2	L3	N	
9221EUFC	380-415	6250	8.7	8.7	9.8	1.1	50/60