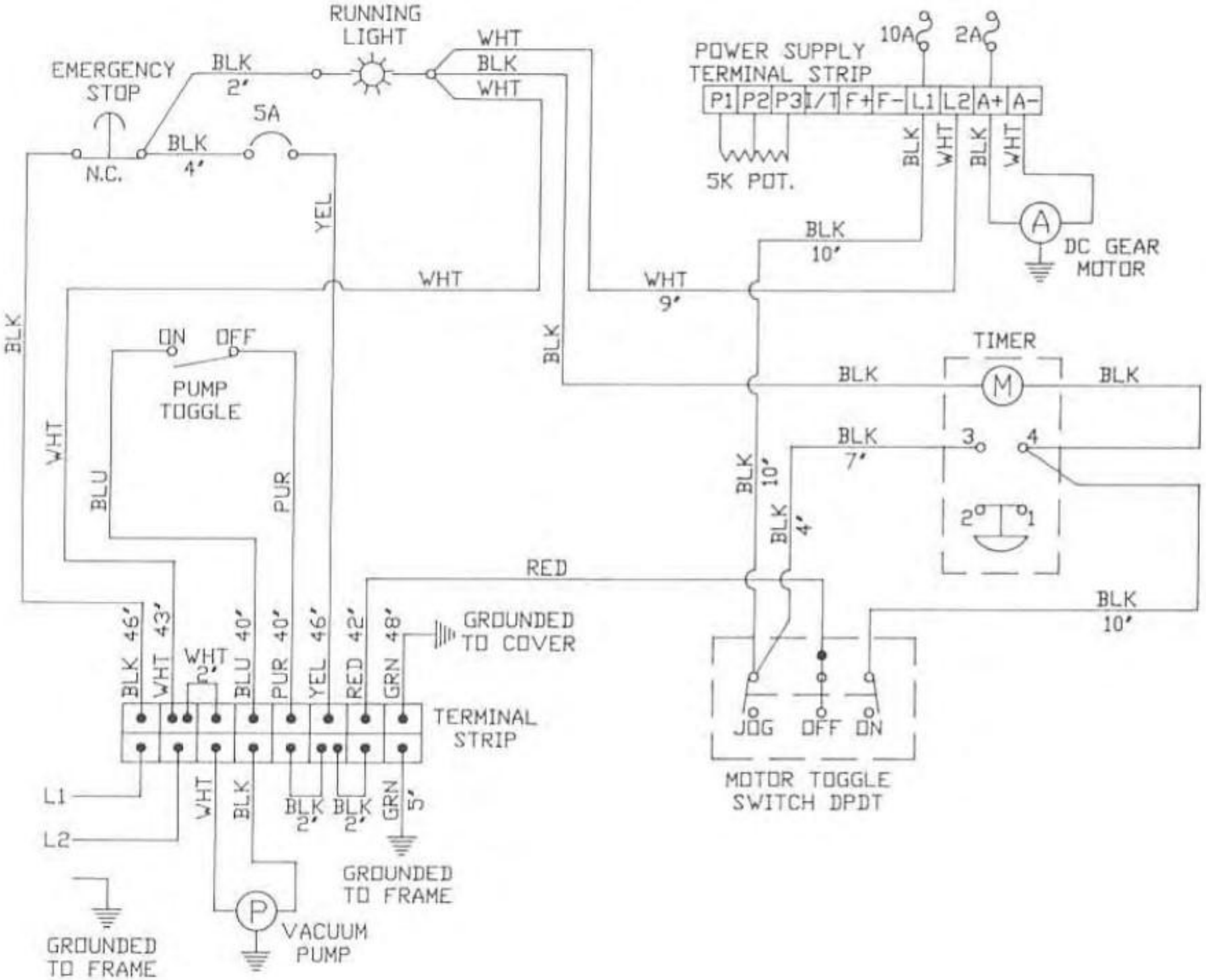
RUNNING LIGHT
EMERGENCY STOP
N.C.
BLK 2'
BLK 4'
5A
WHT
BLK
WHT
YEL
BLK
WHT
ON
OFF
PUMP TOGGLE
BLU
PUR
POWER SUPPLY TERMINAL STRIP
10A
2A
P1 P2 P3 I/T F+ F- L1 L2 A+ A-
5K POT.
BLK
WHT
BLK
WHT
DC GEAR MOTOR
BLK 10'
WHT 9'
BLK
TIMER
BLK
BLK
BLK 7'
BLK 10'
BLK 4'
RED
BLK 10'
BLK 46' WHT 43' WHT 2' BLU 40' PUR 40' YEL 46' RED 42' GRN 48'
GROUNDED TO COVER
TERMINAL STRIP
L1
L2
WHT
BLK
BLK 2' BLK 2' GRN 5'
GROUNDED TO FRAME
GROUNDED TO FRAME
VACUUM PUMP
JOG OFF ON
MOTOR TOGGLE SWITCH DPDT