BRADFORD WHITE®
WATER HEATERS

ELECTRIC REPLACEMENT PARTS LIST

Residential (RE(1,2)U) Utility and Commercial (LE(1,2)U) Utility Models



RE110U* model shown,
models may vary in appearance

Models Covered:
RE(12, 16, 112, 120)U*
LE(16, 120)U*
RE112T
LE112T
RE220U
LE220U
RE(110, 115)U*
LE(110, 115)U*
***Denotes warranty year**

Effective: November, 2023
ECO 8414

NOTE: BOTH MODEL AND SERIAL NUMBERS ARE REQUIRED FOR ORDERING REPLACEMENT PARTS

Dimensions and specifications subject to change without notice.

Save this manual for future reference

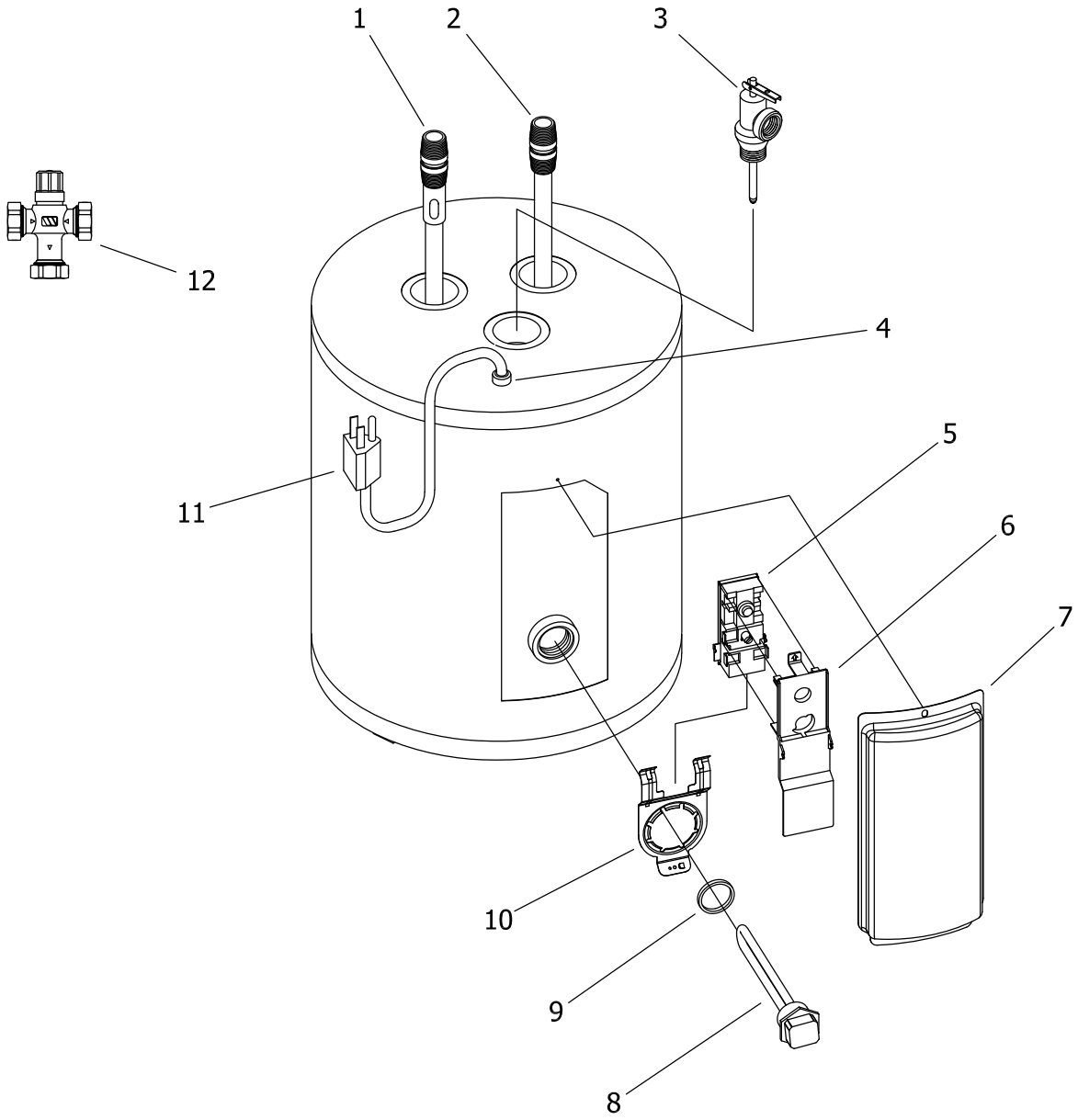

BRADFORD WHITE
WATER HEATERS

Item	Description	Model RE12U*
1	Hot Water Outlet Anode (Magnesium)	415-47776-20
	Hot Water Outlet Anode (Aluminum)	415-32999-32
	Hot Water Outlet Anode (A420 Aluminum)	415-49560-09
2	Cold Water Inlet Dip Tube (PEX)	229-51534-15
3	T&P Relief Valve	415-32920-01
4	Strain Relief Bushing	239-80372-00
5	Thermostat ■	415-50691-00
6	Thermostat Protector	223-50125-00
7	Access Cover	239-44929-00
8	Heating Element (120V/1500W Copper)** ♦	415-42540-02
	Heating Element (120V/1500W Incoloy)** ♦	N/A
9	Element Gasket	223-34019-00
10	Thermostat Mounting Bracket	415-50689-00
11	Power Cord	239-38846-00
12	ASSE Approved Mixing Valve (Optional)	239-51778-00

■ Protector (Item #6) and mounting bracket (Item #10) included in kit with thermostat.
♦ Gasket (Item #9) included with this kit
* Applies to all warranties
** For other wattages/voltages, consult residential Heating Element Replacement Parts List.

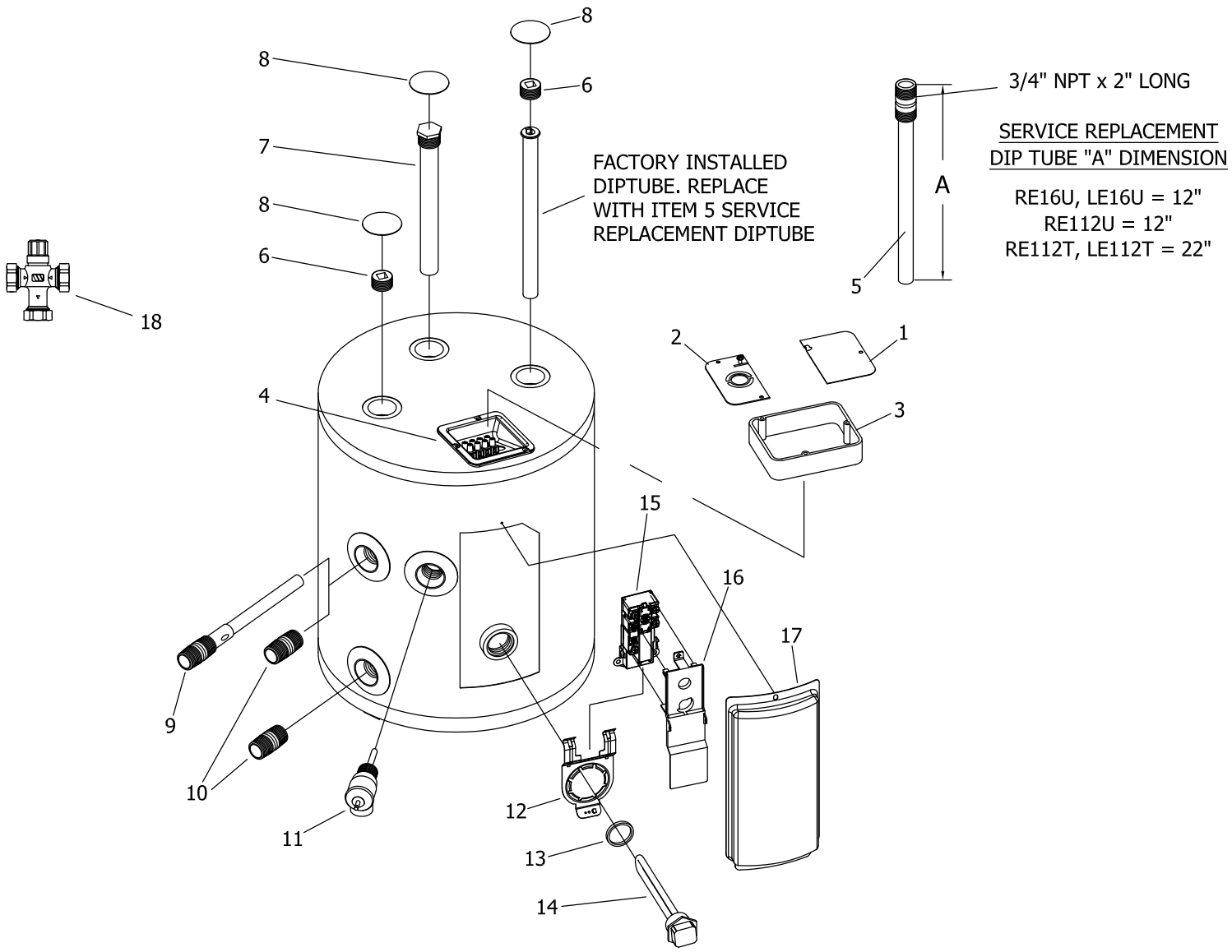
8
8
6
7
FACTORY INSTALLED
DIPTUBE. REPLACE
WITH ITEM 5 SERVICE
REPLACEMENT DIPTUBE
8
6
18
4
3/4" NPT x 2" LONG
SERVICE REPLACEMENT
DIP TUBE "A" DIMENSION
A
RE16U, LE16U = 12"
RE112U = 12"
RE112T, LE112T = 22"
5
2
1
3
15
16
17
9
10
11
12
13
14

Item	Description	Model RE16U*	Model LE16U*	Model RE120U*	Model LE120U*
1	Junction Box Cover	243-39452-00	243-39452-00	243-39452-00	243-39452-00
2	Bracket-Grounding/Conduit w/ Ground Screw	239-55386-00	---	239-55386-00	---
	Bracket-Grounding/Conduit	---	239-39451-00	---	239-39451-00
3	Junction Box Extender	---	239-40587-00	---	239-40587-00
4	J-Box w/ Terminal Block	---	265-47380-00	---	265-47380-00
5	Service Replacement Dip Tube (PEX)	415-51534-13	415-51534-13	---	---
6	Pipe Plug 3/4 NPT	239-11638-00	239-11638-00	---	---
7	Anode Rod Plug Type (Magnesium)#	415-47782-08	415-47782-08	---	---
	Anode Rod Plug Type (Aluminum)#	415-38508-10	415-38508-10	---	---
	Anode Rod Plug Type (A420 Aluminum)#	415-49559-04	415-49559-04	---	---
8	Hole Closure	239-31547-02	239-31547-02	---	---
9	Hot Water Outlet Anode (Magnesium)#	---	---	415-47776-19	415-47776-19
	Hot Water Outlet Anode (Aluminum)#	---	---	415-32999-28	415-32999-28
	Hot Water Outlet Anode (A420 Aluminum)#	---	---	415-49560-10	415-49560-10
10	Inlet/Outlet Nipple	229-32762-03	229-32762-03	229-32762-03	229-32762-03
11	T&P Relief Valve	415-40594-02	415-40594-02	415-40594-02	415-40594-02
12	Thermostat Mounting Bracket	415-50689-00	415-50689-00	415-50689-00	415-50689-00
13	Element Gasket	223-34019-00	223-34019-00	223-34019-00	223-34019-00
14	Heating Element 1500W, 120V Copper** ♦	415-42540-02	415-42540-02	415-42540-02	415-42540-02
	Heating Element 1500W, 120V Incoloy** ♦	415-42541-02	415-42541-02	415-42541-02	415-42541-02
15	Thermostat-Residential ■■	415-50691-00	---	415-50691-00	---
	Thermostat-Light Duty Commercial ■■ ∩	---	415-50691-00	---	415-50691-00
	Thermostat-Light Duty Commercial ■ Φ ∩∩	---	415-53388-00	---	415-53388-00
16	Thermostat Protector	223-50125-00	223-50125-00	223-50125-00	223-50125-00
17	Access Cover	243-36618-02	243-36618-02	243-36618-02	243-36618-02
18	ASSE Approved Mixing Valve (Optional)	239-51778-00	239-51778-00	239-51778-00	239-51778-00

■ Protector (Item #16) included in kit with thermostat.
■■ Protector (Item #16) and mounting bracket (Item #12) included in kit with thermostat.
Φ Mounting bracket (Item #12) not included in kit with thermostat.
♦ Gasket (Item #13) included with this kit
** For other wattages/voltages, consult residential Heating Element Replacement Parts List.
# Anode may need to be cut to length
∩ Design certified for products with serial numbers PRIOR to TD43243484.
∩∩ Design certified for products with serial numbers AFTER and including TD43243484.

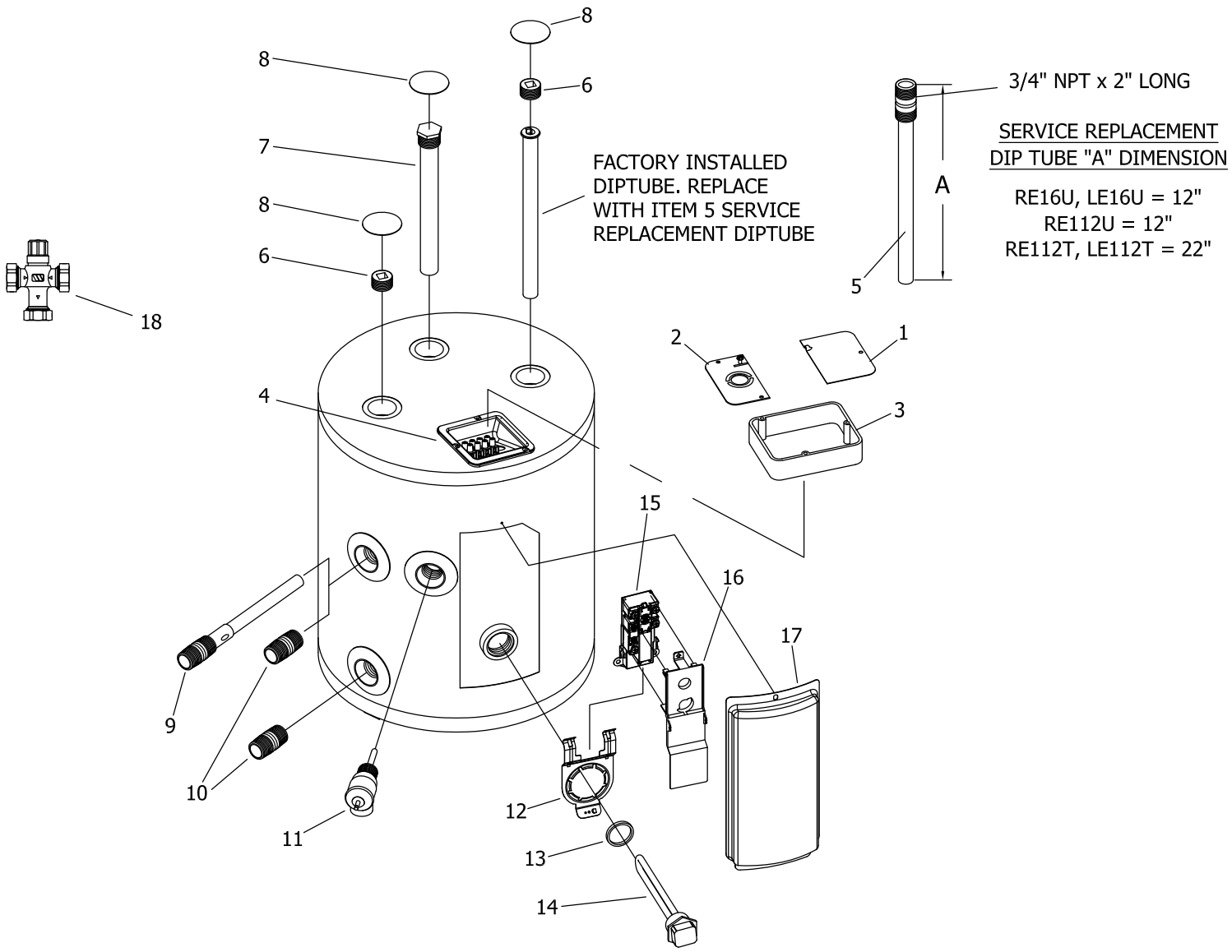
8
8
6
7
8
6
18
FACTORY INSTALLED
DIPTUBE. REPLACE
WITH ITEM 5 SERVICE
REPLACEMENT DIPTUBE
3/4" NPT x 2" LONG
SERVICE REPLACEMENT
DIP TUBE "A" DIMENSION
A
RE16U, LE16U = 12"
RE112U = 12"
RE112T, LE112T = 22"
5
2
1
3
4
15
16
17
9
10
11
12
13
14

Item	Description	Model RE112U*	Model RE112T	Model LE112T	Model RE220U	Model LE220U
1	Junction Box Cover	243-39452-00	243-39452-00	243-39452-00	243-39452-00	243-39452-00
2	Bracket-Grounding/Conduit w/ Ground Screw	239-55386-00	239-55386-00	---	239-55386-00	---
	Bracket-Grounding/Conduit	---	---	239-39451-00	---	239-39451-00
3	Junction Box Extender	---	---	239-40587-00	---	239-40587-00
4	J-Box w/ Terminal Block	---	---	265-47380-00	---	265-47380-00
5	Service Replacement Dip Tube (PEX)	415-51534-02	415-51534-02	415-51534-02	---	---
6	Pipe Plug 3/4 NPT	239-11638-00	239-11638-00	239-11638-00	---	---
7	Anode Rod Plug Type (Magnesium)#	415-47782-08	415-47782-08	415-47782-08	---	---
	Anode Rod Plug Type (Aluminum)#	415-38508-10	415-38508-10	415-38508-10	---	---
	Anode Rod Plug Type (A420 Aluminum)#	415-49559-04	415-49559-04	415-49559-04	---	---
8	Hole Closure	239-31547-02	239-31547-02	239-31547-02	---	---
9	Hot Water Outlet Anode (Magnesium)#	---	---	---	415-47776-19	415-47776-19
	Hot Water Outlet Anode (Aluminum)#	---	---	---	415-32999-28	415-32999-28
	Hot Water Outlet Anode (A420 Aluminum)#	---	---	---	415-49560-10	415-49560-10
10	Inlet/Outlet Nipple	229-32762-03	229-32762-03	229-32762-03	229-32762-03	229-32762-03
11	T&P Relief Valve	415-40594-02	415-40594-02	415-40594-02	415-40594-02	415-40594-02
12	Thermostat Mounting Bracket	415-50689-00	415-50689-00	415-50689-00	415-50689-00	415-50689-00
13	Element Gasket	223-34019-00	223-34019-00	223-34019-00	223-34019-00	223-34019-00
14	Heating Element 1500W, 120V Copper** ♦	415-42540-02	415-42540-02	415-42540-02	415-42540-02	415-42540-02
	Heating Element 1500W, 120V Incoloy** ♦	415-42541-02	415-42541-02	415-42541-02	415-42541-02	415-42541-02
15	Thermostat-Residential ■■	415-50691-00	415-50691-00	---	415-50691-00	---
	Thermostat-Light Duty Commercial ■■ ∩	---	---	415-50691-00	---	415-50691-00
	Thermostat-Light Duty Commercial ■ Φ ∩∩	---	---	415-53388-00	---	415-53388-00
16	Thermostat Protector	223-50125-00	223-50125-00	223-50125-00	223-50125-00	223-50125-00
17	Access Cover	243-36618-02	243-36618-02	243-36618-02	243-36618-02	243-36618-02
18	ASSE Approved Mixing Valve (Optional)	239-51778-00	239-51778-00	239-51778-00	239-51778-00	239-51778-00

■ Protector (Item #16) included in kit with thermostat.
■■ Protector (Item #16) and mounting bracket (Item #12) included in kit with thermostat.
Φ Mounting bracket (Item #12) not included in kit with thermostat.
♦ Gasket (Item #13) included with this kit
** For other wattages/voltages, consult residential Heating Element Replacement Parts List.
# Anode may need to be cut to length
∩ Design certified for products with serial numbers PRIOR to TD43243484.
∩∩ Design certified for products with serial numbers AFTER and including TD43243484.

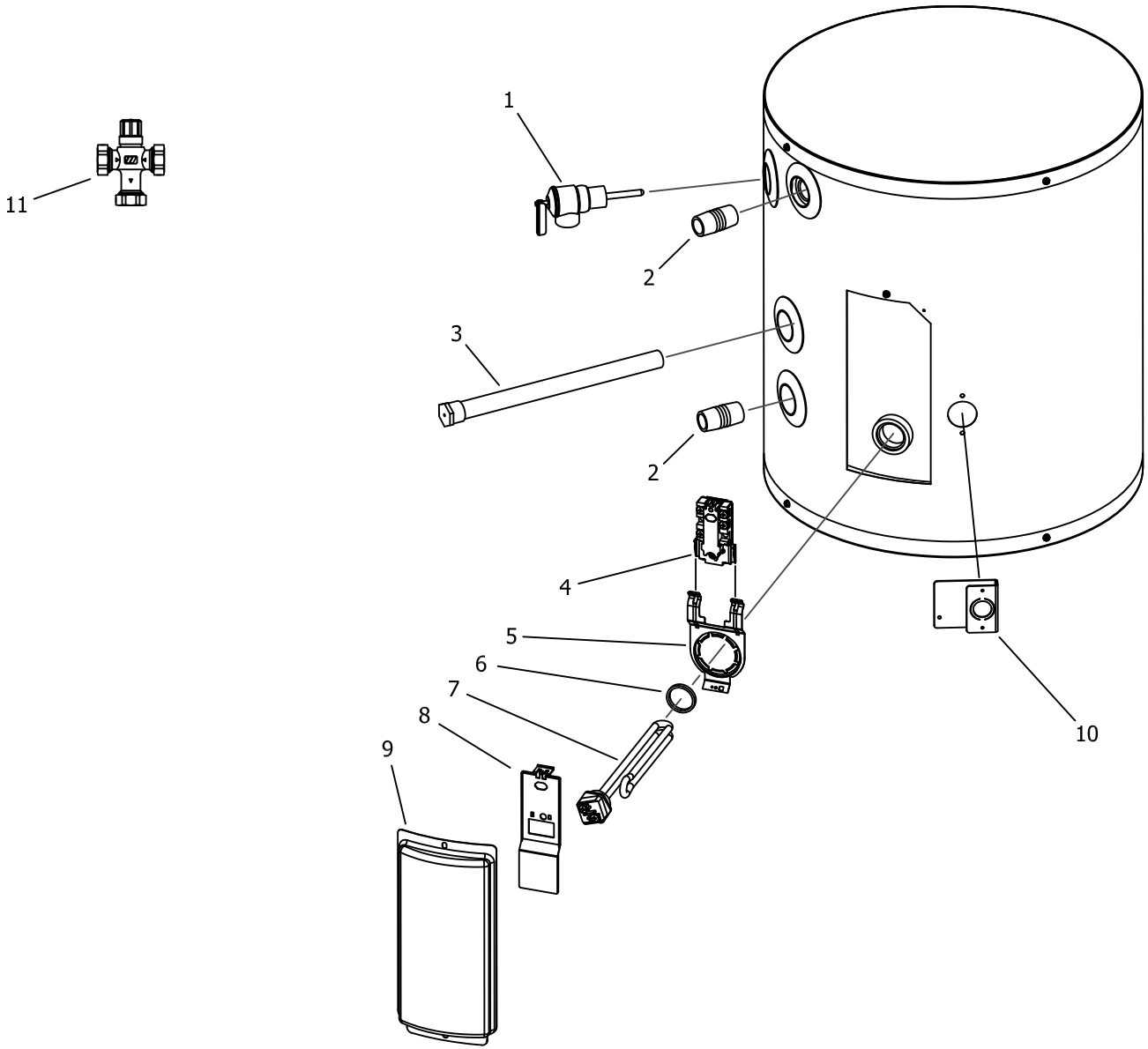

BRADFORD WHITE
WATER HEATERS

Item	Description	Model RE110U*	Model LE110U*	Model RE115U*	Model LE115U*
1	T&P Relief Valve	415-40594-02	415-40594-02	415-40594-02	415-40594-02
2	Inlet/Outlet Nipple	229-32762-03	229-32762-03	229-32762-03	229-32762-03
3	Anode Rod Plug Type (Magnesium)#	415-47782-08	415-47782-08	415-47782-08	415-47782-08
	Anode Rod Plug Type (Aluminum)#	415-38508-10	415-38508-10	415-38508-10	415-38508-10
	Anode Rod Plug Type (A420 Aluminum)#	415-49559-04	415-49559-04	N/A	N/A
4	Thermostat-Residential ■■	415-50691-00	---	415-50691-00	---
	Thermostat-Light Duty Commercial ■■ ∩	---	415-50691-00	---	415-50691-00
	Thermostat-Light Duty Commercial ■ Φ ∩∩	---	415-53388-00	---	415-53388-00
5	Thermostat Mounting Bracket	415-50689-00	415-50689-00	415-50689-00	415-50689-00
6	Element Gasket	223-34019-00	223-34019-00	223-34019-00	223-34019-00
7	Heating Element 1500W, 120V Copper** ♦	415-42540-02	415-42540-02	415-42540-02	415-42540-02
	Heating Element 1500W, 120V Incoloy** ♦	415-42541-02	415-42541-02	415-42541-02	415-42541-02
8	Thermostat Protector	223-50125-00	223-50125-00	223-50125-00	223-50125-00
9	Access Cover	243-36618-02	243-36618-02	243-36618-02	243-36618-02
10	Bracket-Grounding/Conduit	239-46167-00	239-46167-00	239-46167-00	239-46167-00
11	ASSE Approved Mixing Valve (Optional)	239-51778-00	239-51778-00	239-51778-00	239-51778-00

■ Protector (Item #16) included in kit with thermostat.
■■ Protector (Item #16) and mounting bracket (Item #12) included in kit with thermostat.
Φ Mounting bracket (Item #12) not included in kit with thermostat.
♦ Gasket (Item #6) included with this kit.
Anode may need to be cut to length.
∩ Design certified for products with serial numbers PRIOR to TD43243484.
∩∩ Design certified for products with serial numbers AFTER and including TD43243484.

Reference Chart of Anode Length by Model

Model	AOD Anode Cut Length (End to end)		Hex Head Anode Cut Length (End to end)	
	Inches	Millimeters	Inches	Millimeters
RE12U*	9.63	245	---	---
RE16U*	---	---	9.5	241
RE120U*	13.63	346	---	---
LE120U*	13.63	346	---	---
RE112U*	---	---	9.5	241
RE112T	---	---	17.5	445
LE112T	---	---	17.5	445
RE220U	13.63	346	---	---
LE220U	13.63	346	---	---
RE110U*	---	---	9.5	241
LE110U*	---	---	9.5	241
RE115U*	---	---	9.5	241
LE115U*	---	---	9.5	241

BRADFORD WHITE®
WATER HEATERS

United States

Sales	**1-800-523-2931**
Technical Support	**1-800-334-3393**
Email	***techsupport@bradfordwhite.com***
Warranty	**1-800-531-2111**
Email	***warranty@bradfordwhite.com***
Service Parts	**1-800-538-2020**
Email	***parts@bradfordwhite.com***

Canada

Sales	**1-866-690-0961 1-905-203-0600**
Fax	**905-636-0666**
Warranty	**1-800-531-2111**
Email	***warranty@bradfordwhite.com***
Technical Support	**1-800-334-3393**
Email	***techsupport@bradfordwhite.com***
Orders	***ca.orders@bradfordwhite.com***
Service Parts	***bwccwarranty@bradfordwhite.com***

For U.S. and Canada field service, contact your professional installer or local Bradford White sales representative.

International

General Contact	***international@bradfordwhite.com***

©2023, Bradford White Corporation, USA. All rights reserved.

www.bradfordwhite.com