AX-M40

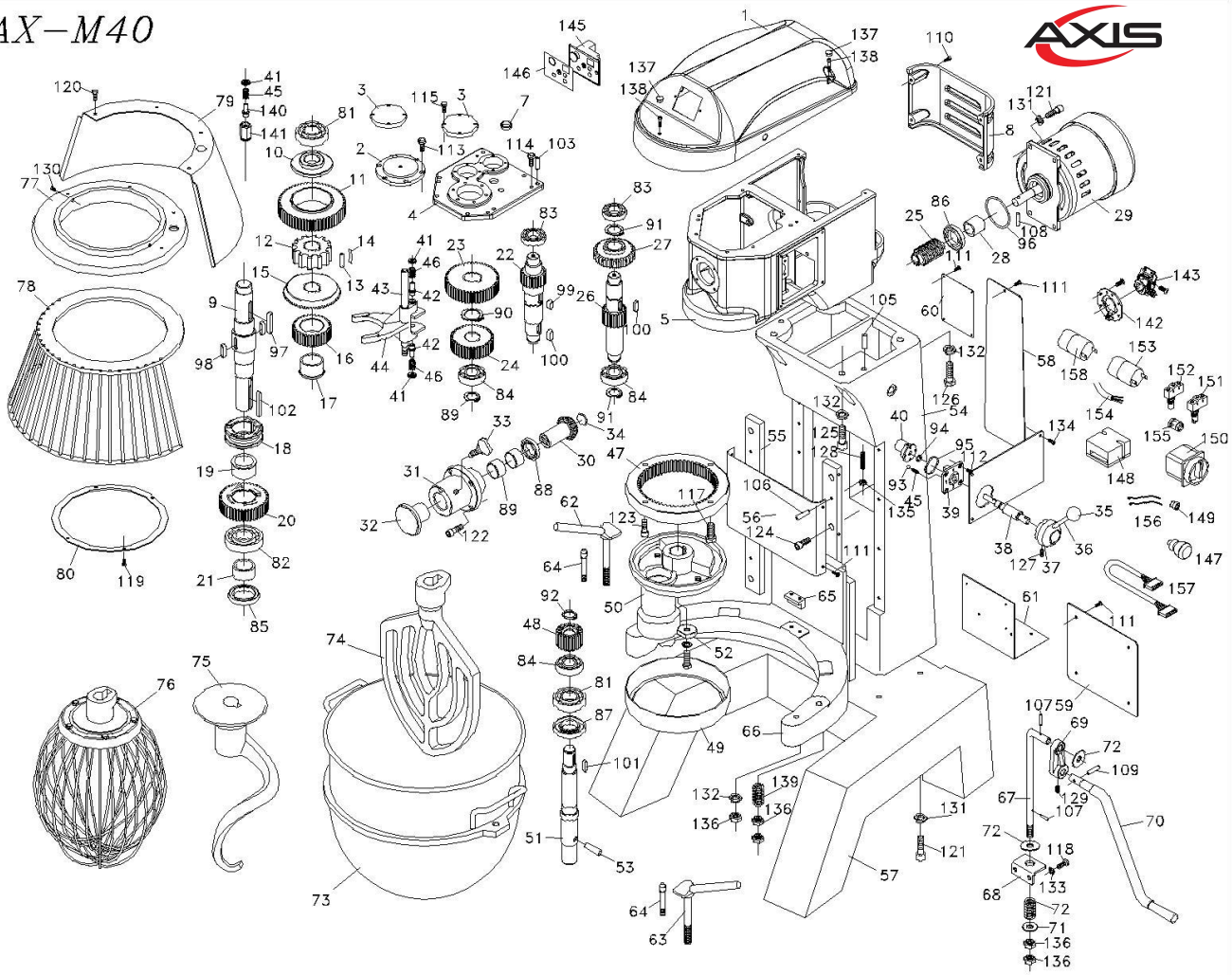
AXIS
1
2
3
4
5
7
8
9
10
11
12
13
14
15
16
17
18
19
20
21
22
23
24
25
26
27
28
29
31
32
33
34
35
36
37
38
39
40
41
42
43
44
45
46
47
48
49
50
51
52
53
54
55
56
57
58
59
60
61
62
63
64
65
66
67
68
69
70
71
72
73
74
75
76
77
78
79
80
81
82
83
84
85
86
87
88
89
90
91
92
93
94
95
96
97
98
99
100
101
102
103
105
106
107
108
109
110
111
113
114
115
117
118
119
120
121
122
123
124
125
126
127
129
130
131
132
133
134
135
136
137
138
139
140
141
142
143
145
146
147
148
149
150
151
152
153
154
155
156
157
158

72-AX40			
ACCPAC	N0.	NAME	QTY.
73-0250	1	#AXM40-01-001 TOP COVER	1PC
73-0118	2	#11032-01-002 RETAINER-MAIN SHAFT (AX-M40)	1PC
73-0119	3	#11032-01-003 RETAINER-TRANSMISSION SHAFT (AX-M40)	2PC
73-0251	4	#AXM40-01-004 GEAR HOUSE COVER (AX-M40)	1PC
73-0252	5	#AXM40-01-005 CASE-TRANSMISSION (AX-M40)	1PC
73-0376	6	#GM40-01-007 CONTROL PANEL (AX-M40)	1PC
73-73-3	7	#11012-04-008 OIL BAFFLE	1PC
73-0253	8	#AXM40-01-006 EAR COVER OF MIXER HEAD (AX-M40)	1PC
73-0120	9	#11032-02-001 MAIN SHAFT (AX-M40)	1
73-0121	10	#11032-02-006 DETAIN-FIXED COVER (AX-M40)	1
73-0127	11	#11032-02-014 58T GEAR (AX-M40)	1
73-0129	12	#11032-02-018 SLEEVE DRIVE (AX-M40)	1
73-0070	13	#11031-02-013 (30-19) PIN	12
73-0069	14	#11031-02-012 (30-20) SPRING SHEET	12
73-0122	15	#11032-02-007 BEVEL GEAR (AX-M40)	1
73-0123	16	#11032-02-009 33T GEAR (AX-M40)	1
73-4017	17	#11032-02-010 COPPER BUSHING	1
73-0124	18	#11032-02-011 CLUTCH (AX-M40)	1
73-0126	19	#11032-02-013 COPPER BUSHING (AX-M40)	1
73-0125	20	#11032-02-012 45T GEAR (AX-M40)	1
73-0128	21	#11032-02-016 SPACER (AX-M40)	1
73-0130	22	#11032-03-001 GEAR SHAFT (AX-M40)	1
73-0131	23	#11032-03-002 47T GEAR (AX-M40)	1
73-8413	24	#11032-03-004 35T GEAR	1
73-0133	26	#11032-04-006 SHAFT-WORM GEAR (AX-M40)	1
73-0134	27	#11032-04-007 WORM GEAR (AX-M40)	1
73-8539	28	#11012-02-010 SPACER	1
73-8462	29	#AXM40-05-001/220/60/1 MOTOR-220V/60/1-1.5HP	1
73-0135	30	#11032-06-001 30T BEVEL GEAR (AX-M40)	1
73-0136	31	#11032-06-003 HUB ATTACHMENT (AX-M40)	1
73-0162	32	#11091-06-004 PLUG	1
73-0362	33	#GM20-06-005 THUMB SCREW (AX-M20, M30, M40)	1
73-0029	34	#11012-06-006 OIL BAFFLE (AX-M20, M30, M40)	1
73-0079	35	#11031-07-001 KNOB-SHIFT HANDLE (AX-M30, M40)	1
73-0080	36	#11031-07-002 SHIFT HANDLE (AX-M30, M40)	1
73-0081	37	#11031-07-003 BASE ASSY-HANDLE (AX-M30, M40)	1
73-8491	38	#GM40-07-004 SHAFT- SHIFT ECCENTRIC	1
73-0032	39	#11012-07-005 SHIFT SELECTOR (AX-M20, M40)	1
73-0033	40	#11012-07-006 ECCENTRIC SHAFT (AX-M20, M40)	1
73-0083	41	#11031-07-007 LOCK SCREW (AX-M30, 40)	2
73-0084	42	#11031-07-008 PLUNGER SHAFT-SHIFTER (AX-M20)	2
73-0137	43	#11032-07-009 FIXING SHAFT-SHIFTER (AX-M40)	1
73-0117	44	#11032-07-010 SHIFT FORK	1
73-0086	45	#11031-07-011 COMPRESSION SPRING (AX-M20, M30, M4	2
73-0087	46	#11031-07-012 COMPRESSION SPRING (AX-M20, M30, M40	2
73-0138	47	#11032-08-001 INTERNAL GEAR (AX-M40)	1
73-0139	48	#11032-08-002 18T GEAR (AX-M40)	1
73-0090	49	#11031-08-003 HEAD RING (AX-M30, M40)	1
73-0140	50	#11032-08-004 PLANETARY HEAD (AX-M40)	1
73-0141	51	#11032-08-005 AGITATING SHAFT (AX-M40)	1
73-0093	52	#11031-08-006 SPACER (AX-M30, M40)	1
73-0142	53	#11032-08-012 TAPERED PIN (AX-M40)	1
73-0143	54	#11032-09-001 COLUMN (AX-M40)	1
73-0144	55	#11032-09-002 SLIDEWAY (AX-M40)	2
73-0145	56	#11032-09-003 APRON (AX-M40)	1
73-0147	57	#11040-09-004 BASE (AX-M40)	1
73-0098	58	#11031-09-006 COLUMN COVER (AX-M30, M40)	1
73-0099	59	#11031-09-007 PLATE (AX-M30, M40)	1
73-0100	60	#11031-09-008 PANEL OF SPECIFICATIONS (AX-M30, M40)	1
73-0101	61	#11031-09-009 SEAT OF CONTACTOR (AX-M30, M40)	1
73-0373-	62	#GM30-10-001A BOWL CLAMP (LEFT) (AX-M30, M40)	1
73-0374	63	#GM30-10-001B BOWL CLAMP (RIGHT) (AX-M30, M40)	1
73-0149	64	#11040-10-005 BOWL LOCATING PIN (AX-M40)	2
73-0103	65	#11031-10-003 RETAINER-BOWL (AX-M30, M40)	1
73-0148	66	#11040-10-004 BOWL SUPPORT (AX-M40)	1
73-0106	67	#11031-11-001 LIFTING BAR (AX-M30, M40)	1
73-0107	68	#11031-11-002 LIFTING HANDLE BRACKET (AX-M30, M40)	1
73-0108	69	#11031-11-003 INNER ARM (AX-M30, M40)	1
73-0377	70	#GM40-11-004 LIFT HANDLE (AX-M40)	1
73-0109	71	#11031-11-005 COMPRESSION SPRING (AX-M30, M40)	1
73-0110	72	#11031-11-006 SPACER (AX-M30)	4
73-0150	73	#11040-12-001 BOWL (AX-M40)	1
73-0151	74	#11040-12-002 BEATER (AX-M40)	1
73-0152	75	#11040-12-003 SPIRAL HOOK (AX-M40)	1
73-0153	76	#11040-12-004 WIRE WHIP	1
73-8468	77	#BM30-13-001A SEAT OF GUARD	1
73-0378	78	#GM40-13-002A SLIDING OPENER (AX-M40)	1
73-0379	79	#GM40-13-004 REAR COVER OF SAFETY GUARD (AX-M40)	1
73-0115	80	#11031-13-003A FIXED RING (AX-M40)	1

73-0310	81	#BR-6206Z BALL BEARING (AX-M40)	2
73-0312	82	#BR-6207ZZ BALL BEARING	1
73-0299	83	#BR-6005Z BALL BEARING (AX-M20)	2
73-0309	84	#BR-6205Z BALL BEARING FOR (AX-M30, M40, M60)	3
73-0444	85	#OS-TC44X60X09 OIL SEAL (AX-M40)	1
73-0438	86	#OS-TC30X45X08 OIL SEAL (AX-M40)	1
73-0440	87	#OS-TC35X62X10 OIL SEAL (AX-M40)	1
73-0438	88	#OS-TC30X45X08 OIL SEAL (AX-M40)	1
73-0293	89	#BR-3020 BEARING (AX-M40)	2
73-749	90	#CR-S32 C SNAP RING (AX-M40)	1
73-0327	91	#CR-S25 C SNAP RING (AX-M40)	2
73-0326	92	#CR-S24 C SNAP RING (AX-M40)	1
73-0476	93	#SB-6 STEEL BALL	2
73-0429	94	#OR-P9 O-RING (AX-M30, M40)	1
73-0424	95	#OR-33.5X37.5X2 O RING (AX-M20, M30, M40)	1
73-0426	96	#OR-G60 O RING (AX-M20, M30, M40)	1
73-0405	97	#KRR-8X8X50 KEY (AX-M40)	1
73-0404	98	#KRR-8X8X30 KEY (AX-M40)	2
73-0402	99	#KRR-8X8X20 KEY (AX-M40)	1
73-0403	100	#KRR-8X8X25 KEY (AX-M40)	2
73-0399	101	#KRR-6X6X25 KEY (AX-M40, M60)	1
73-0382	102	#KR-1/4X1/4X65 KEY (AX-M40)	1
73-0509	103	#SPP-8X25 SPRING PIN	2
73-8506	104	#SPP-4X24 SPP-4X24	1
73-0496	105	#SPP-10X24 SPRING PIN	2
73-0508	106	#SPP-8X24 SPRING PIN	2
73-0501	107	#SPP-4X25 SPRING PIN	2
73-8547	108	#TP-6X30 TAPERED PIN #6X30L	1
73-0527	109	#TP-4X32 TAPERED PIN	1
73-0454	110	#S+R3/16X3/8 MAC. SCREW (AX-M20)	8
73-0453	111	#S+R3/16X1/4 MAC. SCREW (AX-M40)	16
73-769	112	#S+F3/16X1/2 MAC. SCREW (AX-M12)	4
73-0474	113	#S-5/16X5/8 BOLT W5/16"X5/8"L	6
73-0470	114	#S-5/16X1 BOLT W5/16"X1"L	8
73-0464	115	#S-1/4X5/8 BOLT W1/4"X5/8"L	8
73-0467	116	#S-3/8X1 BOLT	1
73-0458	117	#S-1/2X3/4 BOLT (AX-M40)	2
73-0473	118	#S-5/16X3/8 BOLT W5/16"X3/8"L	2
73-0466	119	#S-3/16X3/8 BOLT W3/16"X3/8"L	6
73-0463	120	#S-1/4X3/8 BOLT (AX-M60)	4
73-0488	121	#S-C-3/8X1-1/4 CAP SCREW	7
73-0480	122	#S-C-1/4X1 CAP SCREW	6
73-0488	123	#S-C-3/8X1-1/4 CAP SCREW	4
73-0492	124	#S-C-5/16X3/4 CAP SCREW	8
73-0478	125	#S-C-1/2X2 CAP SCREW W1/2"XL2"	4
73-0478	126	#S-C-1/2X2 CAP SCREW W1/2"XL2"	2
73-0516	127	#S-S5/16X5/8 SET SCREW	1
73-0512	128	#S-S5/16X2 SET SCREW	1
73-0514	129	#S-S5/16X3/8 SET SCREW	1
73-0514	130	#S-S5/16X3/8 SET SCREW	2
73-0524	131	#SW-3/8 SPRING WASHER	8
73-0521	132	#SW-1/2 SPRING WASHER	6
73-778	133	#SW-5/16 SPRING WASHER	2
73-773	134	#NUT-3/8X16NC (AX-M20, M30)	1
73-8531	135	#NUT-5/16X18NC NUT	1
73-0415	136	#NUT-1/2X12NC (AX-M30, M60)	10
73-8462	137	#AXM40-05-001/220/60/1 MOTOR-220V/60/1-1.5HP	3
73-3134	138	#S-C-1/4X2-1/2 CAP SCREW	3
73-0105	139	#11031-10-005 COMPRESSION SPRING	2
73-0146	140	#11032-13-007 PLUNGER (AX-M40)	1
73-0154	141	#11040-13-006 SEAT OF LIMIT SWITCH (AX-M40)	1
73-4142	142	#11032-05-006/60HZ GOVERNOR PLATE	1
73-4143	143	#AXM40-05-001GOVERNOR GOVERNOR	1
73-0546	145	#XLGM07-ROHS CONTROL PANEL	1
73-8474	146	#D11001R STICKER OF PANEL	1
73-2146	147	#ABESMT44+ABMS800M+ABAU8F01 STOP SWITCH	1 PC
73-2146		#ABESMT44+ABMS800M+ABAU8F01 STOP SWITCH	1 PC
73-2180		#ABAU8F01 SWITCH TERMINAL FOR AX M80	1 PC
73-0545	148	#XL711-ROHS RELAY-CONTROL BOX 220V	1
73-6135	150	#CQ1603KL6 MAIN POWER SWITCH	1 PC
73-0548	151	#Z15GQ22B LIMIT SWITCH FOR BOWL GUARD M20,M30	1 pc
73-0548	152	#Z15GQ22B LIMIT SWITCH FOR BOWL GUARD M20,M30	1 pc
73-4148	153	#AXM40-05-001CO(500MFD/250V) START CAPACITOR 500MFD/250VAC	1 PC
73-0315	154	#CABLE-14-3C-UL POWER CABLE (AX-M20, M30, M40)	1 pc
73-0318	155	#CG-20 CABLE TIE (AX-M20, M30, M40)	1 pc
73-0544	156	#XL710-L4 WIRES OF SAFETY GUARD SWITCH	2 pc
73-0542	157	#XL710-L2 INTERNAL WIRE-PANEL/BOX	1 pc
73-4RUN	158	#AXM40-05-001COUN RUN CAPACITOR	1 PC