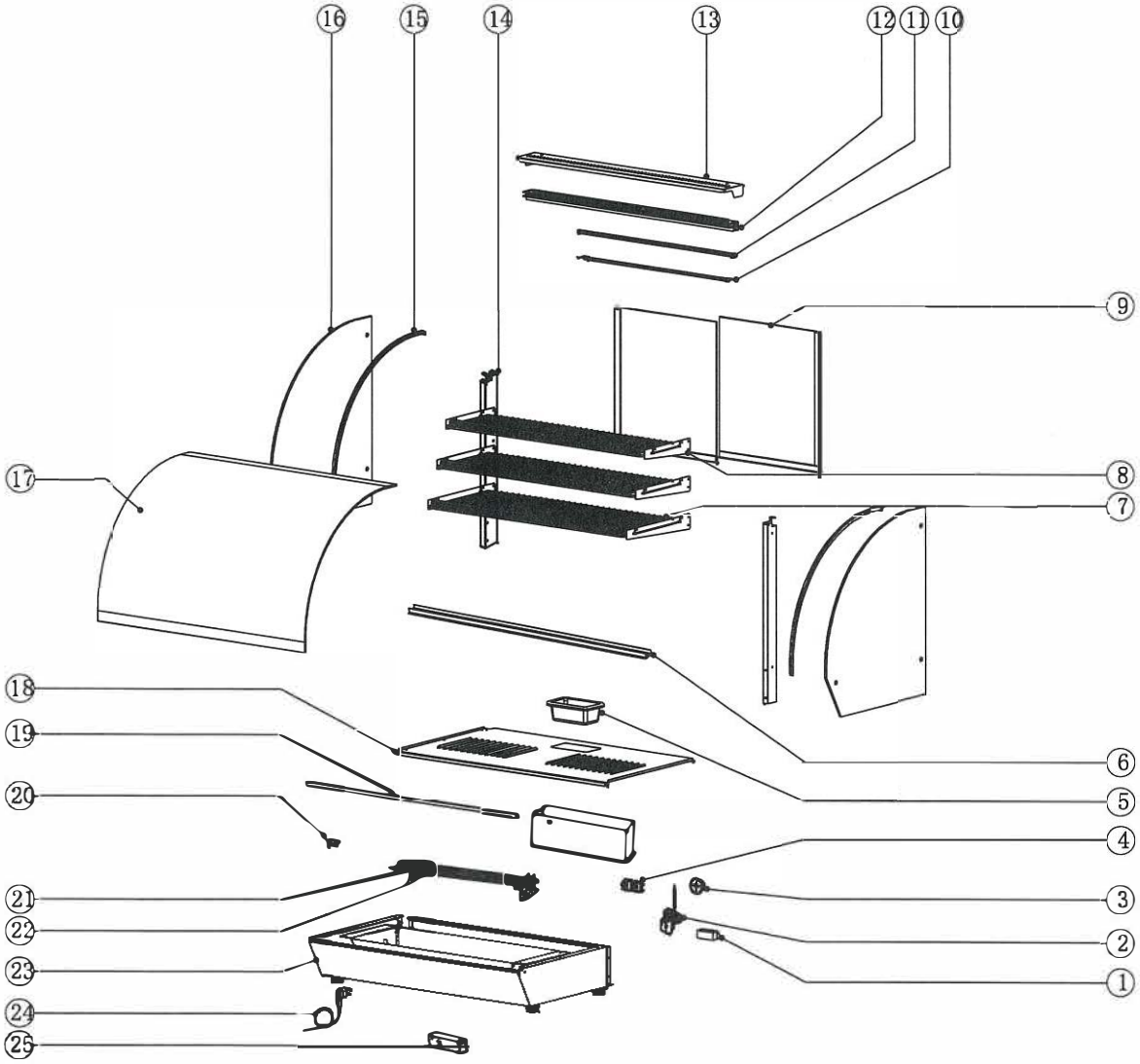

	Square Countertop Display Case CHDC-44	Explosive View 2021.4.21	Page 1 / 2

Item NO.	Part NO.	Discription	Material/Specification	Quantity
1	W0399203	digital thermometer		1
2	W030218953	Temperature Control		1
3		Temperature control knob		
3-1	W0409360	Temperature control knob	ABS	1
3-2	W040936101	Temperature control knob base	ABS	1
4		Switch		
4-1	W0308019	Switch	RL2[P](green)	1
4-2	W0308022	Switch	RL2[P](red)	1
5	C2192-YD01	Water Container	Stainless steel	1
6	W0604511	Door Rail	Aluminium alloy	1
7		Shelf	Stainless steel	
7-1	W0402648	Shelf	Stainless steel/650×338	1
7-2	W0402649	Shelf	Stainless steel/650×288	1
7-3	W0402650	Shelf	Stainless steel/650×238	1
8		Bracket for Shelf	Stainless steel	
8-1	074012303	Bracket for Shelf	Stainless steel	2
8-2	074012304	Bracket for Shelf	Stainless steel	2
8-3	074032305	Bracket for Shelf	Stainless steel	2
9	W041275003	Sliding door	Tempered glass	2
10	W030418601	LED Lamp		1
11	W0415060	Top Sealing Strip	Silicon rubber	2
12	W0604510	Top connector	Aluminium alloy	1
13	007408015	Cover plate	Stainless steel	1
14	007408026	Column	Stainless steel	2
15	W0415060	Sealing strip on the side	Silicon rubber	2
16	W041275001	Side glass	Tempered glass	2
17	W041275002	Front glass	Tempered glass	1
18	007408011	Ventilation panel	Stainless steel	1
19	W0415061	Sealing strip	Silicon rubber	1
20	W030218957	Temperature limiter		1
21	W0311152	Heating tube	Stainless steel	1
22	007408038	Coil support	Stainless steel	2
23	007408003	Bottom mounting plate	Stainless steel	1
24	W0305143	Power Cord(with plug)	3×UL/AWG14	1
25	W0304188	Switching Power Supply	APV-12-12	1

Square Countertop Display Case CHDC-44	Explosive View 2021.4.21	Page 2/ 2