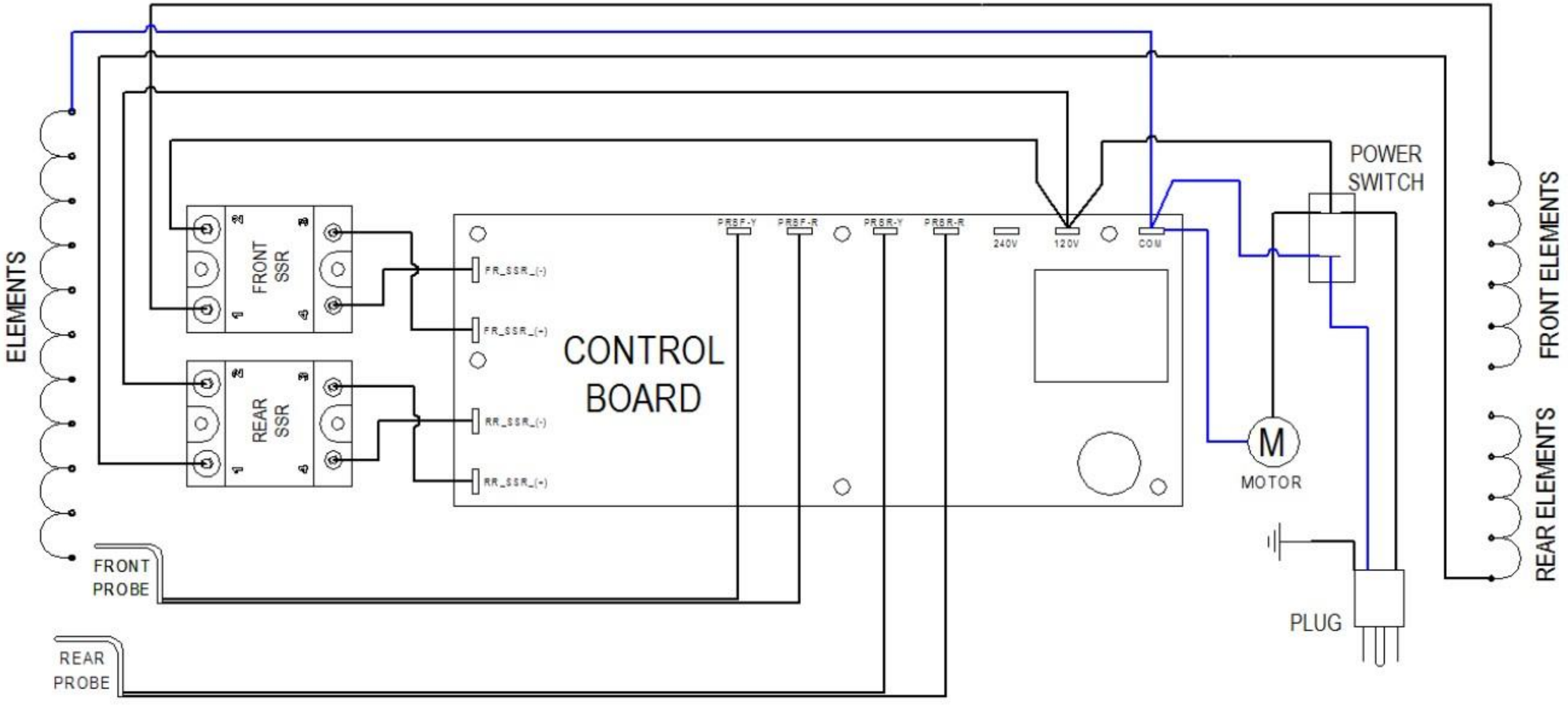
ELEMENTS
FRONT SSR
REAR SSR
CONTROL BOARD
FR_SSR_(-)
FR_SSR_(+)
RR_SSR_(-)
RR_SSR_(+)
PRSF-Y
PRSF-R
PRSR-Y
PRSR-R
240V
120V
COM
POWER SWITCH
M
MOTOR
FRONT ELEMENTS
REAR ELEMENTS
FRONT PROBE
REAR PROBE
PLUG
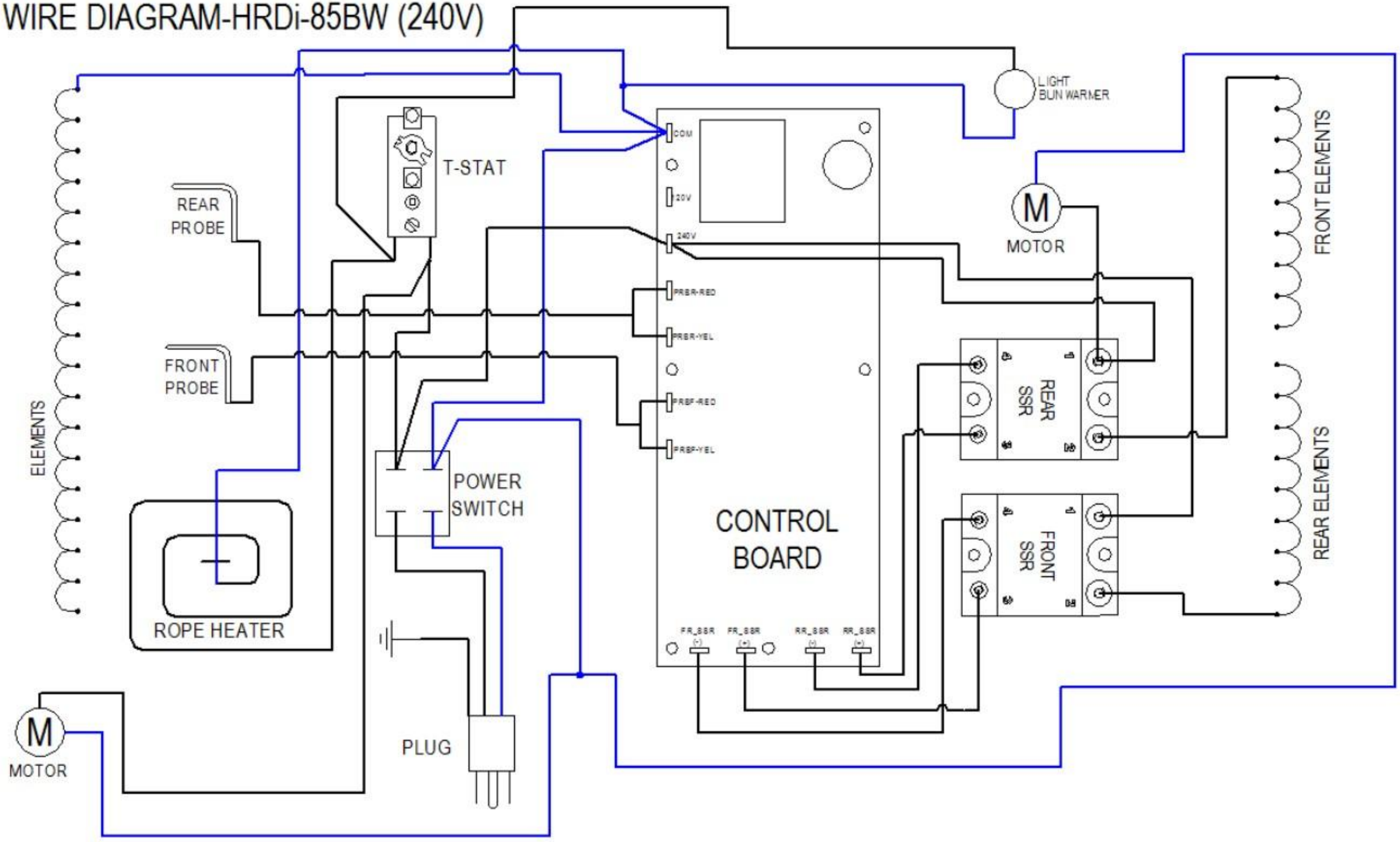
WIRE DIAGRAM-HRDi-85BW (240V)