MENUMASTER®
Commercial

Service Training Manual

RFS Export Subway Model

RFS - 50 Hz
October 2012
16400022

ACP INC.™ New
HIGH PERFORMANCE HAS A NAME™

Table of Contents

Important Safety Information.....1-5
RFS 50 Hz Specifications.....6-8
Installation.....7
Specifications.....8
Quick Start Reference Guide.....9-11
Component Location.....12-13
Disassembly.....14-16
Performance Testing Procedures.....17-18
Component Testing Procedures 19-22
Troubleshooting.....23-28
Schematic / Wiring Diagram.....29-30

1 Important Safety Information

Important Information

Important Notices for Servicers and Consumers

ACP will not be responsible for personal injury or property damage from improper service procedures. Pride and workmanship go into every product to provide our customers with quality products. It is possible, however, that during its lifetime a product may require service. Products should be serviced only by a qualified service technician who is familiar with the safety procedures required in the repair and who is equipped with the proper tools, parts, testing instruments and the appropriate service information. IT IS THE TECHNICIANS RESPONSIBLITY TO REVIEW ALL APPROPRIATE SERVICE INFORMATION BEFORE BEGINNING REPAIRS.

WARNING

To avoid risk of severe personal injury or death, disconnect power before working/servicing on appliance to avoid electrical shock.

To locate an authorized servicer please contact:

ACP, Inc.
225 49th Ave. Dr. SW
Cedar Rapids, IA USA 52404
E-Mail: Commercialservice@acpsolutions.com
Service website: www.acpsolutions.com/service
Tel: 1-319-358-8120

Recognize Safety Symbols, Words, and Labels

DANGER

DANGER— Immediate hazards which WILL result in severe personal injury or death.

WARNING

WARNING— Hazards or unsafe practices which COULD result in severe personal injury or death.

CAUTION

CAUTION— Hazards or unsafe practices which COULD result in minor personal injury, product or property damage.

Important Safety Information

⚠ WARNING

Read the following information to avoid possible exposure to microwave radiation:

The basic design of the Microwave Oven makes it an inherently safe device to both use and service. However, there are some precautions which should be followed when servicing the microwave to maintain this safety. These are as follows:

1. Always operate the unit from an adequately grounded outlet. Do not operate on a two-wire extension cord.

2. Before servicing the unit (if unit is operable) perform the microwave leakage test.

3. The oven should never be operated if the door does not fit properly against the seal, the hinges or hinge bearings are damaged or broken; the choke is damaged, (pieces missing, etc.); or any other visible damage can be noted. Check the choke area to ensure that this area is clean and free of all foreign matter.

4. If the oven operates with the door open and produces microwave energy, take the following steps:
   A. Tell the user not to operate the oven.
   B. Contact ACP ComServ immediately.

5. Always have the oven disconnected when the outer case is removed except when making the "live" tests called for in the Service Manual. Do not reach into the equipment area while the unit is energized. Make all connections for the test and check them for tightness before plugging the cord into the outlet.

6. Always ground the capacitors on the magnetron filter box with an insulated-handle screwdriver before working in the high voltage area of the equipment compartment. Some types of failures will leave a charge in these capacitors and the discharge could cause a reflex action which could make you injure yourself.

7. Always remember that in the area of the transformer there is HIGH VOLTAGE. When the unit is operating keep this area clear and free of anything which could possibly cause an arc or ground, etc.

8. Do not for any reason defeat the interlock switches there is not valid reason for this action at any time; nor will it be condoned by ACP.

9. IMPORTANT: Before returning a unit to a customer, be sure to check for proper switch interlock action.

10. The Microwave Oven should never be operated with any components removed and/or bypassed or when any of the safety interlocks are found to be defective, or when any of the seal surfaces are defective, missing, or damaged.

11. All microwave ovens meet all requirements of the radiation control for Health and Safety Act of 1968. Due to measurement uncertainties, the maximum leakage for the field will be 4mw/cm^2.

12. To ensure that the unit does not emit excessive microwave leakage and to meet the Department of Health and Human Services guidelines, check the oven for microwave leakage using a microwave oven leakage meter that complies with US Government CDRH / FDA / DHHS requirements and or any other local government requirements. The maximum leakage level allowed by ACP is 4mw/cm^2.

13. If servicer encounters an emission reading over 4mw/cm^2, the servicer is to cease repair and contact the ACP ComServ Department immediately for further direction. ACP will contact the proper Government Agency upon verification of the test results.

IMPORTANT SAFETY INSTRUCTIONS

This is the safety alert symbol. It is used to alert you to potential personal injury hazards. Obey all safety messages that follow this symbol to avoid possible injury or death.

WARNING

When using electrical equipment, basic safety precautions should be followed to reduce the risk of burns, electrical shock, fire, or injury to persons including the following.

1. READ all instructions before using equipment.
2. READ AND FOLLOW the specific "PRECAUTIONS TO AVOID POSSIBLE EXPOSURE TO EXCESSIVE MICROWAVE ENERGY" on this page.
3. This equipment MUST BE GROUNDED. Connect only to properly GROUNDED outlet. See " GROUNDING / EARTHING INSTRUCTIONS" on page 5.
4. Install or locate this equipment ONLY in accordance with the installation instructions in this manual.
5. Some products such as whole eggs and sealed containers—for example, closed glass jars—are able to explode and SHOULD NOT be HEATED in this oven.
6. Use this equipment ONLY for its intended use as described in this manual. Do not use corrosive chemicals or vapors in this equipment. This type of oven is specifically designed to heat, cook, or dry food. It is not designed for industrial or laboratory use.
7. As with any equipment, CLOSE SUPERVISION is necessary when used by CHILDREN.
8. See door cleaning instructions on page A-4 of this owners manual.
9. DO NOT heat baby bottles in oven.
10. Baby food jars shall be open when heated and contents stirred or shaken before consumption, in order to avoid burns.
11 DO NOT operate this equipment if it has a damaged cord or plug, if it is not working properly, or if it has been damaged or dropped.
12. This equipment, including power cord, must be serviced ONLY by qualified service personnel. Special tools are required to service equipment. Contact nearest authorized service facility for examination, repair, or adjustment.
13. DO NOT cover or block louvers or other openings on equipment.
14. DO NOT store this equipment outdoors. DO NOT use this product near water – for example, near a kitchen sink, in a wet basement, a swimming pool, or a similar location.
15. DO NOT immerse cord or plug in water.
16. Keep cord AWAY from HEATED surfaces.
17. DO NOT let cord hang over edge of table or counter.
18. For commercial use only.

PRECAUTIONS TO AVOID POSSIBLE EXPOSURE TO EXCESSIVE MICROWAVE ENERGY

A. **DO NOT** attempt to operate this oven with the door open since open door operation can result in harmful exposure to microwave energy. It is important not to defeat or tamper with the safety interlocks.

B. **DO NOT** place any object between the oven front face and the door too allow soil or cleaner residue to accumulate on sealing surfaces.

C. **DO NOT** operate the oven if it is damaged. It is particularly important that the oven door close properly and that there is no damage to the:

   1. door (bent)
   2. hinges and latches (broken or loosened)
   3. door seals and sealing surfaces.

D. The oven should not be adjusted or repaired by anyone except properly qualified service personnel.

SAVE THESE INSTRUCTIONS

IMPORTANT SAFETY INSTRUCTIONS

⚠ WARNING

To avoid risk of fire in the oven cavity:

a. DO NOT overcook food. Carefully attend oven when paper, plastic, or other combustible materials are placed inside the oven to facilitate cooking.

b. Remove wire twist-ties from paper or plastic bags before placing bag in oven.

c. If materials inside the oven ignite, keep oven door CLOSED, turn oven off and disconnect the power cord, or shut off power at the fuse or circuit breaker panel.

d. DO NOT use the cavity for storage. DO NOT leave paper products, cooking utensils, or food in the cavity when not in use.

⚠ WARNING

Liquids such as water, coffee, or tea are able to be overheated beyond the boiling point without appearing to be boiling due to surface tension of the liquid. Visible bubbling or boiling when the container is removed from the microwave oven is not always present. THIS COULD RESULT IN VERY HOT LIQUIDS SUDDENLY BOILING OVER WHEN A SPOON OR OTHER UTENSIL IS INSERTED INTO THE LIQUID. To reduce the risk of injury to persons:

i) Do not overheat the liquid.
ii) Stir the liquid both before and halfway through heating it.
iii) Do not use straight-sided containers with narrow necks.
iv) After heating, allow the container to stand in the microwave oven for a short time before removing the container.
v) Use extreme care when inserting a spoon or other utensil into the container.

⚠ CAUTION

To avoid personal injury or property damage, observe the following:

1. Do not deep fat fry in oven. Fat could overheat and be hazardous to handle.
2. Do not cook or reheat eggs in shell or with an unbroken yolk using microwave energy. Pressure may build up and erupt. Pierce yolk with fork or knife before cooking.
3. Pierce skin of potatoes, tomatoes, and similar foods before cooking with microwave energy. When skin is pierced, steam escapes evenly.
4. Do not operate equipment without load or food in oven cavity.
5. Microwave popcorn should not be popped in oven.
6. Do not use regular cooking thermometers in oven. Most cooking thermometers contain mercury and may cause an electrical arc, malfunction, or damage to oven.
7. Do not use metal utensils in oven.
8. Do not use aluminum foil in oven
9. Never use paper, plastic, or other combustible materials that are not intended for cooking.
10. When cooking with paper, plastic, or other combustible materials, follow manufacturer's recommendations on product use.
11. Do not use paper towels which contain nylon or other synthetic fibers. Heated synthetics could melt and cause paper to ignite.
12. Do not heat sealed containers or plastic bags in oven. Food or liquid could expand quickly and cause container or bag to break. Pierce or open container or bag before heating.
13. To avoid pacemaker malfunction, consult physician or pacemaker manufacturer about effects of microwave energy on pacemaker.
14. An authorized servicer MUST inspect equipment annually. Record all inspections and repairs for future use.

SAVE THESE INSTRUCTIONS

2 RFS511* 50 Hz Specifications

Installation

- Unpacking the oven
- Radio Interference
- Oven Placement

Power Specification

- Input- Power Source
- Output- Power Source
- Power Consumption

Cavity Dimensions

- Weight

Installation

Unpacking Oven

- Inspect oven for damage such as dents in door or dents inside oven cavity.
- Report any dents or breakage to source of purchase immediately. Do not attempt to use oven if damaged.
- Remove all materials from oven interior.
- If oven has been stored in extremely cold area, wait a few hours before connecting power.

Radio Interference

Microwave operation may cause interference to radio, television, or similar a oven. Reduce or eliminate interference by doing the following:

- Clean door and sealing surfaces of oven according to instructions in “Care and Cleaning” section.
- Place radio, television, etc. as far as possible from oven.
- Use a properly installed antenna on radio, television, etc. to obtain stronger signal reception.

⚠WARNING

Excessive Weight Hazard

Use two or more people to move and install oven.

Failure to do so can result in back or other injury.

Oven Placement

- Do not install oven next to or above source of heat, such as pizza oven or deep fat fryer. This could cause microwave oven to operate improperly and could shorten life of electrical parts.
- Do not block or obstruct oven filter. Allow access for cleaning.
- Install oven on level countertop surface.

Oven Clearances

A—Allow at least 2 inches / 5.1 centimeters of clearance around top and sides of equipment. Proper air flow around equipment cools electrical components. With restricted air flow, oven may not operate properly and life of electrical parts is reduced.

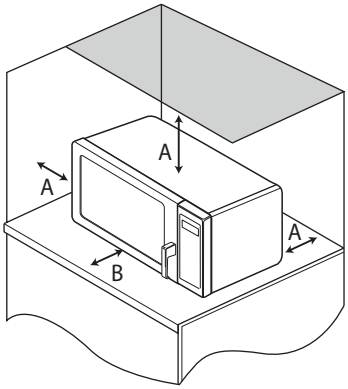

Specifications

Models	RFS511SW2A	RFS511TSW
Power Source		
Voltage AC	230V	230V
Amperage	16 A	16 A
Frequency	50 Hz	50 Hz
Single Phase, 3 wire grounded	X	X
Plug Configuration / Cord	CEE 7/7 “Schuko”	CEE 7/7 “Schuko”
Power Output		
Nominal microwave energy (IEC705)	1100 W	1100 W
Minimum temperature rise	7.7°C / 11°F	7.7°C / 11°F
Operating Frequency	2450 MHz	2450 MHz
Power Consumption		
Cook Condition Microwave	1900 W	1900 W
Dimensions		
Cabinet		
Width	550 mm (21¾”)	550 mm (21¾”)
Height	362 mm (14¼”)	362 mm (14¼”)
Depth	514 mm (20¼”)	514 mm (20¼”)
Cavity Dimensions		
Width	362 mm (14¼”)	362 mm (14¼”)
Height	226 mm (9”)	226 mm (9”)
Depth	416 mm (16⅜”)	416 mm (16⅜”)
Weight		
Crated	28 kg. (61 lbs.)	28 kg. (61 lbs.)
Uncrated	25 kg. (55 lbs.)	25 kg. (55 lbs.)

3 RFS511* 50 Hz Quick Start Reference Guide

Control Panel

- Manual operation
- Programming items
- Qty 2X Pad

Clean Filter

User Options

- Changing options
- Factory presets

Quick Start Reference Guide

Refer to Product Safety Manual for Safety Statements
Complete Owner's Manual available online

CLEAN FILTER

This oven displays CLEAN FILTER at user defined intervals. When the message displays ACP recommends cleaning the air filter thoroughly. **Cleaning the air filter will not shut off the message.** The message will stop displaying automatically after 24 hours. Depending on microwave use and environmental conditions, the filter may need to be cleaned more frequently. Once the frequency is determined, set the option for the appropriate time frame.

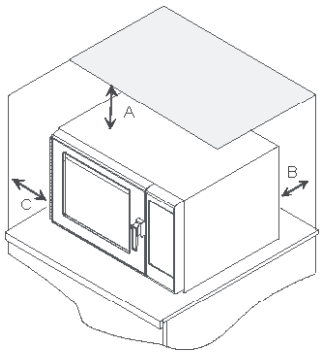

Oven Wall Clearances

A—For North American (UL/CSA) models, allow at least 2" (5.1 cm) of clearance around top of oven. For International (50 Hz) models, allow at least 12" (30 cm) of clearance around top of oven. Proper air flow around oven cools electrical components. With restricted air flow, oven may not operate properly and life of electrical parts is reduced.

B—Allow at least 2" (5.1 cm) between air discharge on back of oven and back wall.

C—Allow at least 2" (5.1 cm) of clearance around sides of oven.

So...how do I use it? (Electronic Control)

7 Preprogrammed Pads

To cook food using preprogrammed cooking sequences:

1. Open oven door and place food in oven. Close door.
2. Press desired pad.
3. Oven begins to cook.
4. At end of cooking cycle oven beeps and shuts off.

QTY 2X Programming *(some models)*

To change the cooking factor:

1. Open oven door.
2. Press and hold pad 1 for approximately 5 seconds.
3. Press pad to be reprogrammed.
4. Press the QTY 2X pad.
5. Press a numbered pad to change the cooking factor.
   - Cooking factor can be set from 10% to 100%.
   - Default is 80%.
   - Pad 5 would change the cooking factor to 50%.
6. Press START pad to save changes.

Manual Operation

To cook food using a specific entered time and power level:

1. Open oven door and place food in oven. Close door.
2. Press TIME ENTRY pad and enter cooking time.
3. Press a power level pad to change power level if desired (some models).
   - **COOK LEVEL** displays with the power setting.
4. If stage cooking is desired, press TIME ENTRY pad and repeat steps 2 through 4, (some models).
5. Press START pad.
6. At end of cooking cycle oven beeps and shuts off.

Programming Items

1. Open oven door.
2. Press and hold pad 1 for approximately 5 seconds.
3. Press pad to be reprogrammed.
4. Enter cooking time by using the number pads.
5. Press a power level pad to change power level if desired.
6. If stage cooking is desired, press TIME ENTRY pad.
   - Display briefly shows the stage number.
   - Display changes to cook time and power level for the next stage.
7. Enter cook time and power level as in steps 4 and 5 (some models).
   - To enter another cooking stage for that pad, press TIME ENTRY pad again.
   - Up to four different stages can be programmed (some models).
8. Press START pad to set new programming changes to the pad.

NOTE: To discard changes, press STOP/RESET pad or close oven door.

QTY 2X Pad (some models)

1. Open oven door and place food in oven. Close door.
2. Press QTY 2X pad.
3. Press desired preprogrammed pad or pad sequence.
4. Oven begins cooking. Displayed cooking time is the total of original cooking time and added 2X time.

The switching operation of this microwave oven can cause voltage fluctuations on the supply line. The operation of this oven under unfavorable voltage supply conditions can have adverse effects. This device is intended for the connection to a power supply system with a maximum permissible system impedance Zmax of **0.2 Ohms** at the interface point of the user's supply. The user has to ensure that this device is connected only to a power supply system which fulfills the requirement above. If necessary, the user can ask the public power supply company for the system impedance at the interface point.

Quick Start Reference Guide

Refer to Product Safety Manual for Safety Statements
Complete Owner's Manual available online

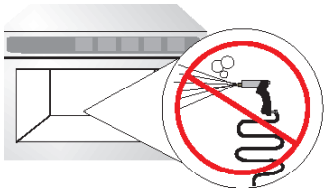

DO NOT power spray

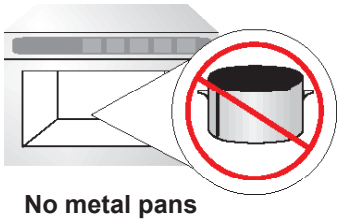

No metal pans

Can I change an option?

Options such as single or double pad programming, beep volume, and maximum cooking time can be changed to suit individual preferences.

To change options:

1. Open oven door.
   - If door is closed or RESET pad is pressed before programming is complete, changes are discarded and microwave exits programming mode.
2. Press and hold pad 2 for approximately 5 seconds.
   - This begins options mode.
   - Microwave will beep and 0P: displays.
3. Press number pad that controls option to be changed.
   - See table below for options.
   - Current option will display.
4. Press number pad again to change the option.
   - Each time pad is pressed, option will change.
   - Match code displayed with code for desired option.
5. Press START pad to save changes.
   - To change additional options, repeat steps 3 and 4.
   - Changes appear after door is closed or STOP/RESET pad is pressed.

Numbered Pads	Display	Options
1 End of Cycle Beep	OP:10	3 second beep.
	OP:11	Continuous beep until door is opened.
	OP:12	5 beep bursts until door is opened.
2 Key Beep Volume	OP:20	Eliminates beep.
	OP:21	Sets volume to low.
	OP:22	Sets volume to medium.
	OP:23	Sets volume to high.
3 Key Beep	OP:30	Prevents beep when pad is pressed.
	OP:31	Allows beep when pad is pressed.
4 Active Display	OP:40	15 seconds after oven door is opened, keyboard disabled.
	OP:41	30 seconds after oven door is opened, keyboard disabled.
	OP:42	1 minute after oven door is opened, keyboard disabled.
	OP:43	2 minutes after oven door is opened, keyboard disabled.
5 On-the Fly Cooking	OP:50	Prevents different pre-programmed pads to be activated during cooking.
	OP:51	Allows different pre-programmed pads to be activated during cooking.
6 Reset to Ready Mode	OP:60	Opening oven door does not reset oven back to ready mode.
	OP:61	Opening oven door resets oven back to ready mode.
7 (some models) Maximum Heating Time	OP:70	Allows 60 minutes of heating time (some models).
	OP:71	Allows 10 minutes of heating time.
8 Manual Operation	OP:80	Allows use of preprogrammed pads only.
	OP:81	Allows use of manual time entry and preprogrammed pads.
9 (some models) Double Digit Operation	OP:90	Allows 10 (0-9) preprogrammed pads.
	OP:91	Allows 100 (00-99) preprogrammed pads.
0 Clean Filter Message	OP:00	Do not display message.
	OP:01	Display message for 24 hours every 7 days.
	OP:02	Display message for 24 hours every 30 days.
	OP:03	Display message for 24 hours every 90 days.

Part No.12804405

4 RFS511* 50 Hz Components Location

Components Location

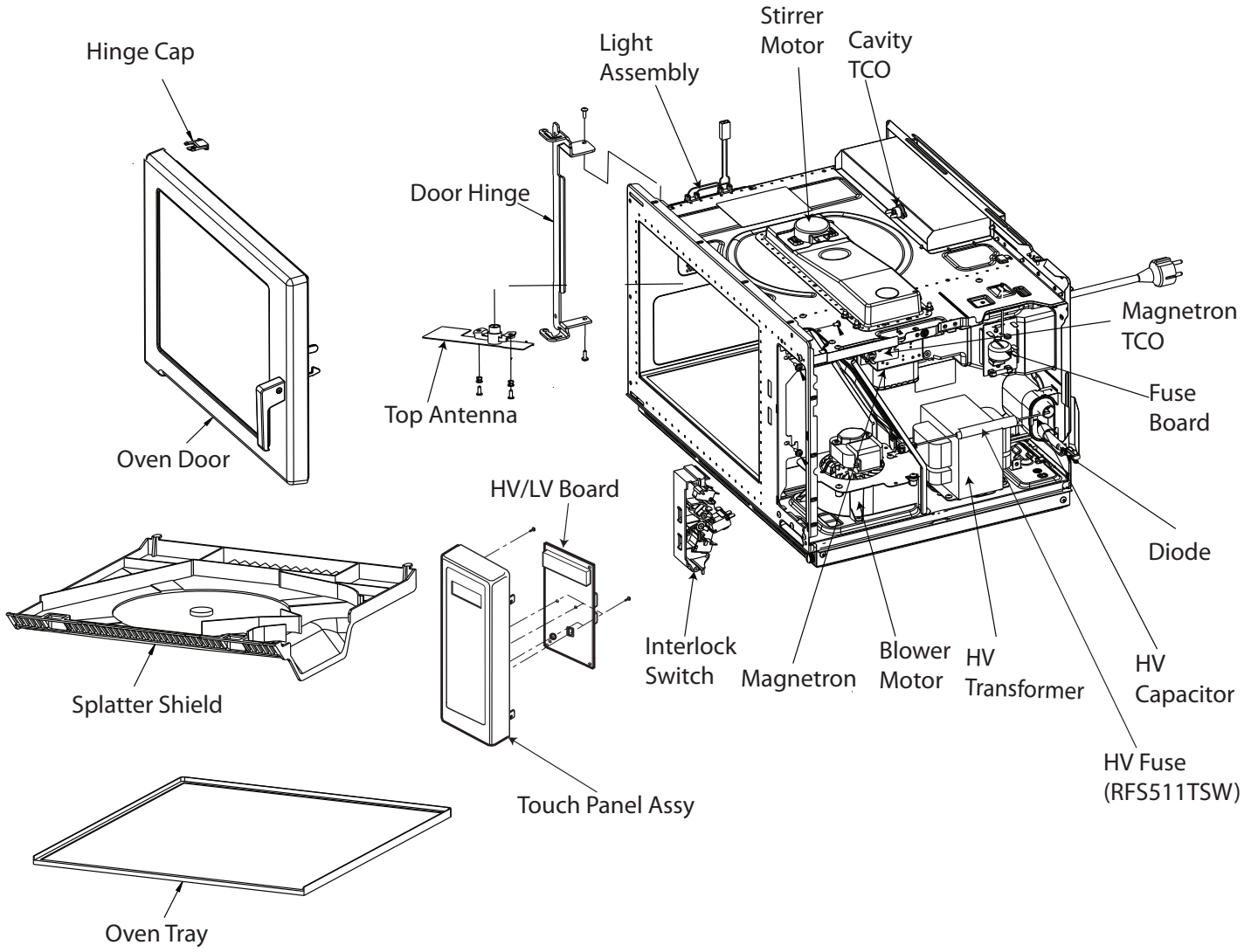

5 Disassembly

Door removal

・Disassembly

Control panel removal

・Wire terminals

Disassembly

Door Removal

1. Disconnect power to oven.
2. Open oven door, remove top hinge cap, and slowly lift door to disengage the hinge pins at top and bottom.

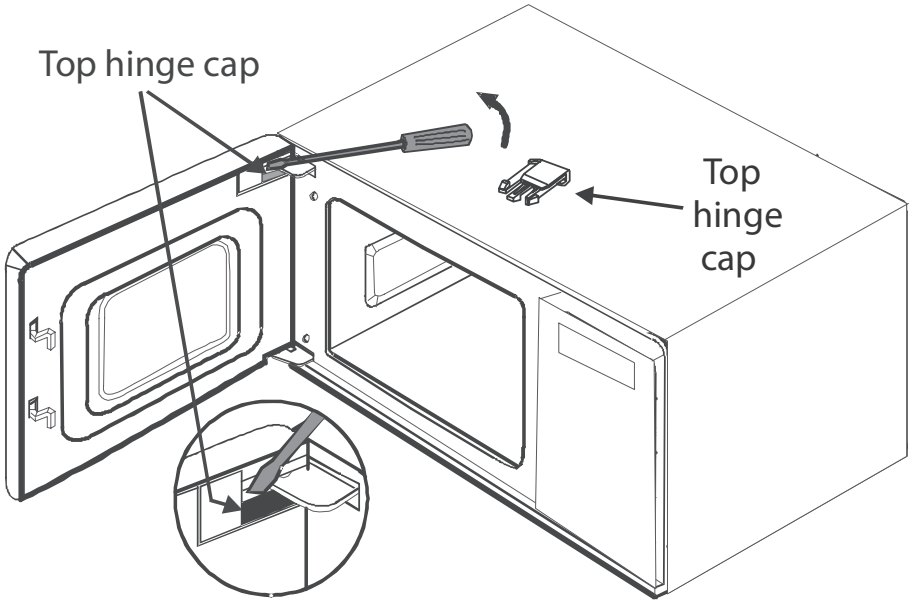

3. To reinstall door, place top pin into slot first, then align bottom pin.
4. Reinstall top hinge cap.

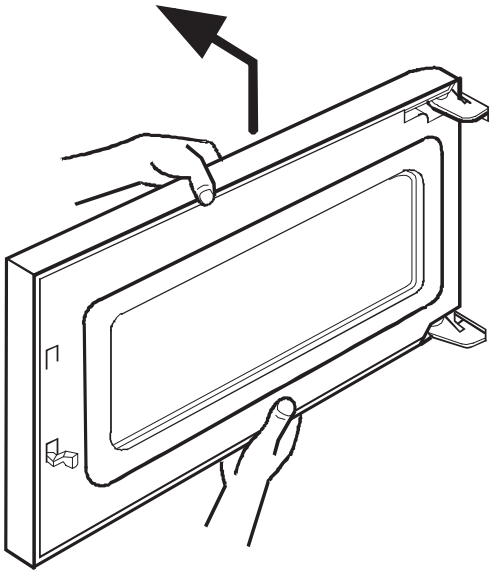

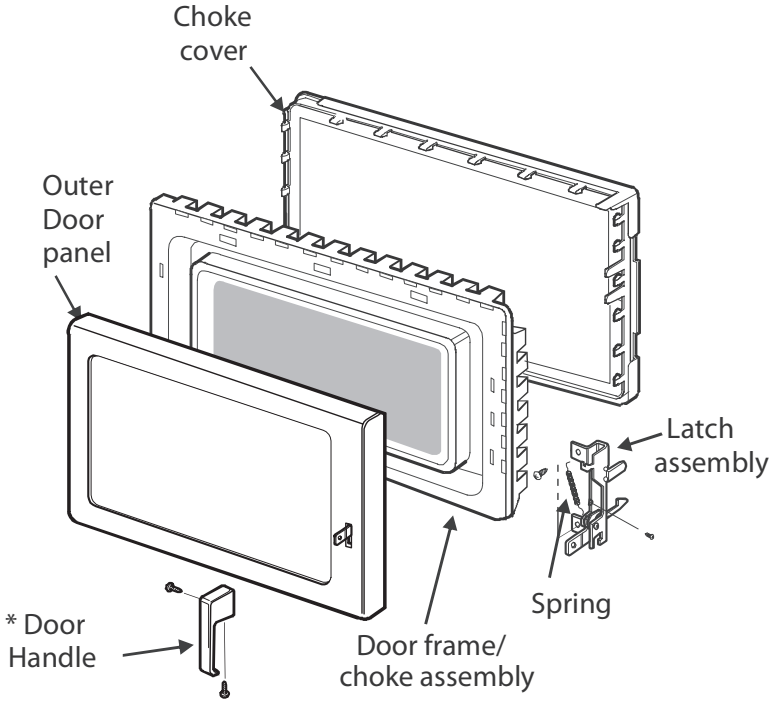

* Apply thread lock compound to threads, tighten side screw first.

Disassembly

Control Panel Removal

1. Disconnect power to oven and remove outer case.
2. Disconnect and label wires from controller/timer.
3. Open oven door.
4. Remove screw securing top of control panel to cavity. Lift control panel up and out to release tabs.

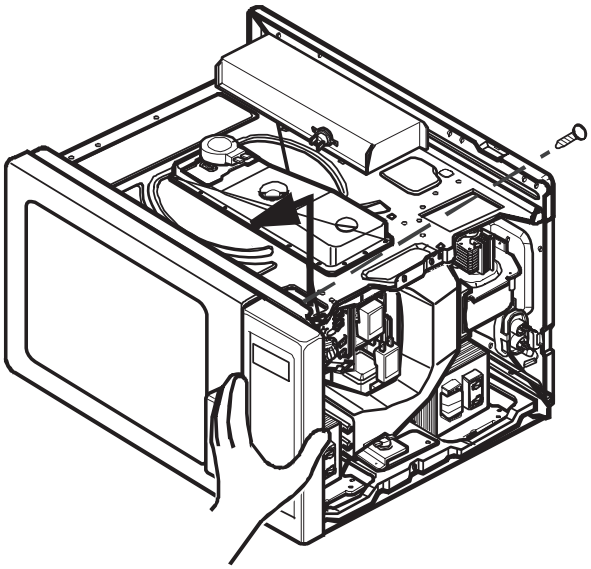

Disconnecting Wire Terminals

All wire terminals are locking-type terminals.
Proceed as follows to disconnect wire terminals:

Insulated terminals:
Grasp insulator pod and pull back. DO NOT PULL ON WIRE.

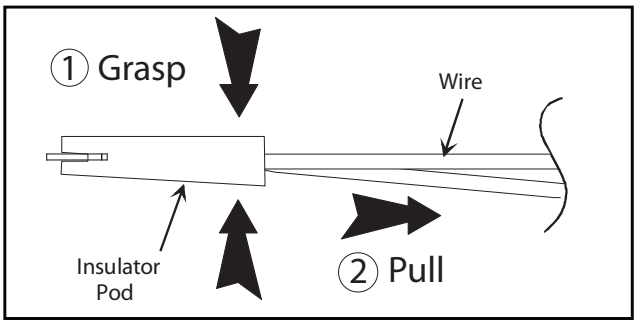

Non-insulated terminals:
Use a small blade screwdriver to depress locking-tab and pull on terminal. DO NOT PULL ON WIRE.

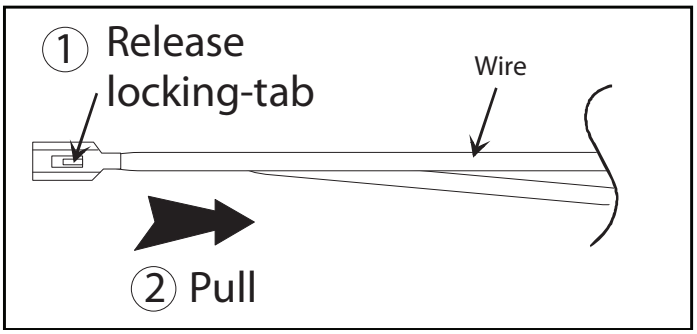

6 Performance Testing Procedures

Performance Testing Procedures

⚠ WARNING

To avoid risk of electrical shock, personal injury or death, disconnect power to oven and discharge capacitor before servicing, unless testing requires it.

All Amana and Menumaster microwave oven power outputs are rated using the IEC705 standards. Using the IEC705 test method requires precision measurements and equipment that is not practical to be performed in the field. Using the test shown below will indicate if the oven performance is satisfactory.

Test equipment required:

- 1000 ml test container and thermometer.
- Digital watch / watch with a second hand for use on ovens with electromechanical timers.

Important Notes:

- Low line voltage will cause low temperature rise / power output.
- Ovens must be on a dedicated circuit, properly grounded, and polarized. Other equipment on the same circuit may cause a low temperature rise / power output.
- This test and results are not a true IEC705 test procedures and are only intended to provide servicers with an easy means of determining if the microwave oven cooking output is correct.

Procedure

1. Fill the test container to the 1000 ml line with cool tap water.

NOTE: Water temperature should be approximately 60°F / 16°C

2. Using the thermometer, stir water for five to ten seconds; measure, and record the temperature (T1).
3. Place test container of water in the center of oven cavity and close door.
4. Heat the water for a 33-second full power cycle.

NOTE: Use a digital watch or a watch with a second hand for ovens with electromechanical timers.

5. At end of the cycle, remove test container. Using the thermometer, stir water for five to ten seconds and record temperature (T2).
6. Subtract the starting water temperature (T1), from the ending water temperature (T2) to obtain the temperature rise (ΔT).
7. If the temperature rise (ΔT) meets or exceeds the minimum, the test is complete. If the temperature rise (ΔT) fails to meet the minimum temperature rise, test the line voltage to verify it is correct. Then repeat steps 1 - 6 making sure to change the water. If the temperature rise (ΔT) fails to meet the minimum temperature rise again the oven will require service.

Minimum Temperature Rise at Thirty -Three (33) Seconds Run Time

ΔT (°F)	Cooking Power Output	ΔT (°F)	Cooking Power Output	ΔT (°C)	Cooking Power Output	ΔT (°C)	Cooking Power Output
10	1000	20	2000	5	1000	11	2000
11	1100	21	2100	5.5	1100	11.5	2100
12	1200	22	2200	6.5	1200	12	2200
14	1400	24	2400	7.5	1400	13	2400
17	1700	25	2500	9.5	1700	13.5	2500
18	1800	27	2700	10	1800	15	2700
19	1900	30	3000	10.5	1900	16.5	3000

7 Component Testing Procedures

Component Testing Procedures

WARNING

To avoid risk of electrical shock, personal injury or death, disconnect power to oven and discharge capacitor before servicing, unless testing requires it.

Illustration	Component	Testing	Results
	Thermal cutout	Disconnect all wires from TCO. Measure resistance across terminals. Cavity TCO ..... Magnetron TCO	 Opens at 230°F (110°C) Closed at 140°F (60 °C) and Opens at 320 °F (160 °C)
	Diode	Discharge Capacitor Remove diode lead from capacitor and connect ohmmeter. Reverse leads for second test.	Infinite resistance should be measured in one direction and 50KΩ or more in the opposite direction. NOTE: Ohmmeter must contain a battery of 6 volts minimum.
	Circuit Protector	Discharge Capacitor Remove diode lead from capacitor and connect ohmmeter. Reverse leads for second test.	Infinite resistance should be measured in one direction and 50KΩ or more in the opposite direction. NOTE: Ohmmeter must contain a battery of 6 volts minimum.
	Capacitor	Discharge Capacitor Remove wires from capacitor terminals and connect ohmmeter, set on highest resistance scale to terminals. Also check between each terminal and capacitor case.	 Between Terminals: Meter should momentarily deflect towards zero then return to over 5 M Ω. If no deflection occurs, or if continuous deflection occurs, replace capacitor. Terminal to Case: Infinite resistance
	Magnetron	Discharge Capacitor Remove wires from magnetron and connect ohmmeter to terminals. Also check between each terminal and ground.	Between Terminals: Less than 1 Ω Each terminal to ground measures Infinite resistance. Note: This test is not conclusive. If oven does not heat and all other components test good replace the magnetron and retest.
	Blower motor	Remove all wires from motor. Measure resistance across coil.....	 Approximately 72 – 82 Ω
	Stirrer motor	Remove all wires from motor. Measure resistance across terminals....	 Approximately 12.8 – 13.5 K Ω
Secondary Filament Primary	Transformer	Discharge Capacitor Remove all wires from terminals. Measure resistance from: Primary..... Filament..... Secondary to Ground screw on transformer stack.....	 Less than <1 Ω Less than <1 Ω Approximately 136 Ω (RFS511TSW) Approximately 110 – 125 Ω (RFS511SW2A)
	Noise filter board	Power In terminals ..... Power Out terminals.....	230/240 VAC 230/240 VAC If no power in, check power outlet. If no power out, check fuses.
	Lamp receptacle	Test continuity of receptacle terminals.	Indicates continuity with bulb installed.
	Wire Harness	Test continuity of wires	Indicates continuity

Component Testing Procedures

WARNING

To avoid risk of electrical shock, personal injury or death, disconnect power to oven and discharge capacitor before servicing, unless testing requires it.

Illustration	Component	Testing	Results
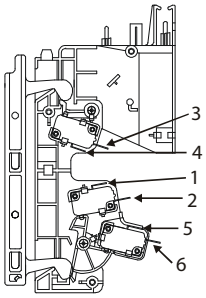	Interlock switch assembly 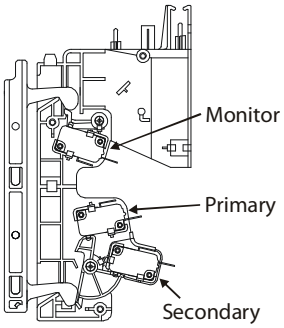	Disconnect wires to switch. With door open measure resistance from: Monitor - Terminal 3 - 4 ..... Primary - Terminal 1 - 2..... Secondary - Terminal 5 - 6 ..... With door closed measure resistance from: Monitor - Terminal 3 - 4 ..... Primary - Terminal 1 - 2..... Secondary - Terminal 5 - 6 ..... After verifying or replacing the module, reconnect wires to switch and check operation of monitor circuit before operating the oven.	 Indicates continuity Infinite Ω Infinite Ω Infinite Ω Indicates continuity Indicates continuity

Electronic Control Panel			
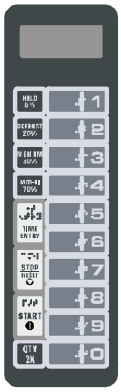	Service Test Mode:	Open door, Press and Hold pad 3 for 5 seconds to enter service test mode. Press Pad 1..... Press Pad 2..... Press Pad 3..... Press Pad 4..... Press Pad 5..... Press Pad 6..... Press Pad 7..... Press Pad 8..... Press Pad 9..... Press Pad 0..... Stop/Reset Pad	SERVICE appears in the display Indicates number of hours magnetron has been turned on Indicates number of times magnetron tube cycles Indicates number of door cycles CLEAR (Press START pad to reset service data.) Indicates amperage (Top Mag) Indicates amperage (Bottom Mag) RESET (Call Service) N/A N/A N/A Exit Service Test Mode
	Error codes:	E-08 ..... E-09 ..... E-10	Replace Control Board Replace Control Board Shorted or Open Keypad – Test and replace if necessary

Component Testing Procedures

WARNING

To avoid risk of electrical shock, personal injury or death, disconnect power to oven and discharge capacitor before servicing, unless testing requires it.

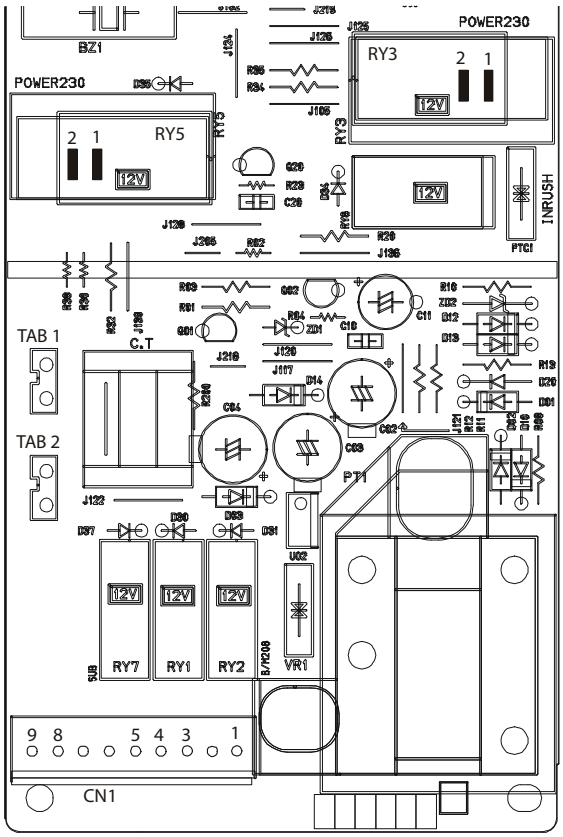

Function	Test Set-Up / Condition	Meter Setting	Probe Placement	Results
Control power transformer input	All Conditions	Volts	CN1 – Pin 3 to Pin 1 (White to Black)	230/240 VAC
Oven light relay RY7	Standby	Volts	CN1 – Pin 4 to Pin 1 (Yellow to Black)	0 VAC
	Ready	Volts	CN1 – Pin 4 to Pin 1	230/240VAC
	Cook	Volts	CN1 – Pin 4 to Pin 1	230/240VAC
Blower / Stirrer motor relay RY1	Standby	Volts	CN1 – Pin 5 to Pin 3 (Brown to White)	230/240VAC
	Ready	Volts	CN1 – Pin 5 to Pin 3	0 VAC
	Cook	Volts	CN1 – Pin 5 to Pin 3	0 VAC
Secondary Interlock Switch	Door Closed	Ohms	CN1 – Pin 8 to Pin 9 (Pink to Green)	< 1 Ω
	Door Opened.....	Ohms	CN1 – Pin 8 to Pin 9	Infinite
Cook relay RY3	Standby	Volts	Relay 3 – Pin 1 to Pin 2	230/240VAC
	Ready	Volts	Relay 3 – Pin 1 to Pin 2	230/240VAC
	Cook	Volts	Relay 3 – Pin 1 to Pin 2	0 VAC

8 Troubleshooting

Troubleshooting

WHEN YOU GET A COMPLAINT FROM YOUR CUSTOMER, EVALUATE THE COMPLAINT CAREFULLY. IF THE FOLLOWING SYMPTOMS APPLY, PLEASE INSTRUCT THE CUSTOMER IN THE PROPER USE OF THE MICROWAVE OVEN. THIS CAN ELIMINATE AN UNNECESSARY SERVICE CALL.

1. Check grounding before checking for trouble.
2. Be careful of the high voltage circuit.
3. Discharge the high voltage capacitor.
4. When checking the continuity of the switches or of the high voltage transformer, disconnect one lead wire from these parts and then check continuity with the AC plug removed. To do otherwise may result in a false reading or damage to your meter.
5. Do not touch any part of the circuit on the PCB since static electric discharge may damage this control panel.
   Always touch yourself to ground while working on this panel to discharge any static charge built up in your body.

CONDITION	CAUSE	REMEDY
Microwave oven does not work.	Inserting many plugs into one outlet and using them at the same time (blown fuse or breaker)	Avoid using other electrical appliances when you use the microwave oven.
	Microwave oven plug is not inserted tightly.	Insert microwave oven plug securely.
Output power is too low.	Low AC input voltage.	Use the microwave oven at adequate line voltage.
	Food temperature is too low.	This may not be a defect. It is possible that the food should be cooked for a longer time period.
Sparks occur.	Using metallic ware and allowing it to touch the oven wall.	Do not use metallic ware for cooking except that noted in the cooking guide.
	Ceramic ware trimmed in gold or silver powder is used.	Do not use any type of cookware with metallic trimming.
Uneven cooking.	Inconsistent intensity of microwave by their characteristics.	1. Use plastic wrap or lid. 2. Stir once or twice while cooking soup, cocoa or milk, etc.
	Display “CALL SERVICE”	See Service Test Mode page 21 to clear CALL SERVICE .

Troubleshooting

Trouble 1: The following visual conditions indicate a probable failed control circuit.

1. Incomplete segments.
   - Segment missing.
   - Partial segment missing.
   - Digit flickering (Note: Slight flickering is normal.)
2. Colon does not turn on or blink.
3. A distinct change in the brightness of one or more numbers in display.
4. One or more digits in the display are not lighting.
5. Display indicates a number different from one touched, for example, key in 5 and 3 appears in the display.
6. Specific numbers (for example 7 or 9) will not display when key pad is touched.
7. Display does not count down with time blinking or up with clock operation.
8. Display obviously jumps in time while counting down.
9. Display counts down too fast while cooking.
10. Each indicator light does not turn on after setting cooking cycle.
11. Display time of day does not reappear when cooking is finished.

CONDITION	CHECK	RESULT	CAUSE	REMEDY
1. No input can be programmed.	Check the connection between membrane key assembly and PCB assembly.	Continuity.	Defective PCB assembly.	Replace PCB assembly.
		No continuity.	Loose connection.	Connect them tightly.
2. Some inputs cannot be programmed.	Replace key membrane assembly and check operation.	Everything works as specified.	Defective key membrane assembly.	Replace key membrane assembly.
3. Display shows a number or figure different from one touched.		Still have trouble.	Defective PCB assembly.	Replace PCB assembly.
4. Random programming when touching other pads.				
5. Display is fixed at some figure and can not accept any input.				

Troubleshooting

Trouble 2: Oven does not operate at all, Display window does not display any figures, and no input is accepted.

CONDITION	CHECK	RESULT	CAUSE	REMEDY
1. Fuse blows.	Check continuity of monitor switch (with door closed).	Continuity.	Malfunction of the monitor switch.	Replace fuse, interlock assembly
		No continuity.		
	Replace fuse			
	Check continuity of primary switch (with door opened).	Continuity.	Shorted contact at the primary switch.	Replace fuse, interlock assembly
		No continuity.		
	Check continuity of secondary switch (with door opened).	Continuity.	Malfunction of secondary switch.	Replace fuse, interlock assembly
		No continuity.		
	Disconnect one side of the wire lead connected from transformer to the high voltage capacitor and operate the unit.	Fuse blows again	Defective high voltage transformer.	Replace high voltage transformer.
		Normal.		
	Measure to resistance high voltage capacitor (refer to page 20)	Normal.		Set is good condition (defective fuse only)
		Abnormal.	Defective high voltage capacitor.	Replace high voltage capacitor.
2. Fuse does not blow.	Check continuity of oven TCO.	No continuity.	Defective oven TCO.	Replace oven TCO.
		Continuity.		
	Check continuity of power supply cord.	No continuity.	Defective power supply cord.	Replace power supply cord.

Troubleshooting

Trouble 3: Display shows all figures set, but oven does not start cooking while desired program times are set and START pad is touched.

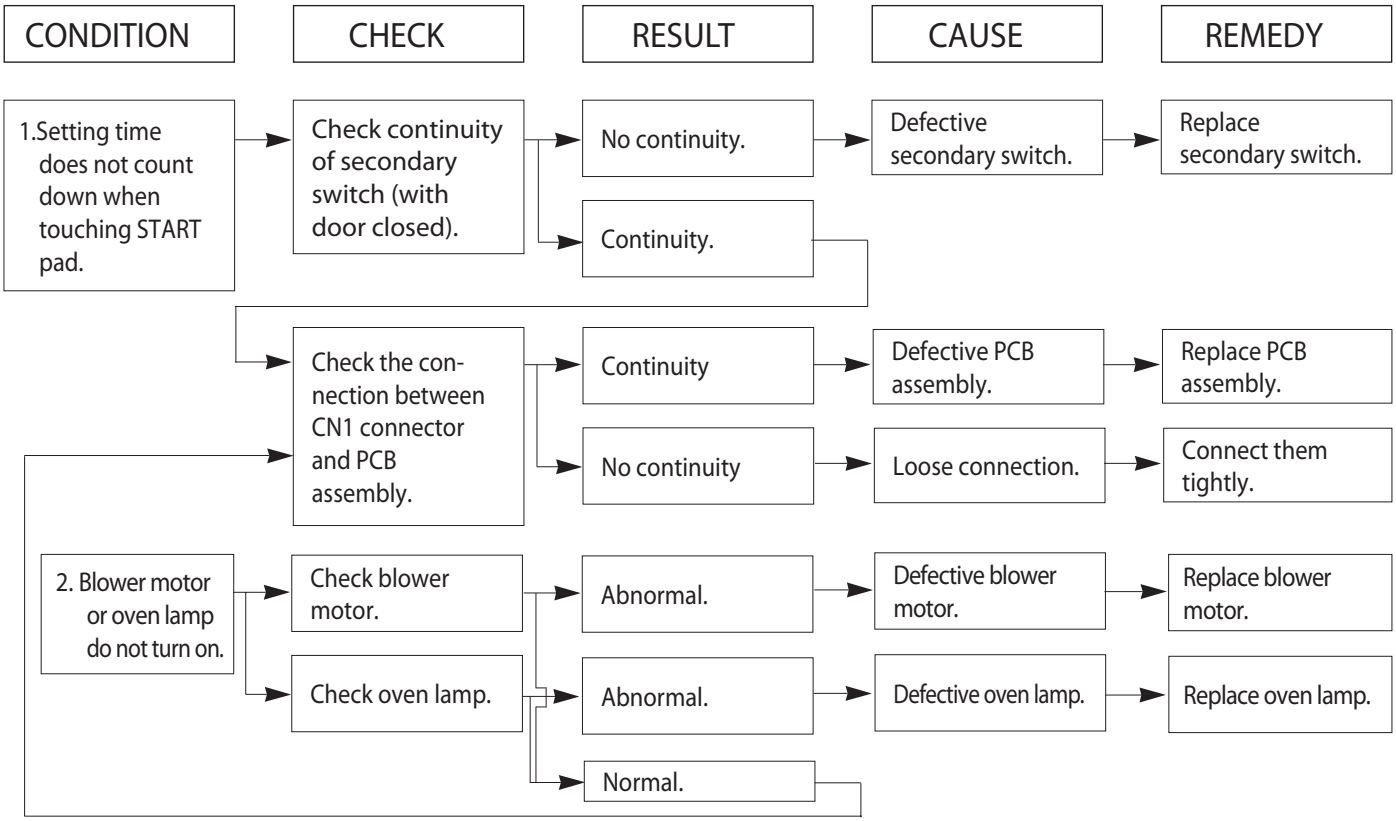

Trouble 4: Oven seems to be operating but little heat is produced in oven load.

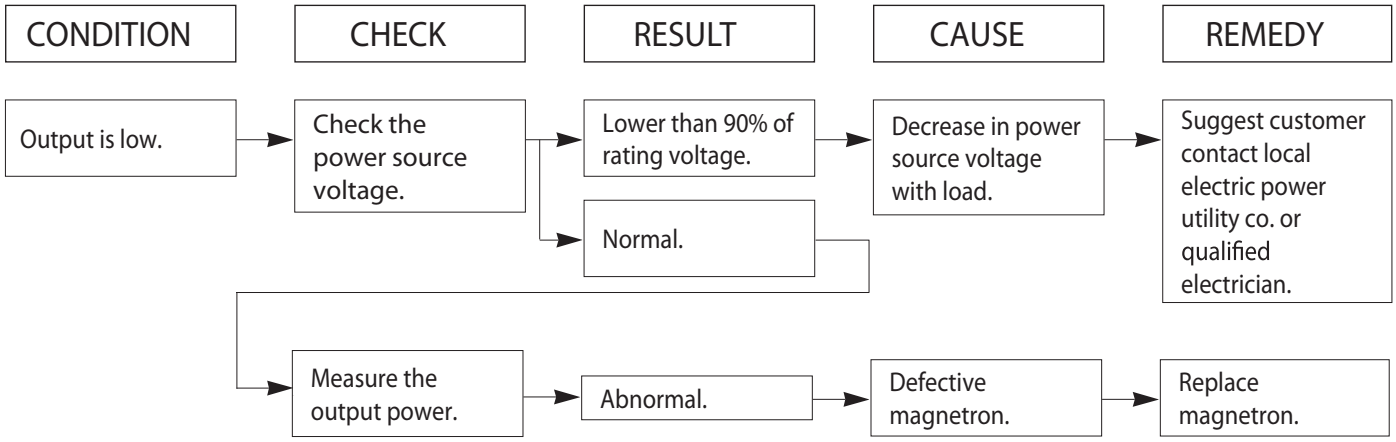

Troubleshooting

TROUBLE 5: No microwave oscillation even though oven lamp and blower motor run. (Display operates properly)

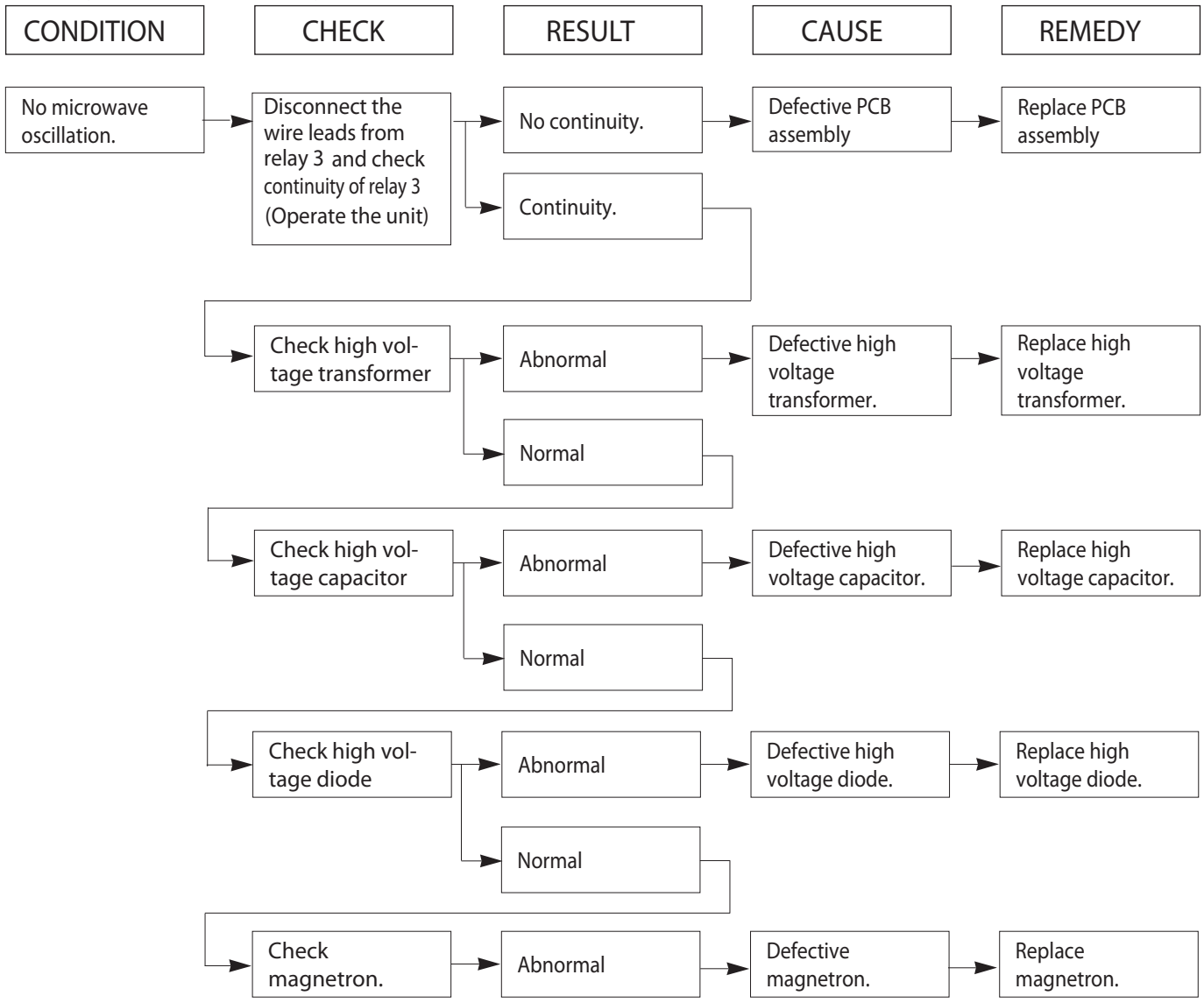

NOTE : • Make sure the wire leads are in the correct position.
• When Removing the wire leads from the parts, be sure to grasp the connector, not the wires.
• When removing the magnetron, be sure to install the magnetron gasket in the correct position and in good condition.

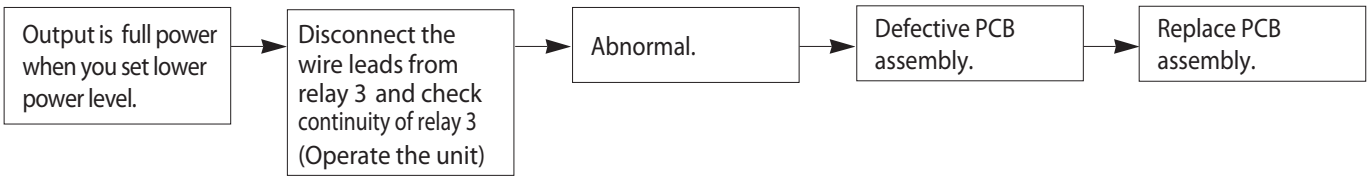

9 Schematic / Wiring Diagrams

Schematic / Wiring Diagram

WARNING

To avoid risk of electrical shock, personal injury or death, disconnect power to oven and discharge capacitor before servicing, unless testing requires it.

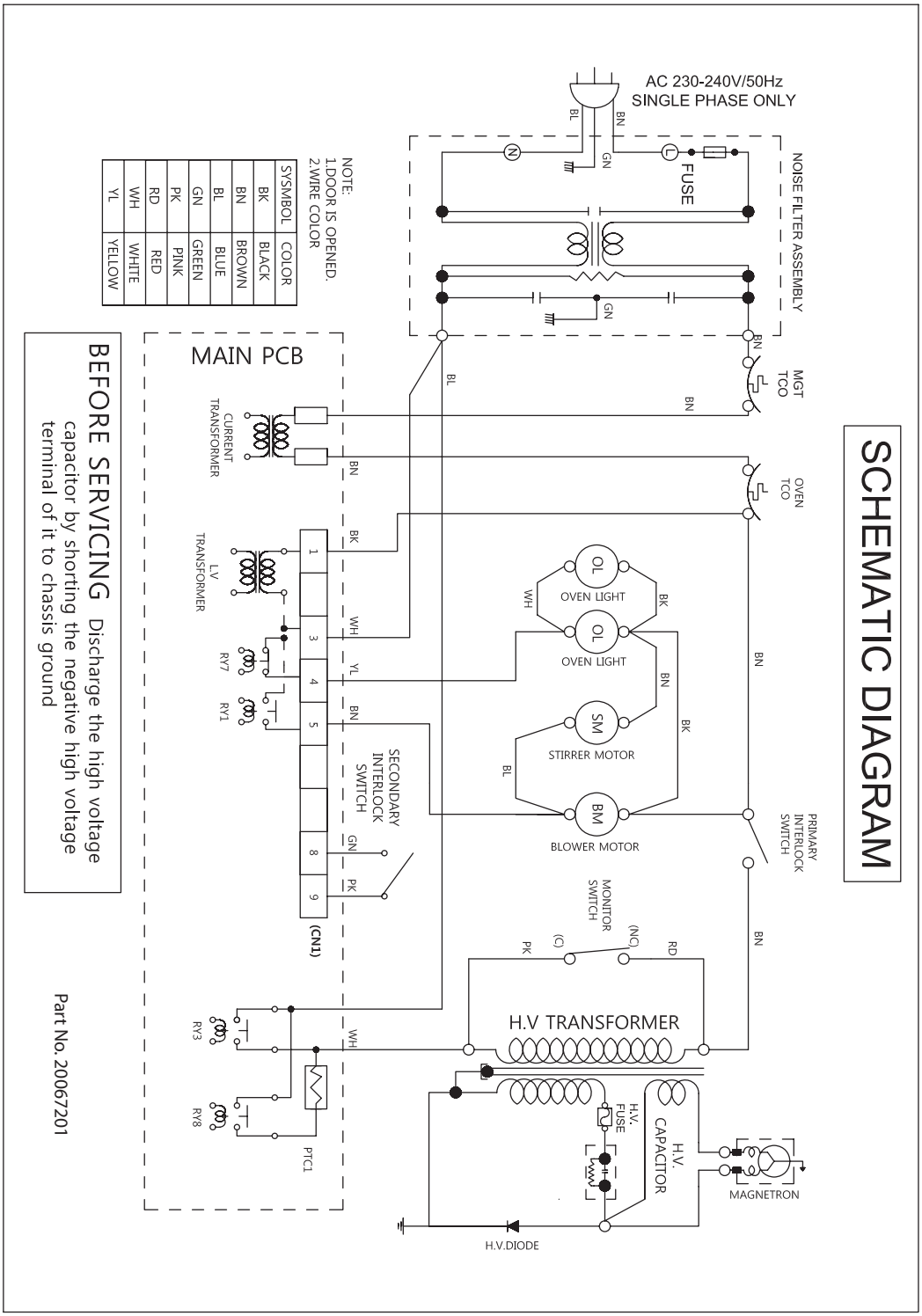

DANGER

HIGH VOLTAGE

Notes:

Part No. 16400022
Printed in U.S.A. 10/12

www.acpsolutions.com

© 2012 ACP Inc.
Cedar Rapids, Iowa 52404