Amana®

MENUMASTER®
COMMERCIAL MICROWAVE OVEN

Service

This manual is to be used by qualified appliance technicians only. Maytag does not assume any responsibility for property damage or personal injury for improper service procedures done by an unqualified person.

International Countertop Commercial Microwave Ovens

This Base Manual covers general information.

Refer to individual Technical Sheet for information on specific models.

This manual includes, but is not limited to the following:

RC520S	P1327601M
RC518SU	P1327602M
RC5MCTP	P1327603M
RC5PHBU	P1327606M
RC5PHB	P1327607M
RC5MCSP	P1327608M
RC5MCSS	P1327609M
RC5MCTS	P1327610M
RC5KFT	P1327611M
RC5MDTS	P1327612M
MRC518SU	P1327613M
MRC520S	P1327614M
RC5MDTM	P1327615M
RC518SU2	P1331416M
RC520S2	P1331417M
RC5MCSP2	P1331418M
RC518U2	P1331419M
MRC520S2	P1331420M
RC5PHBU2	P1331421M
RC5PHB2	P1331422M
RC520T2	P1331423M
RC5KFT2	P1331424M
RC5MCTP2	P1331425M
RC5MCTS2	P1331426M
RC5MDTS2	P1331427M
RC5MDTM2	P1331428M

MAYTAG®

16022149
May 2005

Important Information

Important Notices for Servicers and Consumers

Maytag will not be responsible for personal injury or property damage from improper service procedures. Pride and workmanship go into every product to provide our customers with quality products. It is possible, however, that during its lifetime a product may require service. Products should be serviced only by a qualified service technician who is familiar with the safety procedures required in the repair and who is equipped with the proper tools, parts, testing instruments and the appropriate service information. **IT IS THE TECHNICIANS RESPONSIBILITY TO REVIEW ALL APPROPRIATE SERVICE INFORMATION BEFORE BEGINNING REPAIRS.**

WARNING

To avoid risk of severe personal injury or death, disconnect power before working/servicing on appliance to avoid electrical shock.

To locate an authorized servicer, please consult your telephone book or the dealer from whom you purchased this product. For further assistance, please contact:

Service Support Center

Contact your local product distributor or vist the Web site at www.amanacommercial.com.

Recognize Safety Symbols, Words, and Labels

DANGER

DANGER—Immediate hazards which **WILL** result in severe personal injury or death.

WARNING

WARNING—Hazards or unsafe practices which **COULD** result in severe personal injury or death.

CAUTION

CAUTION—Hazards or unsafe practices which **COULD** result in minor personal injury, product or property damage.

©2005 Maytag Services

Table of Contents

Important Information 2
Important Safety Information 4
- Wiring 8
- Earthing Instructions 8
- Servicing of Earthing Products 8

General Information
- Unpacking Oven 9
- Oven Placement 9
- Radio Interference 9
- Earthing Instructions 9
- Microwave Oven Description 10

Troubleshooting
- Power up 11
- Standby Condition 12
- Cook Condition 13

Component Testing Procedures 14
Power Testing Procedure
- Power Test 21

Display Diagnostics
- Error Codes 22

Service Test 23-24
Service Information
- Proper Handling of Magnetron Tubes 25
- Magnetron Failure Modes 25
- Operating Instructions for the Holaday HI1501, HI1510, HI1710, and HI1801 26

Microwave Leakage Test
- Equipment 27
- Procedure For Measuring Radiation Leakage 27
- Measurement With the Outer Panel Removed 27
- Measurement With a Fully Assembled Oven 27
- Record Keeping and Notification After Measurement 27

Disassembly
- Door Handle 28
- Door 28
- Outer Door 28
- Inner Door Ring Assembly 28
- Hinge 28
- Outer Case 29
- Back Panel 29
- Splatter Shield 29
- Top Touch Panel Assembly 29
- Side Touch Panel Assembly 29
- High Voltage Circuit Board 29
- Interlock Switch Module 30
  - Adjustment 30
- Display Module 30
- Top Rear Magnetron 30
- Top Front Magnetron 30
- Bottom Magnetron 30
- Magnetron Cutout (TCO) 31
- Cavity Thermal Cutout (TCO) 31
- Triacs 31
- Capacitor 31
- Transformer 31
- Auto Transformer 31
- Microwave Blower Wheel and Motor 31
- Fan Blade 31
- Top Antennas 32
- Bottom Antenna 32
- Antenna Motors 32
- Oven Tray Removal / Installation 32
- Fuse 33
- Power Cord 33
- Light Socket 33
- Relay 33
- Line Filter 33
- Replacing Oven Light Bulb 33
- Component Location 34-36

PRECAUTIONS TO AVOID POSSIBLE EXPOSURE TO EXCESSIVE MICROWAVE ENERGY

(a) **DO NOT** attempt to operate this oven with the door open since open-door operation can result in harmful exposure to microwave energy. It is important not to defeat or tamper with the safety interlocks.
(b) **DO NOT** place any object between the oven front face and the door or allow soil or cleaner residue to accumulate on sealing surfaces.
(c) **DO NOT** operate the oven if it is damaged. It is particularly important that the oven door close properly and that there is no damage to the: (a) Door (bent), (b) hinges and latches (broken or loosened), (c) door seals and sealing surfaces.
(d) The oven should **NOT** be adjusted or repaired by anyone except properly qualified service personnel.

PRECAUTIONS A PRENDRE POUR EVITER LES RISQUES D'EXPOSITION A DES QUANTITES EXCESSIVES D'ENERGIE MICRO-ONDE

(a) **NE PAS** essayer de faire marcher le four avec la porte ouverte car cela risque d'exposer l'utilisateur à une quantité nocive d'énergie micro-onde. Ne jamais supprimer ou altérer les verrouillages de sécurité.
(b) **NE RIEN METTRE** entre la face avant du four et la porte et ne pas laisser de saletés ou de produits de nettoyage s'accumuler sur les surfaces d'étanchéité.
(c) **NE JAMAIS** faire fonctionner le four s'il est endommagé. Il est tout particulièrement important que la porte du four se ferme correctement et que les éléments suivants fonctionnent sans problème : a) la porte (faussée), b) les charnières et les verrouillages (cassés ou desserrés), c) les joints et les surfaces d'étanchéité de la porte.
(d) Le four **NE DOIT ETRE** réparé que par des réparateurs qualifiés.

PRECAUCIONES PARA EVITAR LA POSIBLE EXPOSICION EXCESIVA A LA ENERGIA DE MICROONDAS

(a) **NO** intente hacer funcionar este horno con la puerta abierta ya que podría resultar en una exposición dañina a la energía de microondas. Es muy importante no pasar por alto o averiar los interruptores de seguridad.
(b) **NO** coloque ningún objeto entre el frente del horno y la puerta. Tampoco permita que suciedad o residuos de limpiador se acumulen en las superficies de sellado del aparato.
(c) **NO** haga funcionar el horno si éste estuviera averiado. Es de particular importancia que la puerta del horno se cierre correctamente y que no existan daños en: (a) la puerta (dobladuras), (b) las bisagras y el pestillo (rotos o flojos), (c) los sellos de las puertas y otras superficies de sellado.
(d) El horno **NO** deberá ser ajustado o reparado por ninguna persona excepto personal de servicio propiamente calificado.

VORSICHTSMASSNAHMEN ZUM SCHUTZ GEGEN MIKROWELLENSTRAHLUNG

(a) **NICHT** versuchen, den Herd mit offener Tür zu betreiben, da Sie dadurch schädlicher Mikrowellenstrahlung ausgesetzt werden können. Auf keinen Fall die Sicherheitsverriegelung unwirksam machen oder ändern.
(b) **KEINE** Gegenstände zwischen Herd und Tür einklemmen oder Schmutz und Rückstände von Reinigungsmitteln auf den Dichtflächen sich ansammeln lassen.
(c) **KEINEN** beschädigten Herd benutzen. Es ist besonders wichtig, daß die Herdtür richtig schließt und die folgenden Teile nicht beschädigt sind: (a) Tür (z.B. verbogen), (b) Scharniere und Klinken (z.B. gebrochen oder lose), (c) Türdichtungen und Dichtflächen.
(d) Das Gerät **NUR** von qualifiziertem Kundendienstpersonal reparieren lassen.

 ©2005 Maytag Services

VAROITUS MIKROAALTOSÄTEILYÄ

Käyttäjä ei saa joutua alttiiksi mikroaaltoenergialle, jota voi säteillä magnetronista tai muusta mikroaaltoja kehittävästä laitteesta, jos sitä käytetään väärin tai jos se kytketään väärin. Kaikkien mikroaaltoliitäntöjen sekä syöttöettä ulostulopuolella, aaltoputkien laippojen ja tiivisteiden tulee olla varmistettuja. Mikroaaltouunia ei saa koskaan käyttää ilman kuormaa, jossa mikroaaltoenergiaa kuluu. Avoimeen aaltoputkeen tai antenniin ei saa koskaan katsoa virran ollessa kytkettynä.

VARNING FÖR MIKROVÅGSSTRÅLNING

Mikrovågsenergi kan stråla från magnetronen eller från annan mikrovågsgenererande anordning om den används eller ansluts felaktigt. Alla anslutningar för mikrovåg, såsom flänsar och tätningar måste vara betryggande ur säkerhetssynpunkt. Starta aldrig anordningen utan mikrovågsabsorberande belastning. Mikrovågsstrålning från en öppen vågledare eller antenn har sådan strålningstäthet att uppenbar skaderisk föreligger.

ADVARSEL FOR MIKROBØLGESTRALING

Mikrobølgeenergi kan stråle fra magnetronen eller annen mikrobølgeproduserende anordning ved feilkopling eller feil bruk. Alle mikrobølgeinntak og -uttaksforbindelser, flenser og pakninger, må vaere sikkerhetsmessig betryggende utført. Anordningen må aldri startes uten mikrobølgeabsorberende belastning. Se aldri inn mot en åpen bølgeleder eller antenne mens apparatet er i drift.

FORSIGTIG MIKROBØLGESTRÅLING

Undgå at blive udsat for stråling fra mikrobølgegeneratoren eller andre dele som fører mikrobølgeenergi.

PRECAUZIONI PER EVITARE L'EVENTUALE ECCESSIVA ESPOSIZIONE ALLE MICROONDE

(a) **NON** cercare di far funzionare questo forno con lo sportello aperto: ciò può causare l'esposizione nociva alle microonde. È importante non danneggiare o manomettere i dispositivi di sicurezza.
(b) **NON** porre alcun oggetto fra il lato anteriore del forno e lo sportello o permettere il depositarsi di sporcizia o residui sulle superfici di tenuta.
(c) **NON** usare un forno danneggiato. È molto importante che lo sportello del forno si chiuda bene e che non vi siano danni a: (a) sportello (piegato); (b) cardini e dispositivi di chiusura (rotti o allentati); (c) guarnizioni dello sportello e delle superfici di tenuta.
(d) Il forno va regolato o riparato **ESCLUSIVAMENTE** da personale d'assistenza debitamente qualificato.

VOORZORGSMAATREGELEN TER VOORKOMING VAN MOGELIJKE BLOOTSTELLING AAN OVERMATIGE MICROGOLFENERGIE

(a) Probeer **NIET** om deze magnetron met de deur open te gebruiken. daar gebruik met open deur schadelijke blootstelling aan microgolfenergie ten gevolge kan hebben. Het is belangrijk dat u de veiligheidssluitingen nooit onklaar maakt of ermee knoeit.
(b) Plaats **GEEN** voorwerpen tussen de voorkant van de oven en de deur. Zorg dat geen vuil of schoonmaakmiddel op de sluitvlakken achterblijft.
(c) Gebruik de magnetron **NIET** indien hij beschadigd is. Het is vooral belangrijk dat de deur goed sluit en dat er geen beschadigingen zijn aan: (a) de deur (verbogen), (b) de scharnieren en sloten (gebroken of los), (c) de deurdafichtingen en sluitvlakken.
(d) De magnetron mag **UITSLUITEND** door daartoe bevoegd servicepersoneel bijgesteld en gerepareerd worden.

 ©2005 Maytag Services

Important Safety Information

⚠ CAUTION

Read the following information to avoid possible exposure to microwave radiation:

The basic design of the Amana and Menumaster microwave ovens make it an inherently safe device to both user and servicer. However, there are some precautions which should be followed when servicing the microwave oven to maintain this safety. These are as follows:

1. Always operate the unit from an adequately earthed outlet. Do not operate on a two-wire extension cord.
2. Before servicing the unit (if unit is operable), perform the microwave leakage test.
3. The oven should never be operated if the door does not fit properly against the seal, the hinges or hinge bearings are damaged or broken; the choke is damaged, (pieces missing, etc.); or any other visible damage can be noted. Check the choke area to ensure that this area is clean and free of all foreign matter.
4. If the oven operates with the door open and produces microwave energy, take the following steps.
   A. Tell the user not to operate the oven.
   B. Contact Maytag immediately.
5. Always have the oven disconnected when the outer case is removed except when making the "live" tests called for in this Service Manual. Do not reach into the equipment area while the unit is energized. Make all connections for the test and check them for tightness before plugging the cord into the outlet.
6. Always earth the capacitors on the magnetron filter box and H. V. Capacitor with an insulated-handle screwdriver before working in the high voltage area of the equipment compartment. Some types of failures will leave a charge in these capacitors and the discharge could cause a reflex action which could make you injure yourself.
7. In the area of the transformer, capacitor, diode, and magnetron there is HIGH VOLTAGE. When the unit is operating, keep this area clean and free of anything which could possibly cause an arc or earthing, etc.
8. Do not for any reason defeat the interlock switches. There is no valid reason for this action at any time; nor will it be condoned by Maytag.
9. IMPORTANT: Before returning a microwave to a customer, check for proper switch interlock action. The primary and secondary switches MUST actuate when the door is opened. The monitor switch MUST close at a $^{1}/_{64}$–inch (0.5 mm) when the door is opened.
10. Before returning a microwave to a customer, verify the door spacing is reasonably uniform along the top, bottom, and sides, and that it measures $^{1}/_{64}$–inch (0.5 mm) or less.
11. The Amana or Menumaster microwave oven should never be operated with:
    - Any components removed and/or bypassed.
    - Any of the safety interlocks found to be defective.
    - Any of the seal surfaces defective, missing, or damaged.
12. To ensure that the unit does not emit excessive microwave leakage and to meet the Department of Health Human Service guidelines, check the oven for microwave leakage using leakage monitor as outlined in the instructions. The maximum leakage level allowed is 4mW/cm^2.
13. If servicer encounters an emission reading over 4 mw/cm^2 the servicer is to cease repair and contact the Maytag Service Department immediately for further direction. Maytag will contact the proper Government Agency upon verification of the test results.

Important Safety Information

WARNING

Precautions to be observed before and during servicing to avoid possible exposure to excessive microwave energy, or electrical shock disconnect power to oven.

(A) Do not operate or allow oven to be operated with door open.

(B) Make the following safety checks on all ovens to be serviced before activating the magnetron or other microwave source, and make repairs as necessary:

- Interlock operation
- Proper door closing
- Seal and sealing surfaces (arcing, wear, and other damage)
- Damage to or loosening of hinges and latches
- Evidence of dropping or abuse

(C) Before turning on microwave power for any service test or inspection within the microwave generating compartments, check the magnetron, waveguide or transmission line, and cavity for proper alignment, integrity, and connections.

(D) Any failed or misadjusted components in the interlock, monitor, door seal, microwave generation, and transmission systems shall be repaired, replaced or adjusted by procedures described in this manual before oven is released to the consumer.

(E) Check microwave leakage to verify compliance with the federal performance standard should be performed on each oven prior to release to the consumer.

Wiring

Good service practice is to never route wiring over terminals and/or sharp edges. This applies to any wiring without regard to the circuit voltage. Wire insulation material and thickness is designed and regulated for electrical spacing purpose only, but cannot always be relied upon because of possible cuts and/or abrasions, which can occur during servicing.

WARNING

To avoid risk of electrical shock, personal injury or death, make sure these earthing instructions are followed.

Earthing Instructions

WARNING

Do not remove earthing prong when installing earthed appliance in a home or business that does not have three wire earthing receptacle, under no condition is earthing prong to be cut off or removed. It is the personal responsibility of the consumer to contact a qualified electrician and have properly earthed three prong wall receptacle installed in accordance with appropriate electrical codes

Should a two prong adapter plug be required temporarily, it is the personal responsibility of the consumer to have it replaced with properly earthed three prong receptacle or the two prong adapter properly earthed by a qualified electrician in accordance with appropriate electrical codes.

Servicing of Earthed Products

The standard accepted color coding for earthing wires is GREEN or GREEN WITH YELLOW STRIPE. These earth leads are NOT to be used as current carrying conductors. It is extremely important that the technician replace any and all earths prior to completion of the service call. Under no condition should earth wire be left off causing a potential hazard to technicians and consumer.

 ©2005 Maytag Services

General Information

Unpacking Oven

- Inspect oven for damage such as dents in door or inside oven cavity.
- Report any dents or breakage to source of purchase immediately.
- **Do not attempt to use oven if damaged.**
- Remove all materials from oven interior.
- If oven has been stored in extremely cold area, wait a few hours before connecting power.

Oven Placement

- Do not install oven next to or above source of heat, such as pizza oven or deep fat fryer. This could cause microwave oven to operate improperly and could shorten life of electrical parts.
- Do not block or obstruct oven filter. Allow access for cleaning.
- Install oven on level countertop surface.
- Place warning label in a conspicuous place close to microwave oven.
- Outlet should be located so that plug is accessible when oven is in place.

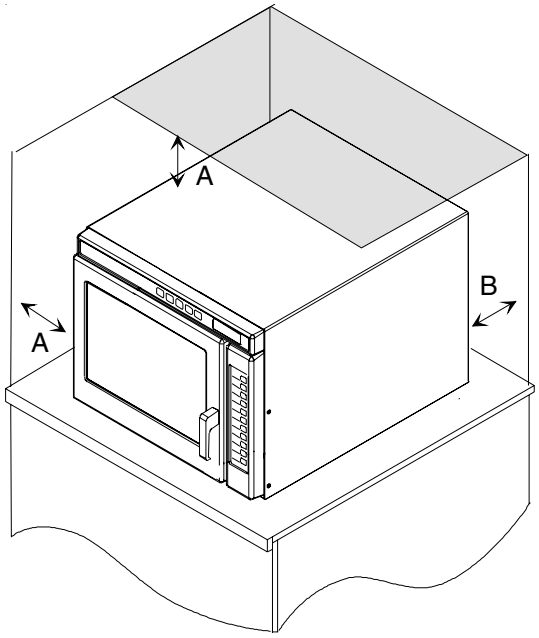

A—Allow at least 7 " (17.8 cm) of clearance around top and sides of oven. Proper air flow around oven cools electrical components. With restricted air flow, oven may not operate properly and life of electrical parts is reduced.

B—Allow at least 2 9/16 " (6.5 cm) between air discharge on back of oven and back wall.

Radio Interference

Microwave oven operation may cause interference to radio, television, or similar equipment. Reduce or eliminate interference by doing the following:

- Clean the door and sealing surfaces of microwave oven according to instructions in “Care and Cleaning” section.
- Place radio, television, etc. as far as possible from the microwave oven.
- Use a properly installed antenna on radio, television, etc. to obtain stronger signal reception.

Earthing Instructions

This appliance **MUST** be earthed. If an electrical short circuit occurs, earthing reduces the risk of electric shock by providing an escape wire for the electric current. The cord for this appliance has a earthing wire with a earthing plug. Place the plug into an outlet that is properly installed and earthed. Do not use a two–prong adapter.

⚠ WARNING

To avoid risk of electric shock, personal injury or death, do not alter the plug and use earthing plug properly.

Consult a qualified electrician if you do not understand the earthing instructions or if you wonder whether the appliance is properly earthed.

Keep the electrical power cord dry and do not pinch or crush it in anyway.

The wires in the power cord are colored in accordance with the following code:

- **Green/Yellow:** **Earth**
- **Blue:** **Neutral**
- **Brown:** **Live**

General Information

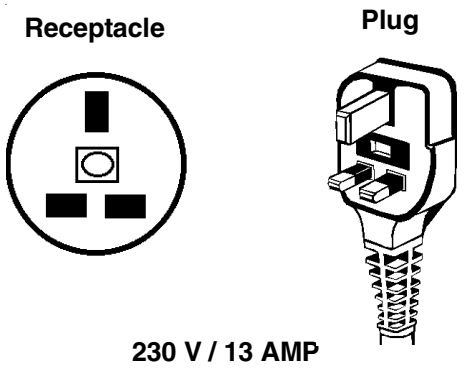

230 V / 13 AMP

Equipment requires a
230 VAC, 50 Hz, 13 amp power supply

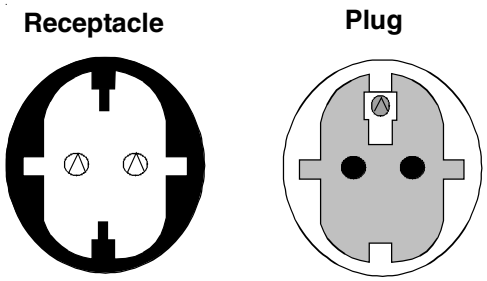

230 V / 16 AMP

Equipment requires a
230 VAC, 50 Hz, 16 amp power supply

Do not use a extension cord. If the product power cord is too short, have a qualified electrician install a three-prong receptacle. This unit should be plugged into a separate dedicated 230 VAC / 50 Hz power supply. If other equipment is on the same circuit, an increase in cooking times may be required and fuse can be blown.

Microwave Oven Description

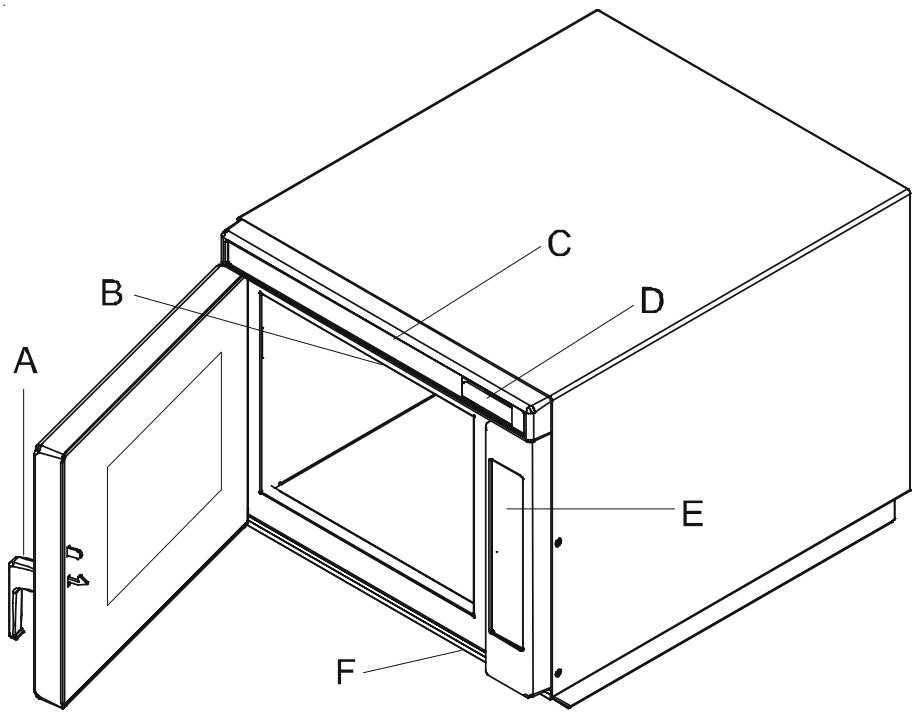

A—Door Handle
B—Spatter Shield
C—Top Control panel
D—Display
E—Side Control Panel
F—Air Filter

 ©2005 Maytag Services

Troubleshooting

Power Up

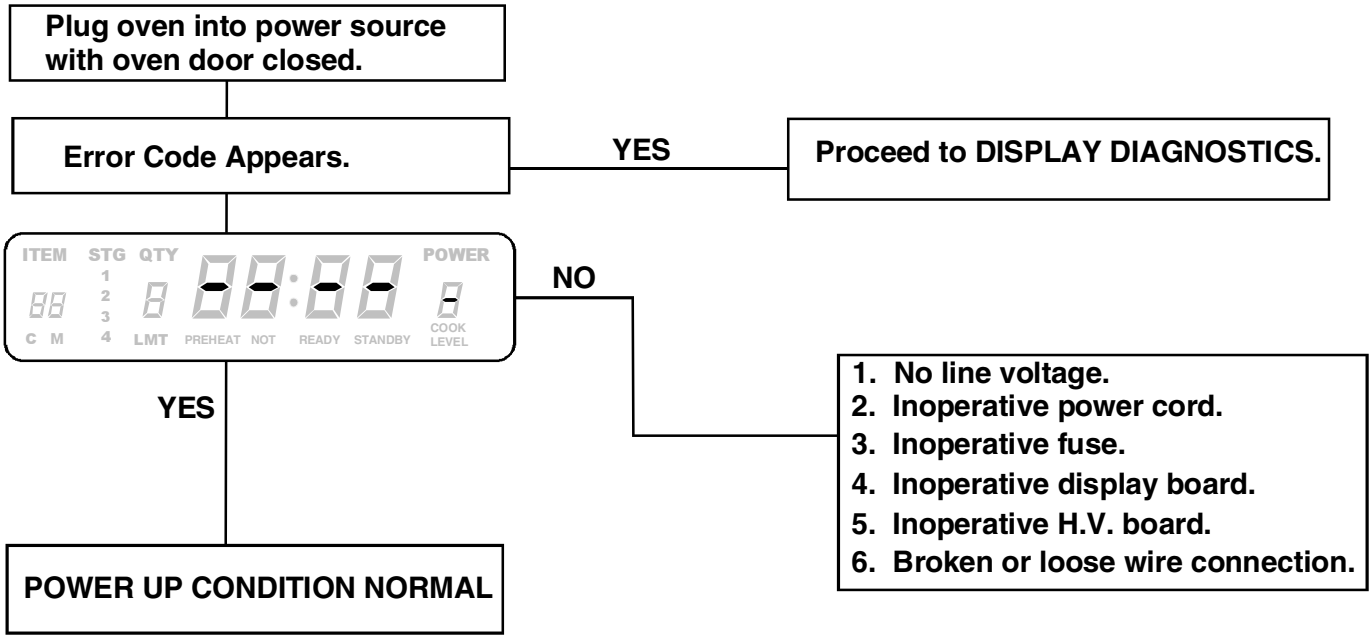

Troubleshooting

Standby Condition

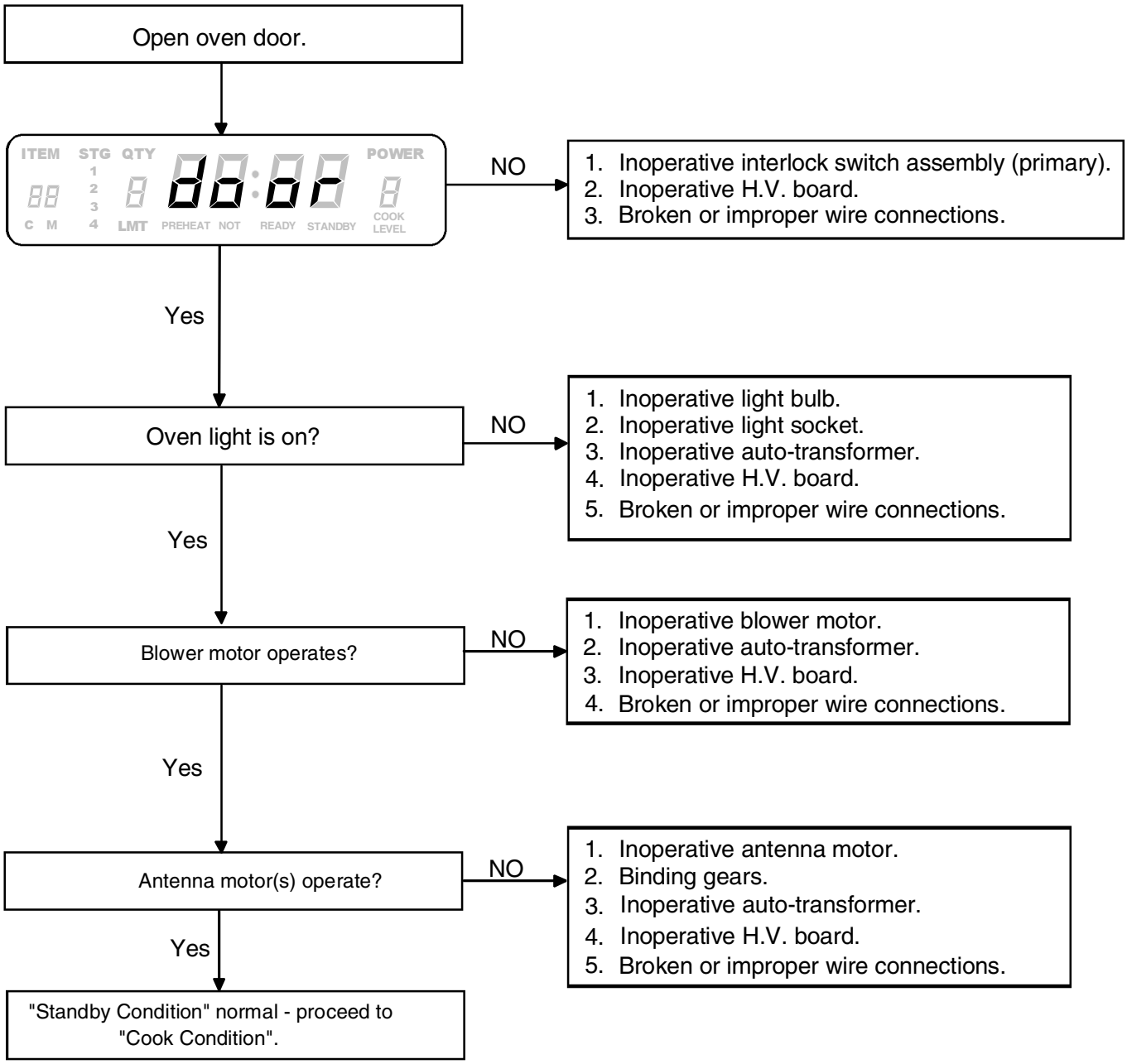

 ©2005 Maytag Services

Troubleshooting

Cook Condition

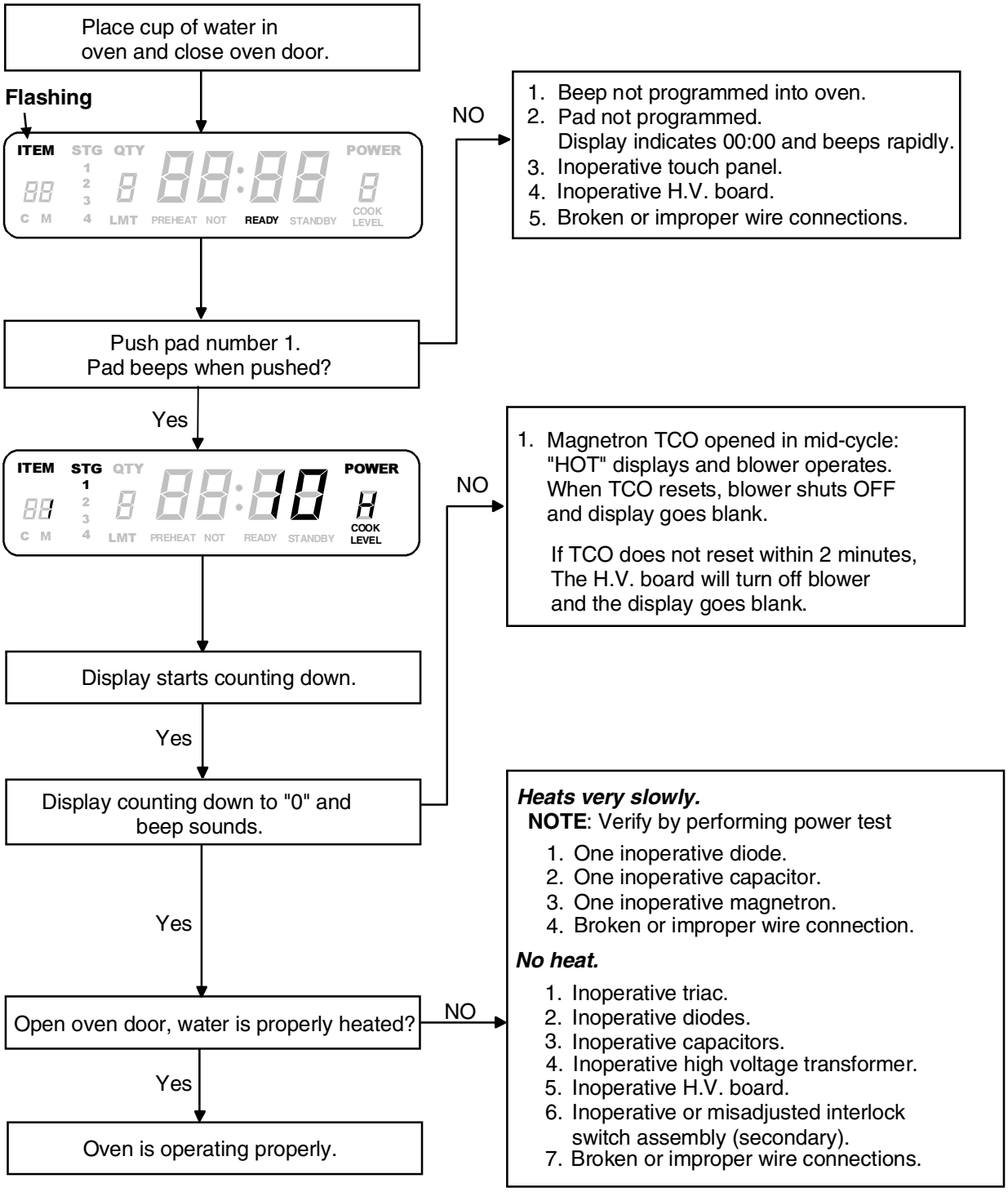

NOTE: Shut down after cook cycle - door closed - factory preset at 60 seconds, but can be changed with user options. Shut down, door open - approximately 2 minutes. Blower shuts down and display indicates **door**.

Component Testing Procedures

WARNING

To avoid risk of electrical shock, personal injury or death; disconnect power to oven and discharge capacitor before servicing, unless testing requires power.

Refer to Technical Sheets for specific model information.

Illustration	Component	Test	Results
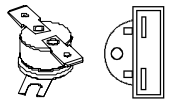	Thermal cutout	Disconnect all wires from TCO. Measure resistance across terminals. Magnetron TCO ..... Magnetron TCO ..... Magnetron TCO ..... Relay TCO ..... Cavity TCO ..... Cavity TCO ..... Cavity TCO	 Open at 149°C (300°F) and closes at 125°C (257°F) Open at 280°F (138°C) and closed at 180°F (82°C) Open at 300°F (149°C) and closed at 257°F (125°C) Open at 235°F (113°C) and closed at 150°F (66°C) Opens at 128°C (262°F) Opens at 219°F (104°C) Opens at 262°F (128°C)
	Diode	**Discharge Capacitor** Remove diode lead from capacitor and connect ohmmeter. Reverse leads for second test.	Infinite resistance should be measured in one direction and 50KΩ or more in the opposite direction. **NOTE:** Ohmmeter must contain a battery of 6 volts minimum.
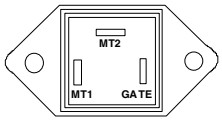 Triac 1 (center) Triac 2 (left) Triac 3 (right	Triac	**Resistance Check** Disconnect wires to triac. Measure resistance from: MT1 to MT2 ..... MT1 to Gate..... MT2 to Gate..... All terminals to ground ..... **Voltage Check** Measure voltage from: MT1 to Gate	**Caution - Do not operate oven with wire to terminal MT2 removed.** Infinite Approximately 60 Ω Infinite Infinite 0.8 VAC when energized. If no voltage, check H.V. board and wiring.
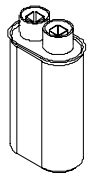	Capacitor Some units may use more then one type of capacitor. Refer to Parts Manual for correct capacitor quantity.	**Discharge Capacitor** Remove wires from capacitor terminals and connect ohmmeter, set on highest resistance scale to terminals. Also check between each terminal and capacitor case.	Between Terminals: Meter should momentarily deflect towards zero then return to over 5 MΩ. If no deflection occurs, or if continuous deflection occurs, replace capacitor. Terminal to Case: Infinite resistance
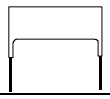	Snubber assembly	Disconnect wires to snubber. Measure resistance across terminals	 Infinite
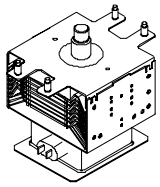	Magnetron	**Discharge Capacitor** Remove wires from magnetron and connect ohmmeter to terminals. Also check between each terminal and ground.	Between Terminals: Less than 1 Ω Each terminal to ground measures Infinite resistance. **Note:** This test is not conclusive. If oven does not heat and all other components test good replace the magnetron and retest.
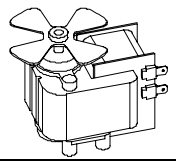	Blower motor	Remove all wires from motor. Measure resistance across coil	 Approximately 25 Ω

 ©2005 Maytag Services

Component Testing Procedures

WARNING

To avoid risk of electrical shock, personal injury or death; disconnect power to oven and discharge capacitor before servicing, unless testing requires power.

Refer to Technical Sheets for specific model information.

Illustration	Component	Test	Results
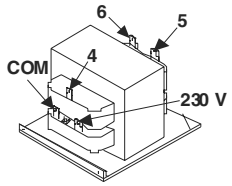	Transformer 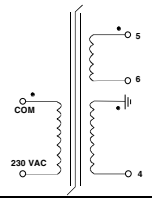	**Discharge Capacitor** Remove all wires from terminals. Measure resistance from: 230 to COM ..... 230 to Ground ..... Terminal 5 to 6 ..... Terminal 4 to Ground	 Less than 1 Ω Infinite Less than 1 Ω Approximately 65 Ω
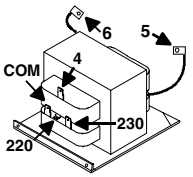	Transformer 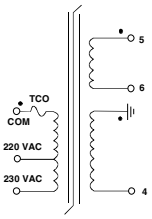	**Discharge Capacitor** Remove all wires from terminals. Measure resistance from: 230 to COM ..... 208 to COM ..... 230 to Ground ..... 208 to Ground ..... Terminal 5 to 6 ..... Terminal 4 to Ground	 Less than 1 Ω Less than 1 Ω Infinite Infinite Less than 1 Ω Approximately 70 Ω
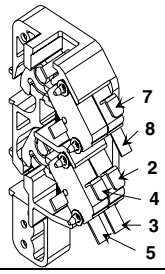	Interlock switch 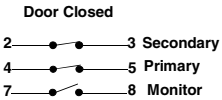	Disconnect wires to switch. With door open measure resistance from: Terminal 2 to 3 ..... Terminal 4 to 5 ..... Terminal 7 to 8 ..... With door closed measure resistance from: Terminal 2 to 3 ..... Terminal 4 to 5 ..... Terminal 7 to 8	 Infinite Infinite Indicates continuity Indicates continuity Indicates continuity Infinite
	Lamp receptacle (some models)	Test continuity of receptacle terminals.	Indicates continuity if bulb is good and screwed in.
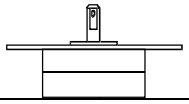	Antenna motor	Remove all wires from terminals. Measure resistance from: Terminal to terminal	 Approximately 12K Ω
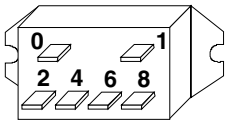	Relay This relay contains a diode in the coil circuit.	Measure resistance from: Terminal 0 to terminal 1 (coil) ..... 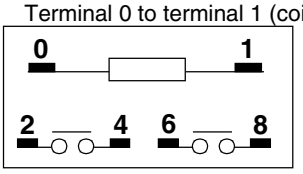	Approximately 6 to 7 MΩ **NOTE:** Analog meter is recommended for measurement. **NOTE:** If using a digital meter it must contain a battery of 6 volts minimum.
	Line filter	Disconnect wire from terminals. Measure resistance of the following terminals: White to Blue ..... Black to Brown	 < 1 Ω < 1 Ω
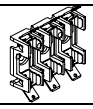	Terminal block	Visual check.	Verify fuse holding terminals are not damaged. Verify terminals are not damaged.
Refer to Parts Manual for proper power cord part number.	Power cord	Measure resistance of wires.	Continuity should be indicated on each wire. Verify polarity and grounding.

Component Testing Procedures

WARNING

To avoid risk of electrical shock, personal injury or death; disconnect power to oven and discharge capacitor before servicing, unless testing requires power.

Refer to Technical Sheets for specific model information.

Illustration	Component	Test	Results		
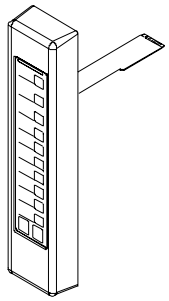	Side touch panel	Continuity is indicated as 100 Ω and below. 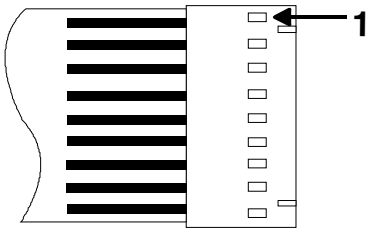	**Pad**	**Trace**	**Measurement**
			1	3 & 5	Continuity
			2	3 & 6	Continuity
			3	3 & 7	Continuity
			4	3 & 8	Continuity
			5	3 & 9	Continuity
			6	4 & 5	Continuity
			7	4 & 6	Continuity
			8	4 & 7	Continuity
			9	4 & 8	Continuity
			0	4 & 9	Continuity
			Start	5 & 6	Continuity
			Stop/Reset	6 & 9	Continuity
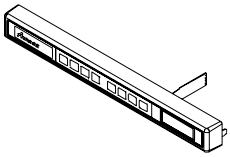	Top touch panel	Removal of touch panel is required to perform test. Continuity is indicated as 100 Ω and below. 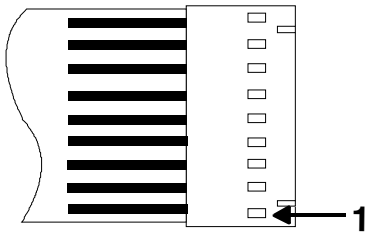	**Pad**	**Trace**	**Measurement**
			Time Entry	5 & 7	Continuity
			Power Level	5 & 8	Continuity
			Stage	5 & 9	Continuity
			Program Save	6 & 7	Continuity
			Quantity	6 & 8	Continuity
			Menu	7 & 9	Continuity
			Hidden Pad	8 & 9	Continuity

Display board

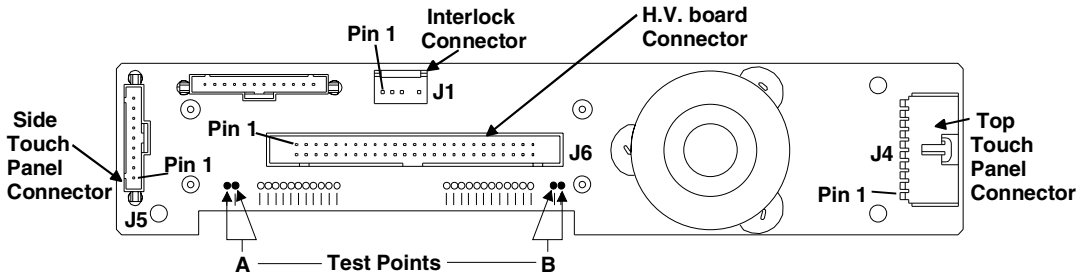

Function	Test Set-Up	Meter Setting	Probe Placement	Results
Input to Display Board	At Display Board	Volts	Test points A and B	3.0 VAC If voltage is present and no display is indicated, replace display board. If no voltage is present, check wire harness connections and H.V. board.

 ©2005 Maytag Services

Component Testing Procedures

WARNING

To avoid risk of electrical shock, personal injury or death; disconnect power to oven and discharge capacitor before servicing, unless testing requires power.

Refer to Technical Sheets for specific model information.

H.V. board

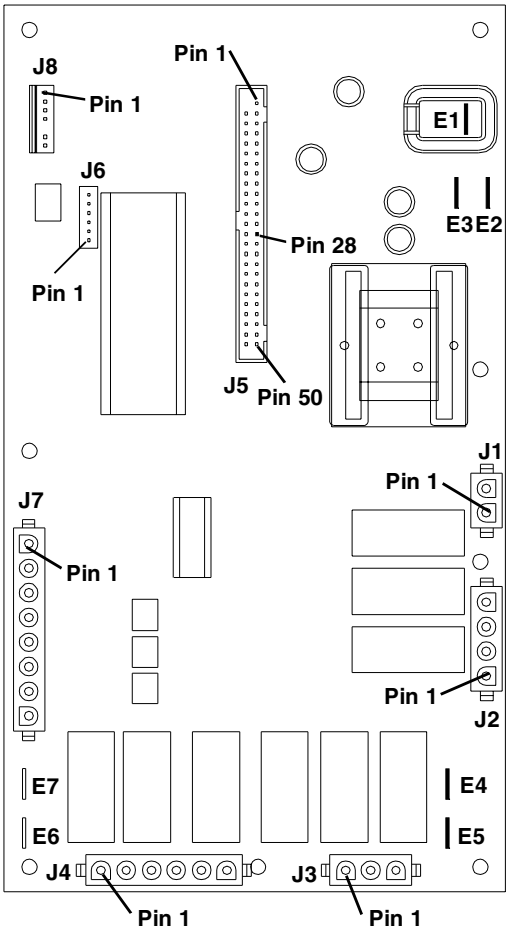

Function	Test Set-Up	Meter Setting	Probe Placement	Results
Input to H.V. board	At H.V. board	Volts	J1 pin 1 (Brown wire) & J1 pin 2 (White wire)	Line voltage
Output to display board	Disconnect J5 connector, blower runs continuously	Volts	J5 pin 28 & J5 pin 50	– 24 VDC

Component Testing Procedures

WARNING

To avoid risk of electrical shock, personal injury or death; disconnect power to oven and discharge capacitor before servicing, unless testing requires power.

Refer to Technical Sheets for specific model information.

NOTE: For the following test, place oven in Service Test Mode.

Relay	Function	Test Set-Up	Meter Setting	Probe Placement	Results
K1 at 230 VAC line voltage	Blower motor Antenna motor Cavity light	Disconnect J2 connector	Ohms	J1 pin 1 (Brown wire) & J2 pin 4	Test mode 5 off – no continuity Test mode 5 on – < 1 Ω

H.V. Board – Relay Test

Three Magnetron Models

Relay	Function	Test Set-Up	Meter Setting	Probe Placement	Results
K8	Magnetron **1** (Top rear) at 230 VAC	All wires connected to H.V. board	VAC	E2 (Black wire) & J4 pin 2 (Red wire)	Test mode 1 off – line voltage Test mode 1 on – 0 volts
K4	Magnetron **2** (Top front) at 230 VAC	All wires connected to H.V. board	VAC	E5 (Red wire) & J3 pin 1 (Gray wire)	Test mode 2 off – line voltage Test mode 2 on – 0 volts
K6	Magnetron **3** (Bottom) at 230 VAC	All wires connected to H.V. board	VAC	J4 pin 4 (Black wire) & J4 pin 6 (Black wire)	Test mode 3 off – line voltage Test mode 3 on – 0 volts

Two Magnetron Models

Relay	Function	Test Set-Up	Meter Setting	Probe Placement	Results
K8	Magnetron **1** (Top rear) at 230 VAC	All wires connected to H.V. board	VAC	E5 (Red wire) & J4 pin 2 (Red wire)	Test mode 1 off – line voltage Test mode 1 on – 0 volts
K6	Magnetron **3** (Bottom) at 230 VAC	All wires connected to H.V. board	VAC	J4 pin 4 (Black wire) & J4 pin 6 (Black wire)	Test mode 3 off – line voltage Test mode 3 on – 0 volts

©2005 Maytag Services

Component Testing Procedures

⚠ WARNING

To avoid risk of electrical shock, personal injury or death; disconnect power to oven and discharge capacitor before servicing, unless testing requires power.

Three Magnetron Models

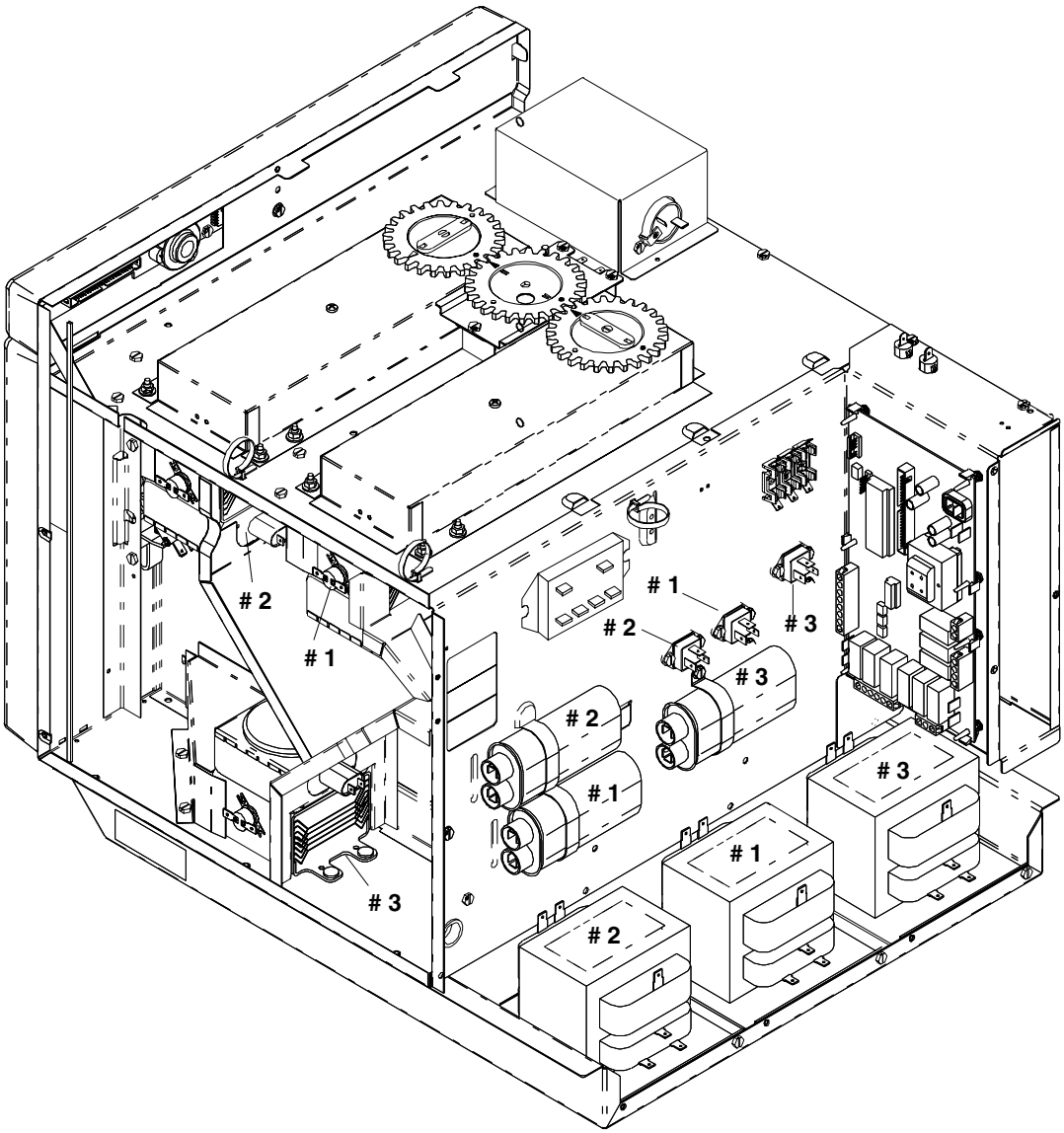

H.V. System # 1	H.V. System # 2	H.V. System # 3
Top Rear Magnetron Center Transformer Bottom Center Capacitor Diode Center Triac	Top Front Magnetron Left Transformer Top Left Capacitor Diode Left Triac	Bottom Magnetron Right Transformer Right Capacitor Diode Right Triac

Component Testing Procedures

WARNING

To avoid risk of electrical shock, personal injury or death; disconnect power to oven and discharge capacitor before servicing, unless testing requires power.

Two Magnetron Models

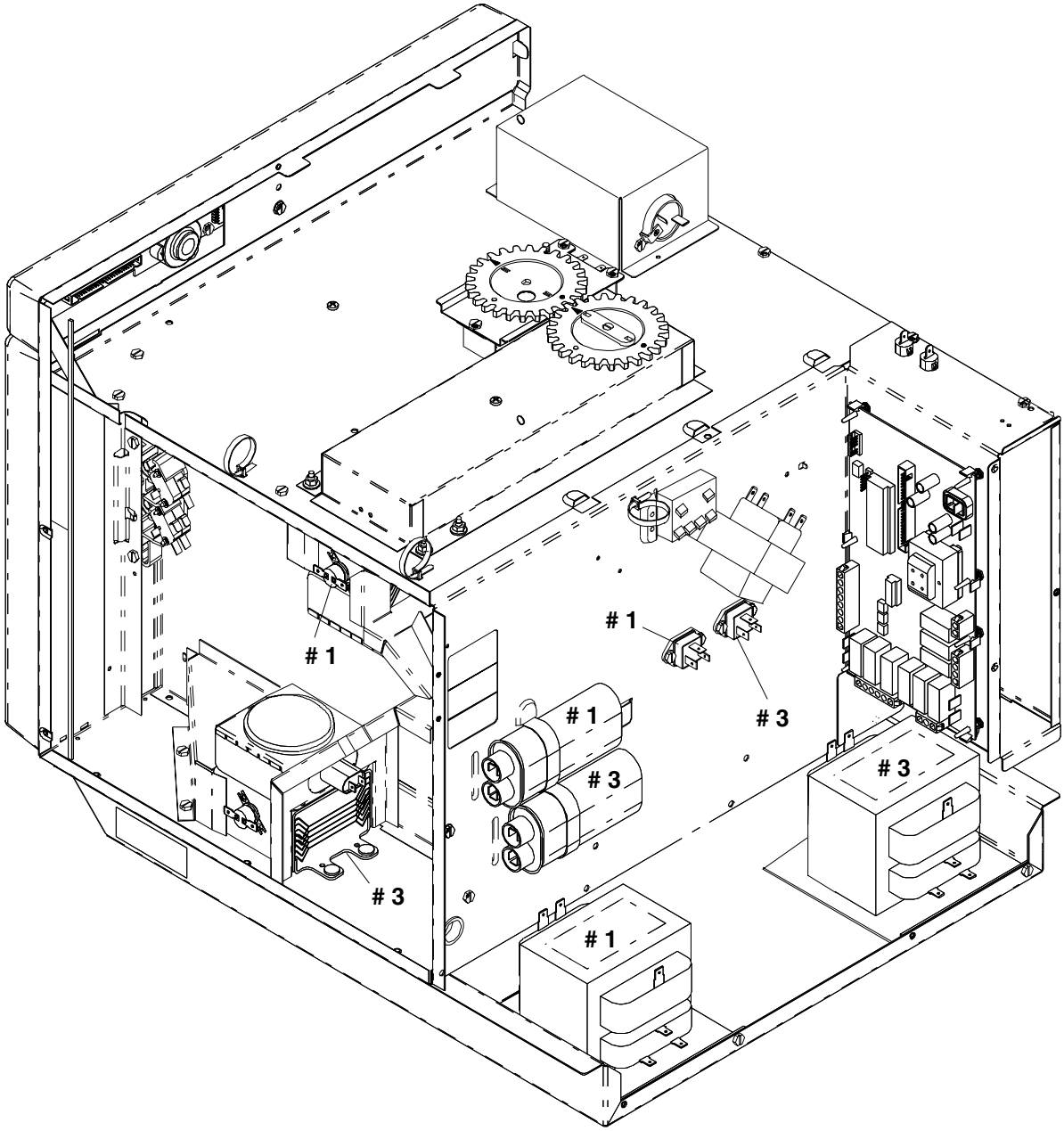

H.V. System # 1	H.V. System # 3
Top Rear Magnetron Left Transformer Top Capacitor Diode Left Triac	Bottom Magnetron Right Transformer Bottom Capacitor Diode Right Triac

 ©2005 Maytag Services

Power Testing Procedure

⚠ WARNING

To avoid risk of electrical shock, personal injury or death; disconnect power to oven and discharge capacitor before servicing, unless testing requires power.

All Amana and Menumaster microwave oven power outputs are rated using the IEC705 standards. Using the IEC705 test method requires precision measurements and equipment that is not practical to be performed in the field. Using the test shown below will indicate if the oven performance is satisfactory.

Test equipment required:

- 1000 ml test container and thermometer (Amana power test kit R0157397 Fahrenheit / Menumaster power test kit M95D5 Celsius).
- Digital watch / watch with a second hand for use on ovens with electromechanical timers.

Important Notes:

- Low line voltage will cause low temperature rise / power output.
- Ovens must be on a dedicated circuit, properly grounded, and polarized. Other equipment on the same circuit may cause a low temperature rise / power output.
- This test and results are not a true IEC705 test procedures and are only intended to provide servicers with an easy means of determining if the microwave oven cooking output is correct.

Procedure

1. Fill the test container to the 1000 ml line with cool tap water.

NOTE: Water temperature should be approximately 60°F / 16°C

2. Using the thermometer, stir water for five to ten seconds; measure, and record the temperature (T1).
3. Place test container of water in the center of oven cavity and close door.
4. Heat the water for a 33-second full power cycle.

NOTE: Use a digital watch or a watch with a second hand for ovens with electromechanical timers.

5. At end of the cycle, remove test container. Using the thermometer, stir water for five to ten seconds and record temperature (T2).
6. Subtract the starting water temperature (T1), from the ending water temperature (T2) to obtain the temperature rise (ΔT).
7. If the temperature rise (ΔT) meets or exceeds the minimum, the test is complete. If the temperature rise (ΔT) fails to meet the minimum temperature rise, test the line voltage to verify it is correct. Then repeat steps 1 - 6 making sure to change the water. If the temperature rise (ΔT) fails to meet the minimum temperature rise again the oven will require service.

Minimum Temperature Rise at Thirty -Three (33) Seconds Run Time

ΔT (°F)	Cooking Power Output	ΔT (°F)	Cooking Power Output	ΔT (°C)	Cooking Power Output	ΔT (°C)	Cooking Power Output
10	1000	20	2000	5	1000	11	2000
11	1100	21	2100	5.5	1100	11.5	2100
12	1200	22	2200	6.5	1200	12	2200
14	1400	24	2400	7.5	1400	13	2400
17	1700	25	2500	9.5	1700	13.5	2500
18	1800	27	2700	10	1800	15	2700
19	1900	30	3000	10.5	1900	16.5	3000

Display Diagnostics

WARNING

To avoid risk of electrical shock, personal injury or death; disconnect power to oven and discharge capacitor before servicing, unless testing requires power.

CAUTION

1. All repairs as described in this troubleshooting section are to be performed only after the caution procedures one through eight listed below have been followed.
2. Check grounding before checking for possible causes.
3. Be careful of the high voltage circuit.
4. Discharge high voltage capacitor.
5. When checking the continuity of the switches or the high voltage transformer, disconnect one lead wire from these parts and then check continuity with the AC plug removed. To do otherwise may result in a false reading or damage to your meter.
6. Do not touch any parts of the circuitry on the P.C. Board circuit since static electric discharge may damage this control panel. Always touch yourself to ground while working on this panel to discharge any static charge in your body.
7. 240/230 VAC is present in the high voltage circuit board, power relay and primary circuit of low voltage transformer.
8. When troubleshooting, be cautious of possible electrical hazard.
9. When testing convection operation, convection fan may start at any time or if oven is hot.

Error Codes

During operation, the display may show the following service codes:

NOTE: Before scheduling service for any error codes, instruct customer to unplug oven for 1 minute, reconnect power, and retest. If unit operates properly, no service call is required.

Display	Description	Corrective Action
Err1	Failed H.V. Board	Replace H.V. board.
Err2	Shorted Touch Panel Failed H.V. Board Shorted Display Board Shorted Cable HV to Display Board	Replace Touch Panel. Replace H.V. board. Replace Display Board. Replace Cable.
Err3	Failed H.V. Board	Replace H.V. board.
Err4	Failed H.V. Board	Replace H.V. board.
Err5	Shorted Touch Panel	**NOTE:** If Touch Panel is pressed for more than 30 seconds, this error code will appear. 1. Disconnect oven from power supply. 2. Disconnect side touch panel connector from display board (J5). 3. Reconnect oven to power supply. 4. If “Err5” reappears after 30 seconds, replace top touch panel. 5. If “Err5” does not reappear after 30 seconds, replace side touch panel.
Err6	Failed H.V. Board	Replace H.V. board.
HOT		• Open TCO (magnetron). • Blower motor inoperative. • Restricted air filter. • High ambient temperature. • Oven operated empty or with light loads. • Broken or loose wire. • H.V. board inoperative.
Door	Door Interlock Primary Switch	• Verify latch mechanism moves freely on door. • Verify J1 connector on display board is properly seated. • Test interlock switch assembly and perform door adjustment if necessary. • Replace interlock switch assembly.

©2005 Maytag Services

Service Test

NOTE: Unit must be in OFF condition or INITIAL power up mode.

To Enter Service Test Mode, oven door must be closed.

NOTE: Pads will not beep when accessing Service Test Mode.
To EXIT Service Test Mode press STOP/RESET pad.

MC units

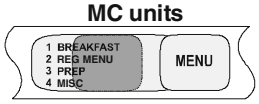

Hidden Pad

Press Hidden Pad as indicated above on touch panels.

Then **1** **3** **5** **7** **9**

Press → **Display** **Component Evaluation**

---

0 = Deactivated
1 = Activated

Indicates Service Mode

High Voltage System # 1

1 →

Toggles Magnetron 1 (Top Rear) ON/OFF.

Displays actual Amperage, will vary by model

Timer counts up to 62 seconds and unit shuts off.

If no Amperage, check for line voltage at H.V. transformer primary winding.
If no voltage, check:
- **Interlock switch (secondary)**
- **Triac 1**
- **H.V. board (relay K8 if 230 VAC, and triac 1 drive voltage T1 - G)**
- **Wiring**

If voltage is present, check:
- **H.V. components and wiring.**

High Voltage System # 2

2 →

Toggles Magnetron 2 (Top Front) ON/OFF.

Displays actual Amperage, will vary by model

Timer counts up to 62 seconds and unit shuts off.

If no Amperage, check for line voltage at H.V. transformer primary winding.
If no voltage, check:
- **Interlock switch (secondary)**
- **Triac 2**
- **H.V. board (relay K4 if 230 VAC, and triac 2 drive voltage T1 - G)**
- **Wiring**

If voltage is present, check:
- **H.V. components and wiring.**

High Voltage System # 3

3 →

Toggles Magnetron 3 (Bottom) ON/OFF.

Displays actual Amperage, will vary by model

Timer counts up to 62 seconds and unit shuts off.

If no Amperage, check for line voltage at H.V. transformer primary winding.
If no voltage, check:
- **Interlock switch (secondary)**
- **Triac 3**
- **H.V. board (relay K6 if 230 VAC, and triac 3 drive voltage T1 - G)**
- **Wiring**

If voltage is present, check:
- **H.V. components and wiring.**

Service Test

Press →	Display	Component Evaluation
4 → NOT ACTIVE	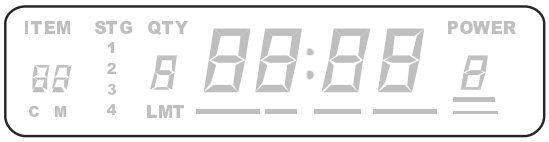	• This mode is NOT active with these models.
5 → Toggles Blower Motor Antenna Motor(s) Cavity Light (if applicable) ON/OFF.		If no fan operation, check: • Blower motor and wheel • Antenna motor • Cavity light (if applicable) • H.V. board relay K1 - 230 V • Wiring
6 → NOT ACTIVE		• This mode is NOT active with these models.
7 → Displays # of Magnetron Hours.	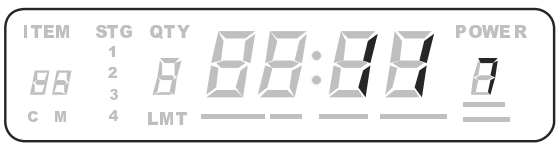	
8 → Displays # of Door Cycles with a 1 to 1 ratio rounded to the nearest ten		
9 → Clears Hours and Cycles (press START to activate) (Resets to 0).		
0 → Pressing 0 will clear CALL SERVICE display.	 	• CALL is displayed for 1 second SErv is displayed for 1 second. Then the display will be OFF for 5 seconds. • This will continue until Call Service is cleared from the display.

©2005 Maytag Services

Service Information

WARNING

To avoid risk of electrical shock, personal injury, or death, disconnect power to oven and discharge capacitor before servicing, unless testing requires power.

Proper Handling of Magnetron Tubes

CAUTION

A magnetron tube, like a radio or television tube must be handled with a reasonable amount of care. When handling a tube, always handle by the housing only. Use caution not to touch or strike the ceramic portion at the top. The carton used to ship service replacement tubes is reusable.

Magnetron Failure Modes

Magnetron failures that have been identified are generally grouped into categories shown below.

1. **Shorted**

Air - This is a case where the tube has had the vacuum envelope destroyed and air has entered the tube. This will cause internal arcing and high secondary current if high voltage is applied.

R.F. Capacitors - May short to chassis. This condition will also cause loss of high voltage.

2. **Open Heater (Filament)** - Can be determined by a ohmmeter when transformer leads are disconnected. Resistance is normally less than one ohm; filament does not short internally. Any tube removed should be checked since usage tends to make the filament more fragile. Later handling and shipping may open the filament and thereby mask the true failure mode when checked at the factory.
3. **Low Power** - Caused by “wearout” of the emission characteristics of the directly heated cathode. Symptoms are: (1) tube current will take longer to get to operating point then a new tube (normally about 2 - 3 seconds), (2) tube current does not get high enough to cause the tube to oscillate with normal line voltage, (3) oven produces low power into a load, two-thirds or less than normal.
4. **Physical Damage** - Caused by mishandling of magnetron tube.

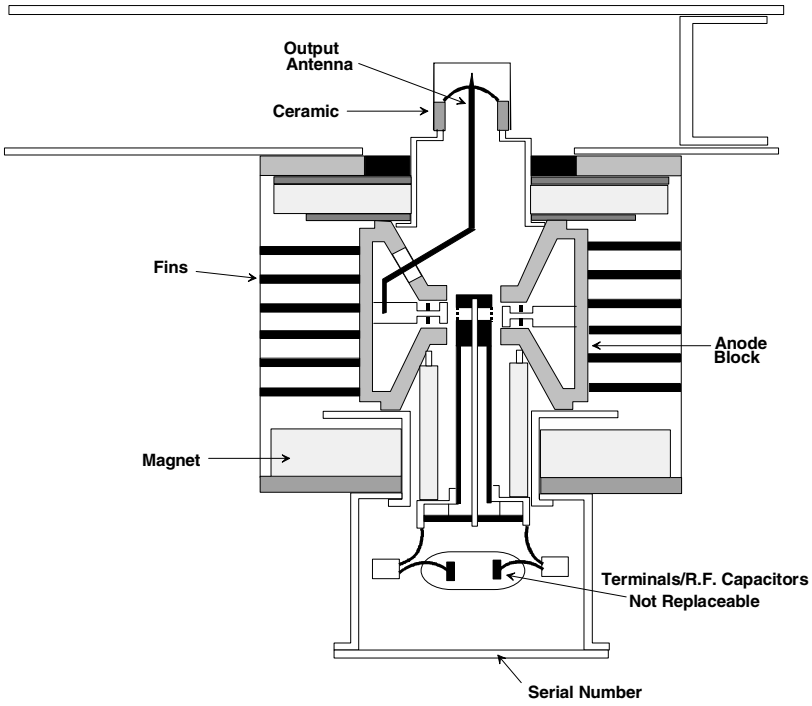

Service Information

WARNING

To avoid risk of electrical shock, personal injury, or death, disconnect power to oven and discharge capacitor before servicing, unless testing requires it.

Operating Instructions for the Holaday HI1501, HI1510, HI1710, and HI1801

Purpose of these monitors is to check radiation leakage around microwave oven door or other places where radiation could possibly occur.

Instrument measures radiation leakage in milliwatts per square centimeters (mW/cm^2). Probe should be used with the 2" (5 cm) cone spacer. Water load of 275 cc. (approximately 1 $^1/_3$ cup), is to be placed in the oven and used as a load during leakage tests.

Operate the instrument on its internal 9 Volt battery power supply. “Range” switch is used on low and high while using test probe. On an oven with an unknown leakage, use high scale then switch to low scale and test for low leakage. “Bat Test” switch is used to check the battery and probe on the Holaday Instruments. If either is faulty, meter needle will not read above “Test Minimum” or battery mark on meter. Holaday Instrument has a probe test switch position. Meter needle must indicate in the “OK probe test” portion of the scale when in this position. Zero control is used to zero the needle. “ON-OFF” switch provides a means of turning the operating voltage on or off. “Range Multiplier” switch provides a means of selection either 0-2 or 0-10 and 0-100 on the Holaday Instruments sensitivity ranges.

Test probe must be held by the grip portion of the handle, otherwise a false reading may result if operators hand is between the handle and probe.

If oven is likely to have a large amount of leakage, approach oven slowly with the probe, while observing meter. This is achieved by holding the probe two or three feet from oven surface or gap between door and oven body while observing meter. When high leakage is expected, do not move probe horizontally along the oven surface. This could cause possible probe burn-out. Greatest leakage is generally found at the corners. After maximum leakage is established to be within the meter scale range, then the probe may be moved horizontally around the door surface.

Hold probe perpendicular to cabinet door. Place cone of probe on the door and/or cabinet door seam and move along the seam. If leakage of the oven is unknown, move probe slowly. Proceed with care in order not to exceed a full scale reading of meter. When testing near a corner or access area of door, keep probe perpendicular to the areas making sure probe end at the base of the cone does not get closer than 2” (5cm) to any metal. If it does, an erroneous reading may result.

Always use the 2” (5cm) spacer with probe. Also, always proceed carefully in areas of high leakage or probe can be accidentally burned-out. Rotating antenna causes high peaks of energy. Although meter has averaging capabilities, probe will react instantaneously to peak power changes which will cause burn-out.

©2005 Maytag Services

Microwave Leakage Testing

WARNING

To avoid risk of electrical shock, personal injury, or death, disconnect power to oven and discharge capacitor before servicing, unless testing requires power.

WARNING

Check for radiation leakage after servicing. Should the leakage be more than 4 mW/cm^2 inform Maytag immediately. After repairing or replacing any radiation safety device, keep a written record for future reference, as required by D.H.H.S. and HEW regulations. This requirement must be strictly observed. In addition, the leakage reading must be recorded on the service repair ticket while in the customer's home.

Equipment

- Electromagnetic radiation monitor
- 600 cc glass beaker or plastic power bowl

Procedure for Measuring Radiation Leakage

Note before measuring:

- Do not exceed meter full scale deflection. Leak monitor should initially be set to the highest scale.
- To prevent false readings the test probe should be held by the grip portion of the handle only.
- The scan speed is equal to one inch per antenna revolution or one inch per second if antenna speed is unknown.
- Areas to be checked are all door seal areas and any venting parts.
- Leakage with the outer panel removed ...4mW/cm^2 or less.
- Leakage for fully assembled oven with door normally closed ...4 mW/cm^2 or less.
- Leakage for a fully assembled oven (before the latch switch (primary) is interrupted) while pulling the door
  ... 4 mW/cm^2 or less.

1. Pour 275 cc ±15 cc (9 oz ±1/2 oz) of 20°C ± 5°C (68°F ± 9°F) water in a beaker which is graduated to 600 cc and place the beaker in the center of oven.
2. Set the radiation monitor to 2450 MHz and use it following the manufacturer's recommended test procedure to assure correct results.
3. While measuring the leakage, always use the two inch (5 cm) spacer supplied with the probe.
4. Press the start pad or turn on the timer and with the magnetron oscillating, measure the leakage by holding the probe perpendicular to the surface being measured.

Measurement with the Outer Panel Removed

WARNING

Avoid contacting any high voltage components.

Whenever you replace the magnetron, measure for radiation leakage before the outer panel is installed and after all necessary components are replaced or adjusted. Special care should be taken in measuring around the magnetron.

Measurement with a Fully Assembled Oven

After all components including the outer panel are fully assembled, measure for radiation leakage around the door periphery, the door viewing window, the exhaust opening, and air inlet openings.

Record Keeping and Notification After Measurement

1. After any adjustment or repair to a microwave oven, a leakage reading must be taken. Record this leakage reading on the repair ticket even if it is zero.
2. A copy of the repair ticket and the microwave leakage reading should be kept by the repair facility.

Disassembly

WARNING

To avoid the risk of electrical shock, personal injury or death; disconnect power to oven and discharge capacitors before following any disassembly procedure.

Door Handle

Remove door handle by removing plactic plugs to gain access to set screws. Loosen set screws (3/32 inch allen screws), one located to the left of the door handle and one located on the bottom of the door handle.

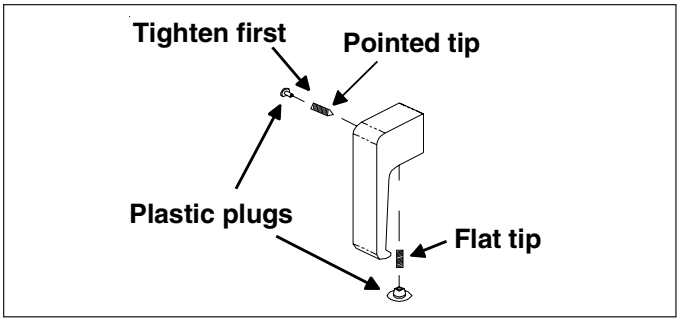

NOTE: When replacing door handle, tighten side set screw first and apply Loctite®.

NOTE: If set screws are removed, the set screw with the flat end must be used in the bottom of the door handle.

Door

1. Remove latch handle.
2. Remove outer door ring assembly from inner door ring by removing 10 y-drive screws.

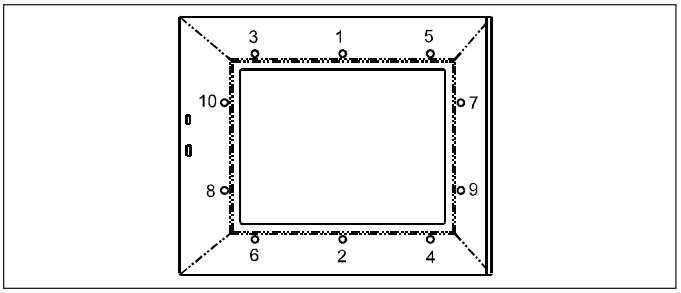

NOTE: When reinstalling outer door, tighten screws in pattern as shown above.

Outer Door

The outer door assembly consists of the outer door, outer window, and lens retainer. These components are available only as a complete assembly.

Inner Door Ring Assembly

1. Remove latch handle.
2. Remove outer door assembly.
3. Remove 5 hinge screws securing inner door ring assembly.

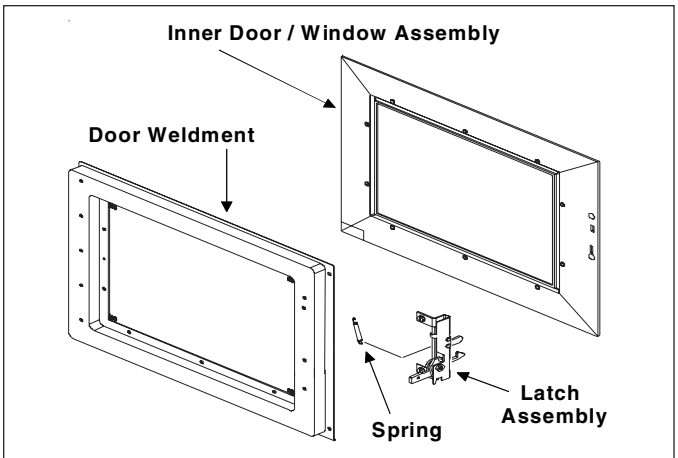

Inner Door Ring Assembly

The door ring assembly consists of the inner door ring, the inner door panel, and latch assembly. These components are available only as a complete assembly.

Hinge

1. Remove outer case.
2. Remove door latch handle.
3. Remove outer door assembly.
4. Remove nine hinge mounting screws from hinge (5 on the front, 4 on the side).

NOTE: Reinstall foam gasket on side of hinge when reinstalling.

5. When reinstalling hinge mounting screws, keep the side screws loose and the front screws tight, close door, press door against oven on the hinge side and tighten side hinge mounting screws in the sequence shown below.

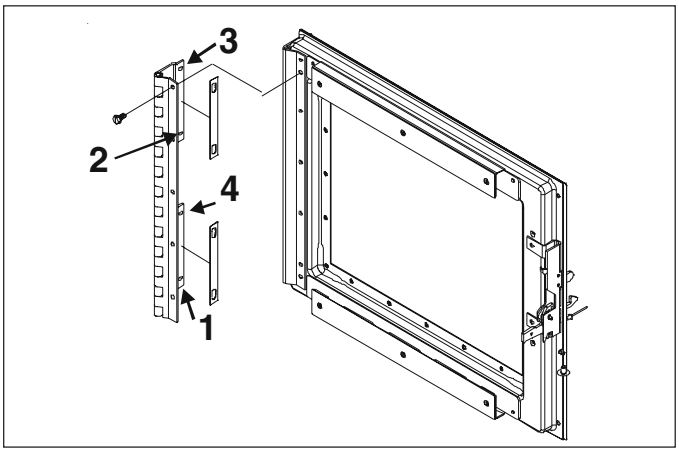

 ©2005 Maytag Services

Disassembly

WARNING

To avoid the risk of electrical shock, personal injury or death; disconnect power to oven and discharge capacitors before following any disassembly procedure.

Outer Case

1. Remove screws securing outer case to chassis, see illustration below.
2. Slide outer case back and lift off.
3. Reassemble outer case in reverse order.

Back Panel

1. Remove outer case.
2. Remove screws securing back panel.
3. Reassemble back panel in reverse order.

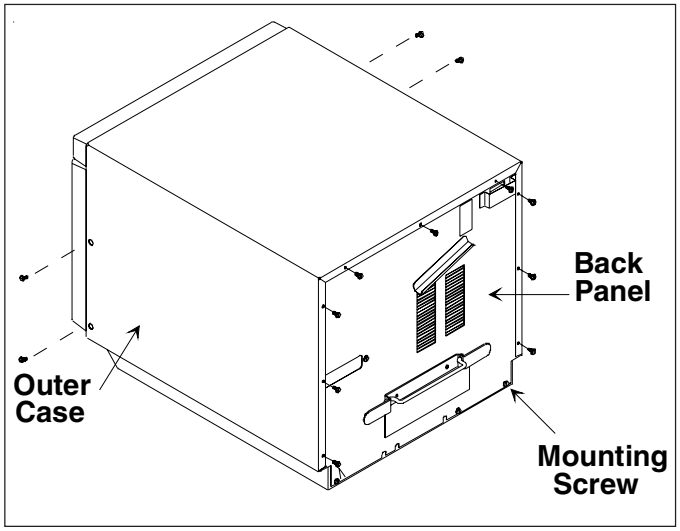

Splatter Shield

1. See “Component Location” Figure 2, for location.
2. Place fingers on front of shield, push forward, and down.
   - When removing and replacing splatter shield, be careful not to bend antenna.

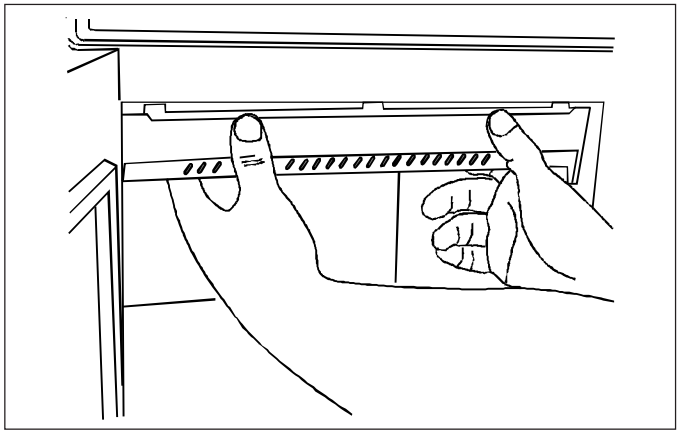

3. Reinstall splatter shield by fitting tabs into slots at top of oven cavity back. Lift and press front of shield until shield snaps into place.

Top Touch Panel Assembly

1. See “Component Location” Figure 1, for location.
2. Remove outer case.
3. Disconnect wire connectors at display board.
4. Remove screws securing top touch panel to unit.
5. Remove screws securing display board to top touch panel assembly.
6. Disconnect touch panel connector from display board.
7. Reassemble touch panel in reverse order.

Side Touch Panel Assembly

1. See “Component Location” Figure 1, for location.
2. Remove outer case.
3. Disconnect ribbon cable from display board.
4. Remove mounting screws securing side touch panel to unit.
5. Reassemble touch panel in reverse order.

High Voltage Circuit Board

1. See “Component Location“ Figure 3, for location.
2. Remove outer case.
3. Unplug connectors.
4. Disconnect wires from terminal locations on H.V. board.
5. Release mounting clips and remove board from plastic supports.
6. Reassemble high voltage board in reverse order.

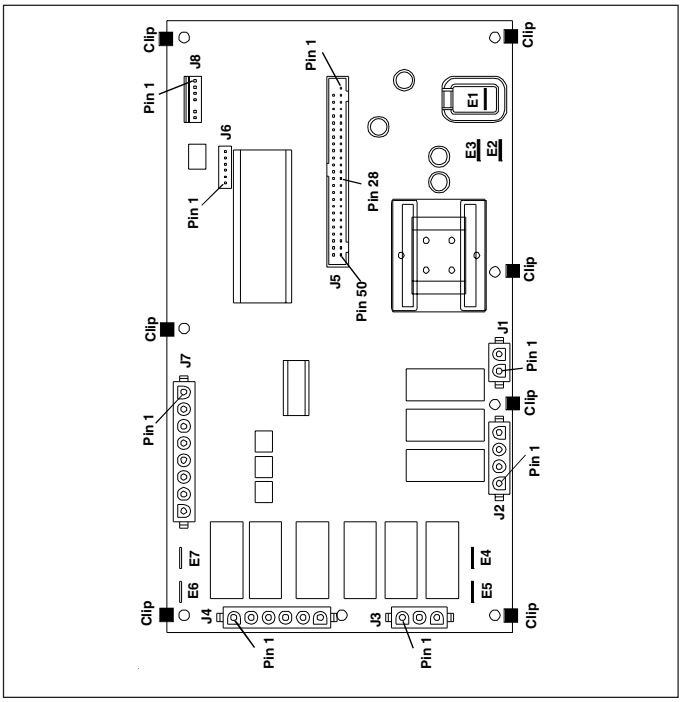

NOTE: When reassembling, verify cable connection with illustration of cable locations.

Disassembly

WARNING

To avoid the risk of electrical shock, personal injury or death; disconnect power to oven and discharge capacitors before following any disassembly procedure.

Interlock Switch Module

1. See “Component Location” Figure 1, for location.
2. Remove outer case.
3. Disconnect wiring from interlock switch assembly.
4. Remove mounting screws securing interlock switch.
5. When replacing assembly, all wires must be connected before operating oven.

NOTE: When the line fuse is blown **interlock switch module** must be replaced.

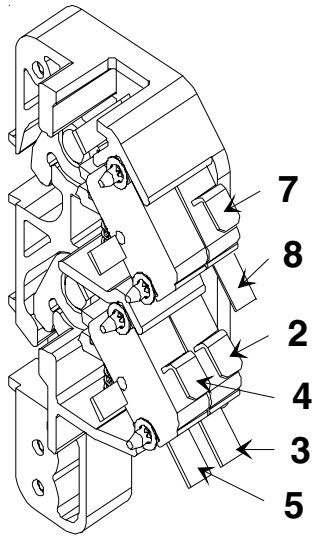

Adjustment

1. To adjust interlock switch assembly, close door.
2. Loosen bottom and top screw on the interlock switch assembly, allowing switch assembly to move in or out.
3. With door closed, push forward on interlock assembly to engage door latch. Then pull back on interlock assembly until door is "snug" against front oven cavity and tighten bottom screw first, then top screw.
4. Door will remain latched when proper adjustment is made.

NOTE: If door is not properly adjusted display will indicate ***door*** when the door is closed.

Display Module

1. See “Component Location” Figure 1, for location.
2. Remove outer case.
3. Remove top touch panel, see “Top Touch Panel” Assembly procedure.
4. Remove screws securing display module to top touch panel.
5. Reassemble display module in reverse order.

Top Rear Magnetron

1. See “Component Location” Figure 2, for location.
2. Remove outer case and back panel.
3. Remove wires from TCO and magnetron.
4. Remove screws securing top rear exhaust duct to cavity top. Do not attempt to remove exhaust duct at this time.
5. Remove magnetron mounting nuts.
6. Remove magnetron and exhaust duct.
7. Remove allen screws securing magnetron thermal cutout bracket to magnetron.
8. When replacing magnetron, verify wire mesh gasket is reinstalled properly.

NOTE: Slide exhaust duct on magnetron before reinstalling magnetron.

Top Front Magnetron

1. See “Component Location” Figure 2, for location.
2. Remove outer case and back panel.
3. Remove wires from TCO and magnetron.
4. Release center flow divider tabs from bottom flow divider and tilt center divider upward.
5. Remove screws securing top front exhaust duct to cavity top. Do not attempt to remove exhaust duct at this time.
6. Remove magnetron mounting nuts.
7. Remove magnetron, exhaust duct, and center flow divider.
8. Remove allen screws securing magnetron thermal cutout bracket to magnetron.
9. When replacing magnetron, verify wire mesh gasket is reinstalled properly.

NOTE: Slide exhaust duct and center flow divider on magnetron before reinstalling magnetron.

Bottom Magnetron

1. See “Component Location” Figure 2, for location.
2. Remove outer case and back panel.
3. Remove wires from TCO and magnetron.
4. Remove screws securing bottom exhaust duct to cavity bottom.
5. Lay oven on it’s left side.
6. Remove bottom access panel.
7. Remove magnetron mounting nuts.
8. Remove magnetron and exhaust duct.
9. When replacing magnetron, verify wire mesh gasket is reinstalled properly.

NOTE: Slide exhaust duct on magnetron before reinstalling magnetron.

 ©2005 Maytag Services

Disassembly

WARNING

To avoid the risk of electrical shock, personal injury or death; disconnect power to oven and discharge capacitors before following any disassembly procedure.

Magnetron Cutout (TCO)

1. See “Component Location” Figure 2, for location.
2. Remove outer case.
3. Remove wiring from selected thermal cutout.
4. Remove screws securing thermal cutout.
5. Reassemble thermal cutout in reverse order.

Cavity Thermal Cutout (TCO)

1. Remove outer case.
2. Remove left side air exhaust panel.
3. Remove wires from TCO.
4. Remove TCO.
5. Reassemble thermal cutout in reverse order.

Triacs

1. See “Component Location” Figure 3, for location.
2. Remove outer case and back panel.
3. Remove wires from terminals of selected triac.
4. Remove screws securing triac to chassis.
5. Reassemble triac in reverse order.

Capacitor

1. See “Component Location” Figure 3, for location.
2. Remove outer case and back panel.
3. Discharge capacitor and remove wires from terminals.
4. Remove capacitor bracket mounting screw.
5. Reassemble capacitor in reverse order.

NOTE: Capacitor bracket must be installed into indented slot located on cavity wall.

Transformer

1. See “Component Location” Figure 3, for location.
2. Remove outer case and back panel.
3. Remove screws securing transformer to chassis.
4. Pry upward and back to release transformer from chassis.
5. Remove wire connections from transformer.

NOTE: When placing transformer back into chassis. Front portion of transformer **must** slide into base pan tabs.

6. Reassemble transformer in reverse order.

Auto Transformer

1. See “Component Location” Figure 2, for location.
2. Remove outer case and back panel.
3. Remove screw securing auto transformer mounting bracket.
4. Reassemble auto transformer in reverse order.

Microwave Blower Wheel and Motor

1. Remove outer case and back panel.
2. Remove wiring from blower motor terminals.
3. Remove screws securing blower assembly to bracket.
4. Remove assembly from oven.
5. Loosen allen set screw securing blower wheel to motor shaft.
6. Remove blower wheel.
7. Remove screws securing motor to scroll.
8. Reassemble blower wheel and motor in reverse order.

NOTE: When reinstalling blower wheel, push blower wheel on shaft, tighten, and rotate to insure clearance between blower wheel, and blower housing.

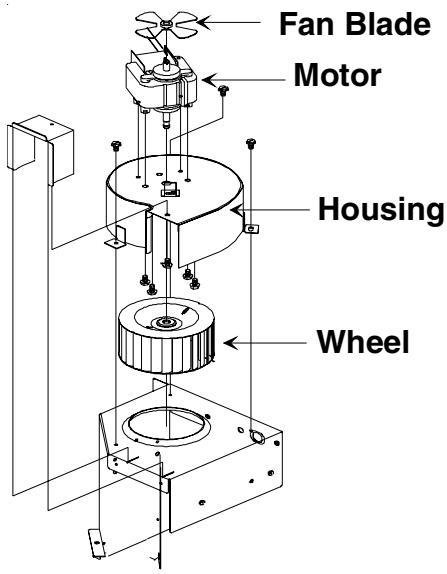

Blower Assembly

Fan Blade

1. Pull blade off shaft.
2. When reinstalling blade, push blade on shaft and rotate to insure clearance between fan blade and motor mounting bolt.

Disassembly

WARNING

To avoid the risk of electrical shock, personal injury or death; disconnect power to oven and discharge capacitors before following any disassembly procedure.

Top Antennas

1. See “Component Location” Figure 1, for location.
2. Remove outer case and grease shield.
3. Remove gear retainer from plastic gear.
4. While supporting antenna, carefully pry gear from antenna shaft.
5. Remove nylon washer from antenna shaft.
6. Remove antenna from oven cavity.

NOTE: Important items when re-installing antenna:

- Place nylon washer between gear and cavity.
- On 3-tube ovens, top gears must be aligned as shown below.

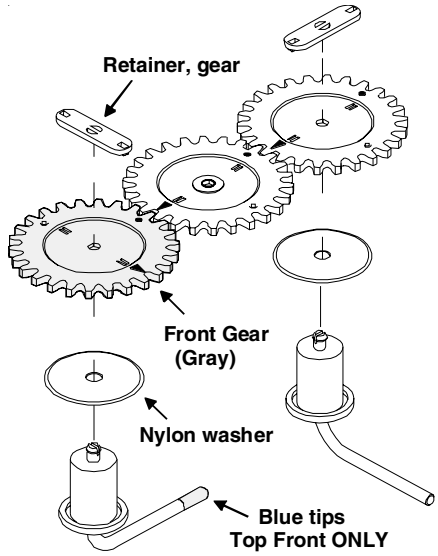

Three Tube Ovens

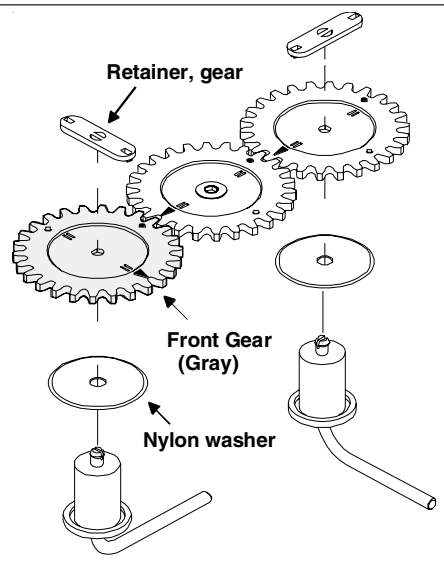

Two Tube Ovens

Bottom Antenna

1. Remove oven tray, see “Oven Tray Removal” procedure.
2. Lay oven on it’s left side and open oven door.
3. Remove bottom access cover.
4. Remove gear retainer from plastic gear.
5. While supporting antenna, carefully pry gear from antenna shaft.
6. Remove nylon washer from antenna shaft.
7. Remove antenna from oven cavity.

NOTE: Important items when re-installing antenna:

- Place nylon washer between gear and cavity.

Antenna Motors

1. Remove outer case from oven.
2. Remove wires connected to antenna motor.
3. Remove screws securing motor assembly to cavity.
4. Remove motor from unit.
5. Reassemble in reverse order.

NOTE: On 3-tube models, top antenna gears must be aligned as illustrated in “Top Antennas” procedure.

Oven Tray Removal / Installation

1. Using a utility knife, cut RTV seal around perimeter of tray.
2. Using a heat gun, apply heat to front lip of tray to release hot melt glue.
3. Pry upward on front lip of tray to remove.
4. Thoroughly remove all traces of old RTV and degrease the tray, cavity bottom, walls, and front flange.
5. Place tray in center of cavity. Do not allow tray to touch side walls.
6. Apply a generous bead of RTV sealent around perimeter of tray.
7. Apply a light water spray to the fresh RTV sealant.
8. Using RTV scrapper, Amana part # R0000039, remove excess RTV.

NOTE: Allow RTV to set for 1 hour before using.

 ©2005 Maytag Services

Disassembly

WARNING

To avoid the risk of electrical shock, personal injury or death; disconnect power to oven and discharge capacitors before following any disassembly procedure.

Fuse

1. See “Component Location” Figure 3, for location.
2. Remove outer case.
3. Replace fuse and reassemble in reverse order.

NOTE: If fuse needs replaced, interlock assembly must be replaced.

Power Cord

1. Remove outer case and back panel.
2. Disconnect wiring.
3. Remove strain relief by compressing with pliers.
4. Remove power cord.
5. Reassemble power cord in reverse order.

Light Socket

1. Remove outer case.
2. Remove screws securing lamp cover bracket.
3. Unscrew light bulb from socket.
4. Disconnect wire terminals to light socket.
5. Remove screw securing light socket to light retainer.
6. Reassemble light socket in reverse order.

Relay

1. Remove outer case from oven.
2. Disconnect and label wire terminals to relay.
3. Remove screws securing relay to back of oven cavity.
4. Reassemble in reverse order.

Line Filter

1. Remove outer case from oven.
2. Disconnect and label wire terminals to line filter.
3. Remove screws securing line filter to back of oven cavity.
4. Reassemble in reverse order.

Replacing Oven Light Bulb

WARNING

To avoid electrical shock which can cause severe personal injury or death, unplug power cord or open circuit breaker to oven before replacing light bulb. After replacing light bulb, restore power.

CAUTION

To avoid personal injury or property damage, observe the following:

- Allow oven and light bulb to cool.
- Wear gloves when replacing light bulb.

Tools Needed

- Protective gloves
- Phillips screwdriver
- 40-watt, 120-volt appliance bulb (available from authorized distributor or servicer)

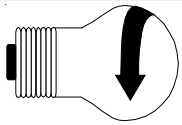

To remove bulb, turn in direction shown.

1. Remove screw from access cover on top left wall of oven exterior. Remove access cover.
2. Remove old bulb and replace with new bulb.
3. Replace access cover and screw by reversing procedure in step 1.

Disassembly

WARNING

To avoid the risk of electrical shock, personal injury or death; disconnect power to oven and discharge capacitors before following any disassembly procedure.

Component Location

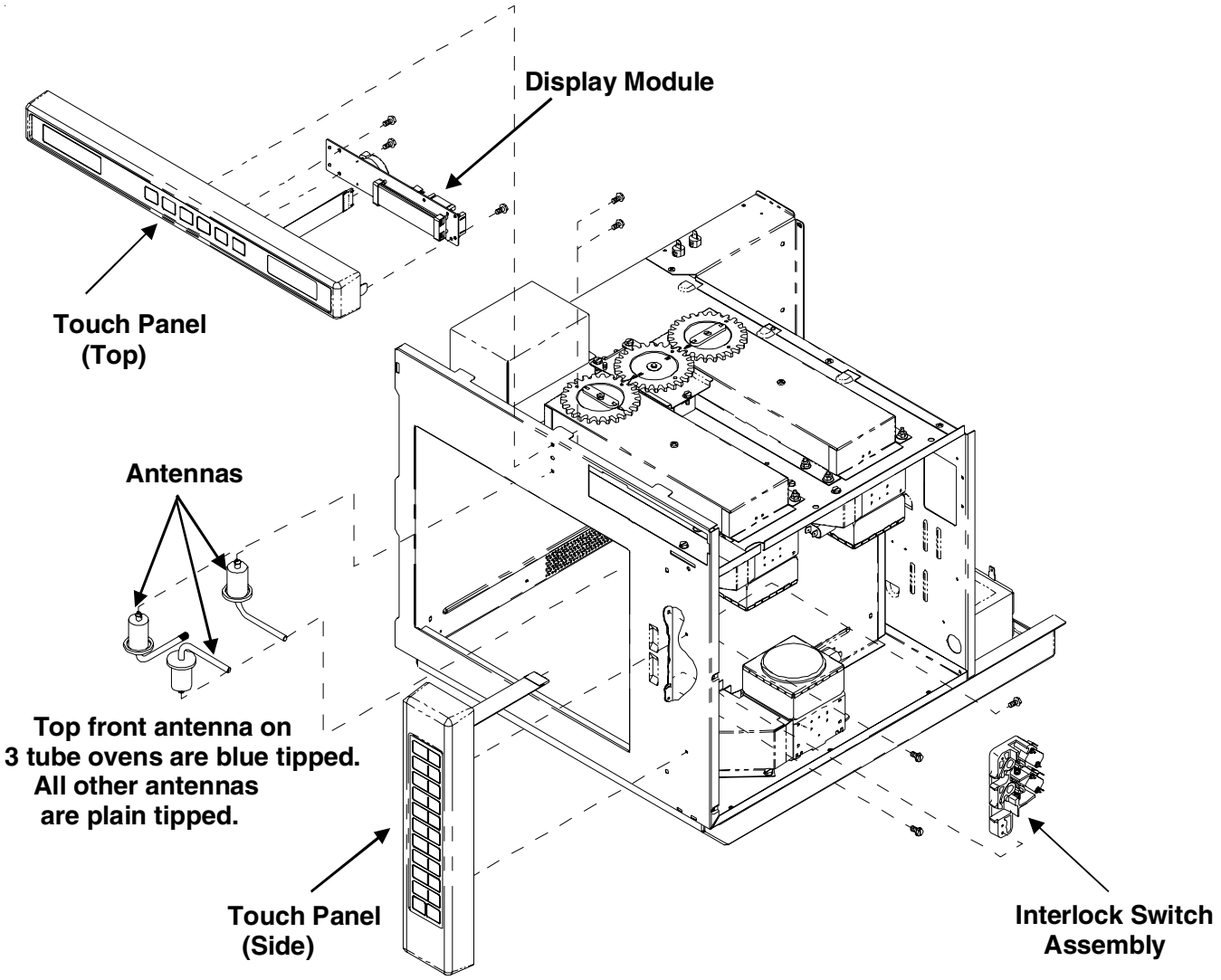

Figure 1

 ©2005 Maytag Services

Disassembly

WARNING

To avoid the risk of electrical shock, personal injury or death; disconnect power to oven and discharge capacitors before following any disassembly procedure.

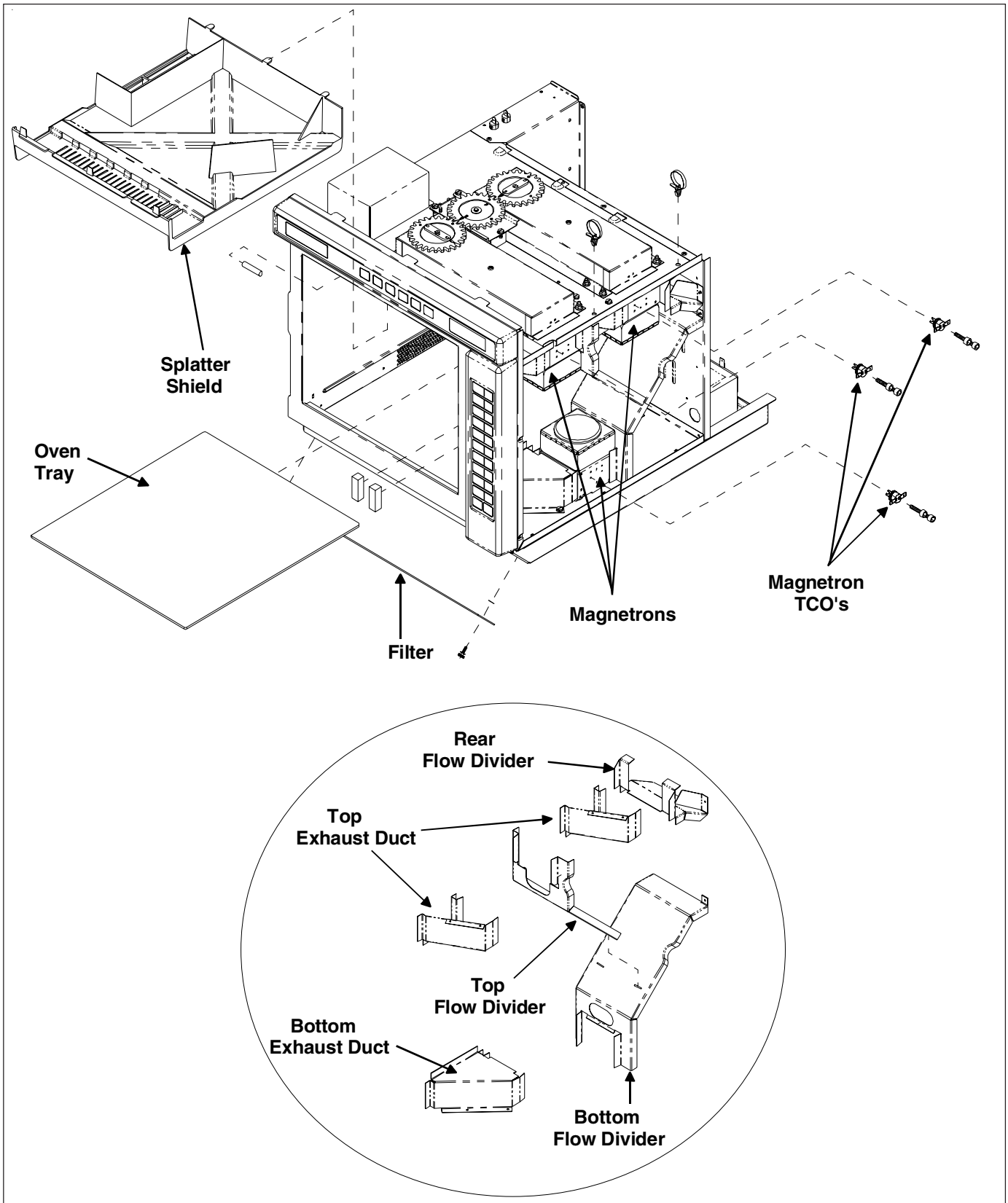

Figure 2

Disassembly

WARNING

To avoid the risk of electrical shock, personal injury or death; disconnect power to oven and discharge capacitors before following any disassembly procedure.

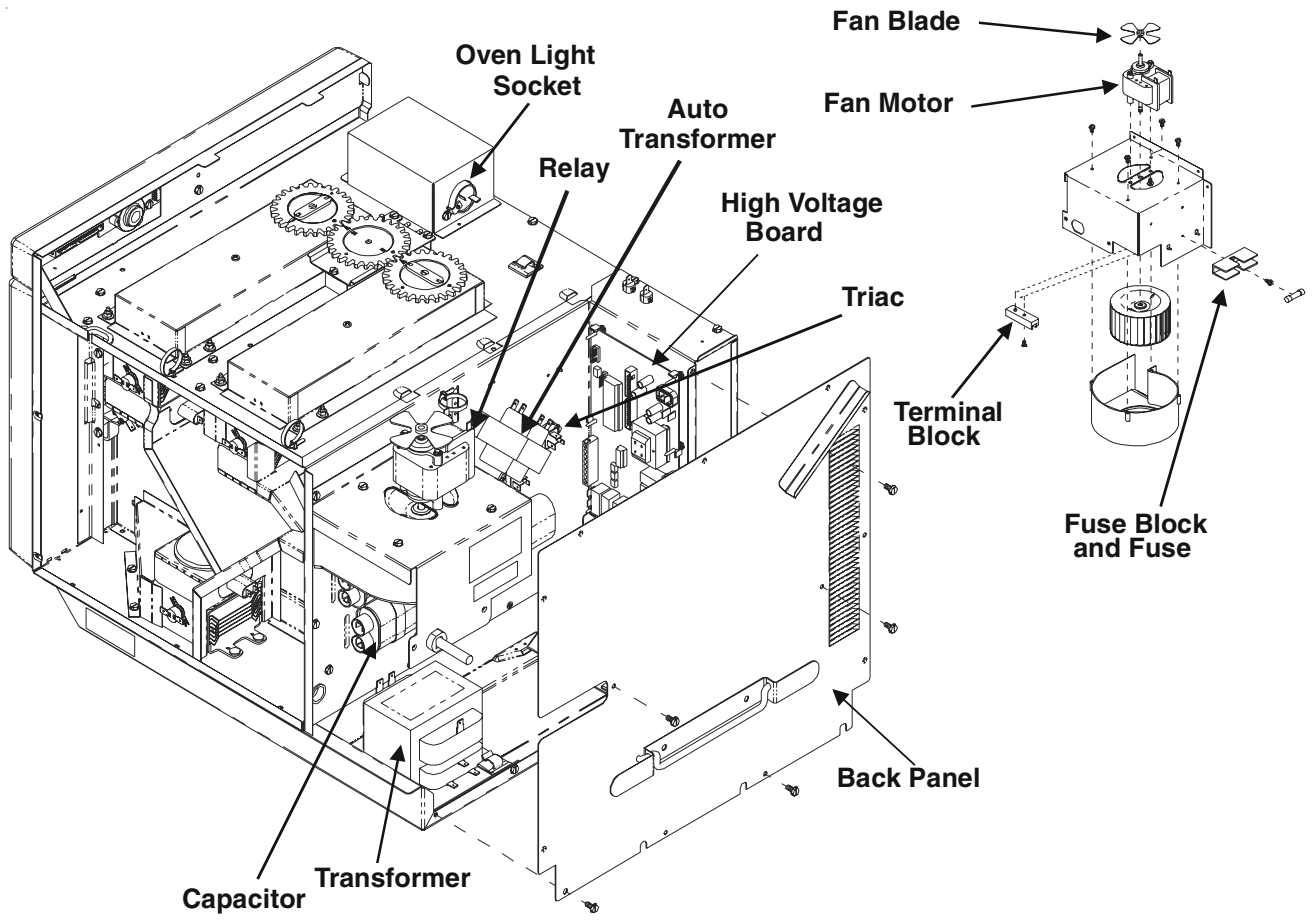

Figure 3

 ©2005 Maytag Services