ALPINE

SERVICE MANUAL

CD/USB RECEIVER WITH ADVANCED BLUETOOTH

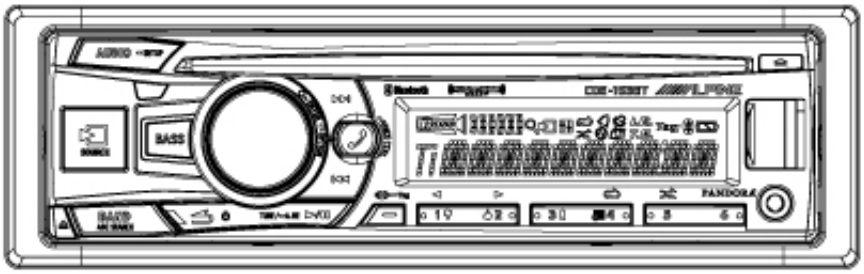

(CDE-153BT)

11 / 13-A
T0111300100
MFAL304A/MFAP302A/MFAC403A

CDE-153BT/CDE-153EBT/CDE-153CBT

Parts Identification

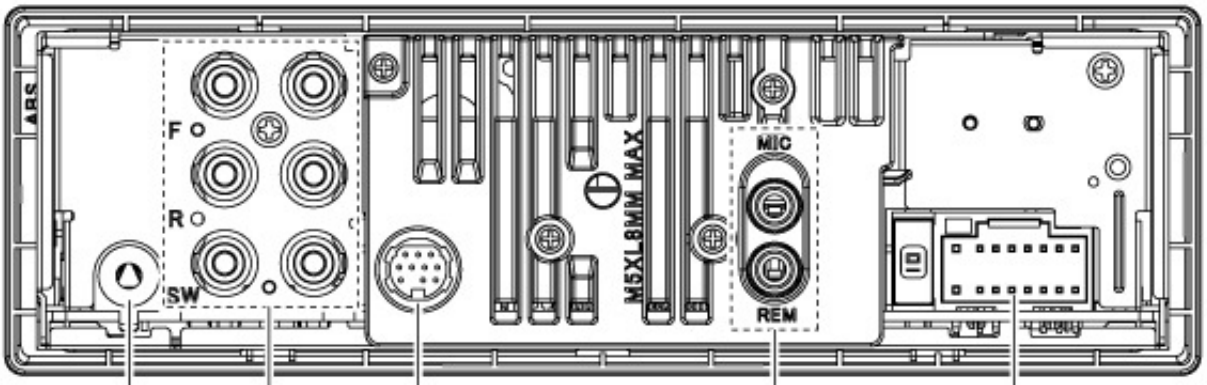

*CB301 : ASSY,A090A0101
(Power Supply Connector)

*JK901 : JAC,CK3-3.5-14D
(MIC Input Connector,
Steering Remote Control Interface Connector)

*DIN901 : DIN,TCS7718-012117 (CDE-153BT only)
(SiriusXM Tuner connector)

*JK300 : RCA,RJ-1346B09-0H0
(Front, Rear, Subwoofer Output RCA Connectors)

*ANT101 : ANT,ARL43.644.692
(Antenna Receptacle)

*CB301 : ASSY,A090A0101

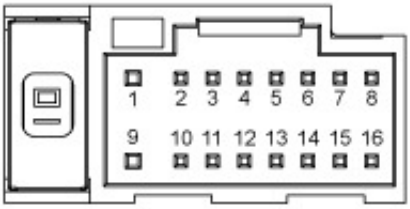

①	BATT	⑨	GND
②	RL-	⑩	FL-
③	RL+	⑪	FL+
④	RR-	⑫	FR-
⑤	RR+	⑬	FR+
⑥	NC	⑭	ILLM
⑦	REMO	⑮	IN-INT (CDE-153BT only)
⑧	P.ANT	⑯	ACC

*DIN901 : DIN,TCS7718-012117 (CDE-153BT only)

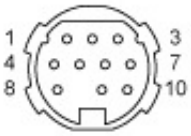

①	AUDIO_L	⑥	TUNER RXD
②	TUNER TXD	⑦	RESERVED
③	RESERVED	⑧	GND_D
④	AUDIO_R	⑨	POWER
⑤	GND_A	⑩	PWREN
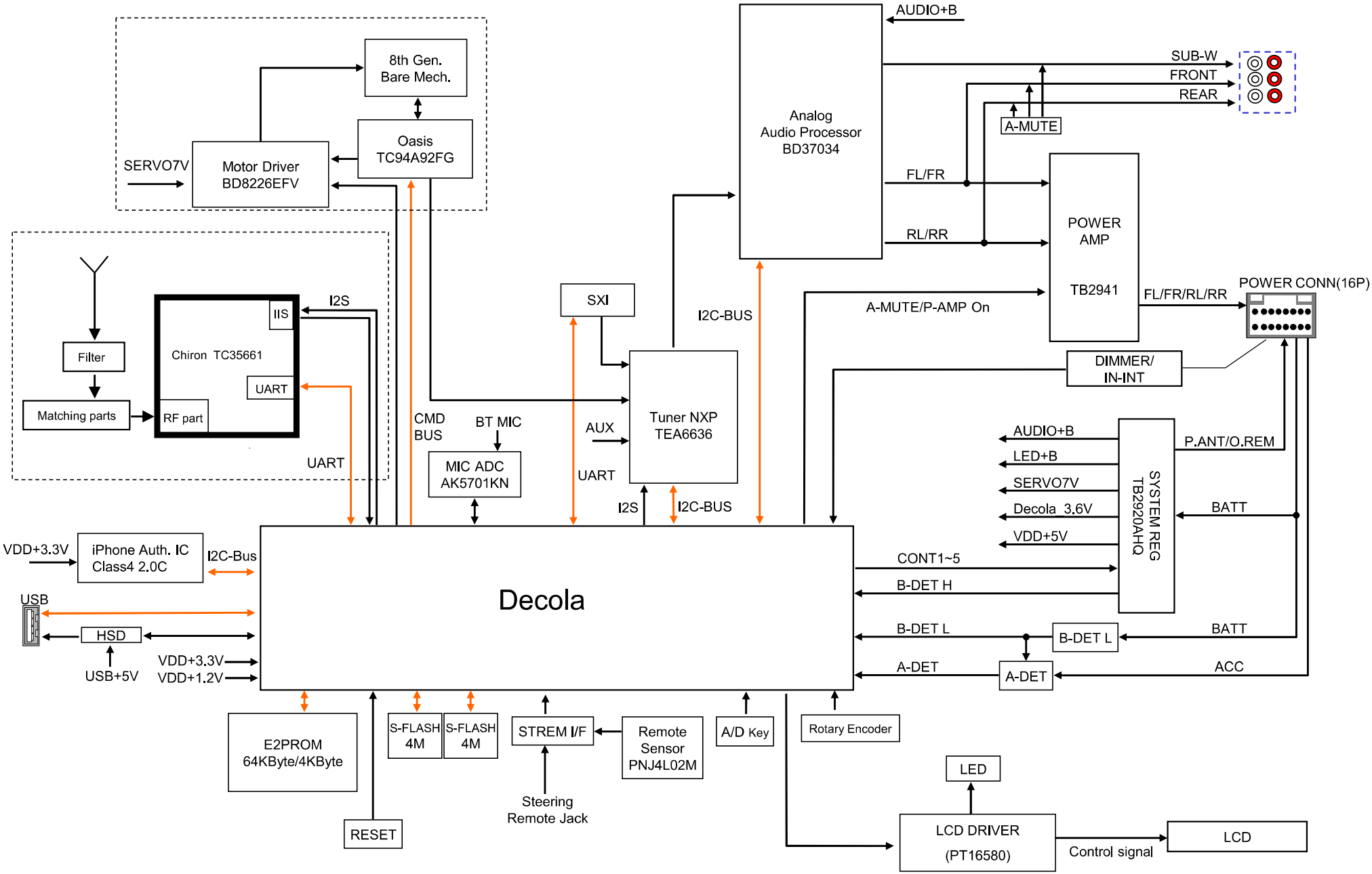
Block Diagram