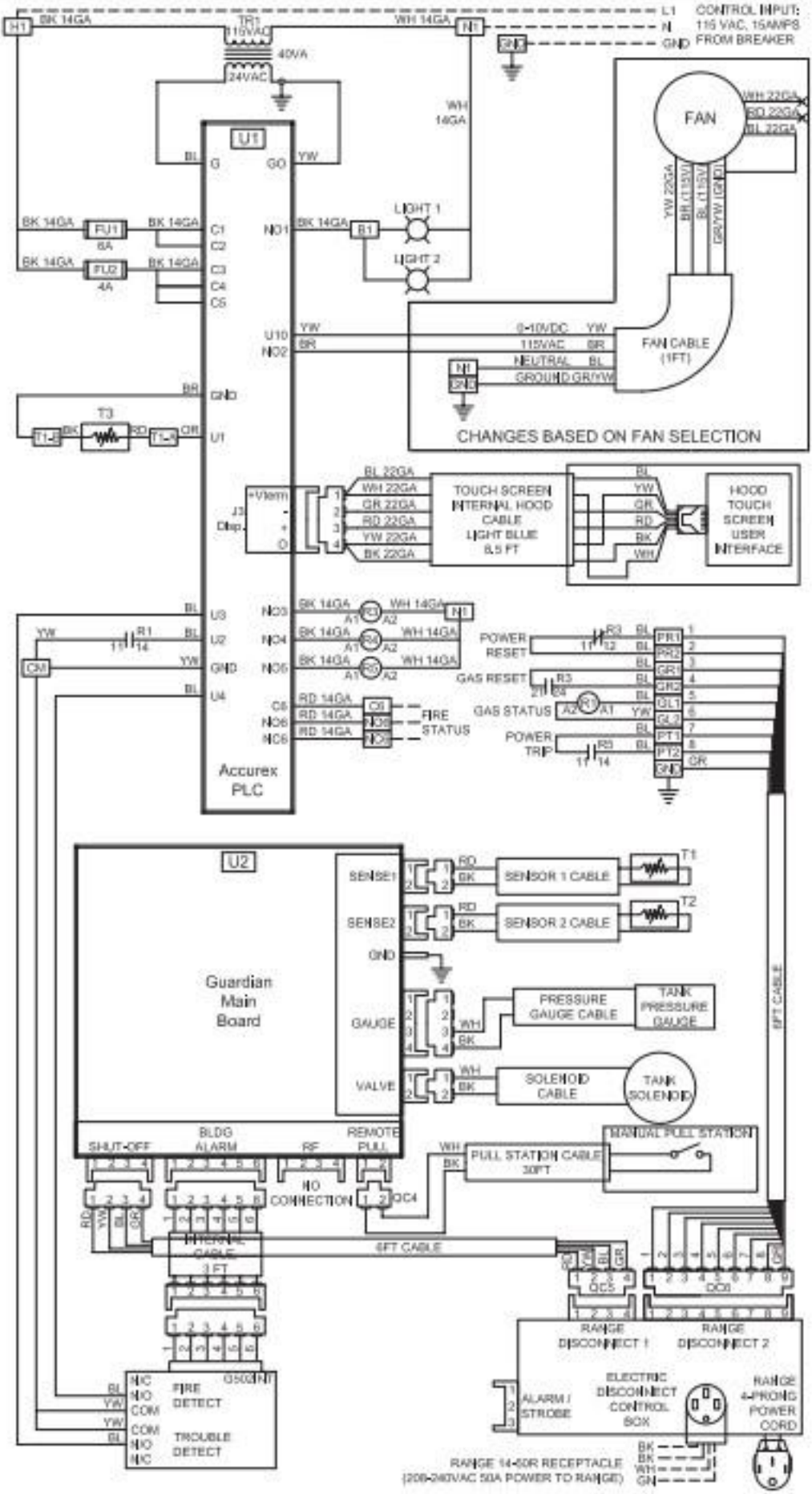
CONTROL INPUT:
115 VAC, 15AMPS
FROM BREAKER
L1
N
GND
H1
BK 14GA
TR1
115VAC
24VAC
40VA
WH 14GA
N1
GND
WH
14GA
U1
BL
G
GO
YW
FAN
WH 22GA
RD 22GA
BL 22GA
YW 22GA
BR (115V)
BL (115V)
GR/YW (GND)
BK 14GA
FU1
6A
BK 14GA
C1
C2
C3
C4
C5
NO1
BK 14GA
B1
LIGHT 1
LIGHT 2
BK 14GA
FU2
4A
BK 14GA
U10
NO2
YW
BR
0-10VDC
YW
115VAC
BR
NEUTRAL
BL
GROUND
GR/YW
FAN CABLE
(1FT)
N1
GND
BR
GND
T3
T1-B
BK
RD
T1-A
OR
U1
CHANGES BASED ON FAN SELECTION
BL 22GA
WH 22GA
GR 22GA
RD 22GA
YW 22GA
BK 22GA
+Vterm
J3
Disp.
TOUCH SCREEN
INTERNAL HOOD
CABLE
LIGHT BLUE
8.5 FT
BL
YW
GR
RD
BK
WH
HOOD
TOUCH
SCREEN
USER
INTERFACE
BL
U3
NO3
BK 14GA
WH 14GA
R3
A1
A2
N1
YW
R1
11
14
BL
U2
NO4
BK 14GA
WH 14GA
R4
A1
A2
CM
YW
GND
NO5
BK 14GA
WH 14GA
R5
A1
A2
BL
U4
C6
RD 14GA
C6
NO6
RD 14GA
NO6
NO5
RD 14GA
NO5
FIRE
STATUS
Accurex
PLC
POWER
RESET
R3
11
12
BL
PR1
PR2
BL
GAS RESET
R3
21
24
BL
GR1
GR2
BL
GAS STATUS
A2
R1
A1
YW
GL1
GL2
BL
POWER
TRIP
R5
11
14
BL
PT1
PT2
GND
OR
U2
SENSE1
RD
BK
SENSOR 1 CABLE
T1
SENSE2
RD
BK
SENSOR 2 CABLE
T2
GND
Guardian
Main
Board
GAUGE
WH
BK
PRESSURE
GAUGE CABLE
TANK
PRESSURE
GAUGE
VALVE
WH
BK
SOLENOID
CABLE
TANK
SOLENOID
8FT CABLE
SHUT-OFF
BLDG
ALARM
RF
REMOTE
PULL
WH
BK
PULL STATION CABLE
30FT
MANUAL PULL STATION
NO
CONNECTION
QC4
RD
YW
BL
GR
INTERNAL
CABLE
3 FT
4FT CABLE
QC5
QC6
RANGE
DISCONNECT 1
RANGE
DISCONNECT 2
GS02
N1
NIC
NO
COM
FIRE
DETECT
COM
NO
NIC
TROUBLE
DETECT
ALARM /
STROBE
ELECTRIC
DISCONNECT
CONTROL
BOX
RANGE
4-PRONG
POWER
CORD
RANGE 14-50R RECEPTACLE
(208-240VAC 50A POWER TO RANGE)
BK
BK
WH
GN

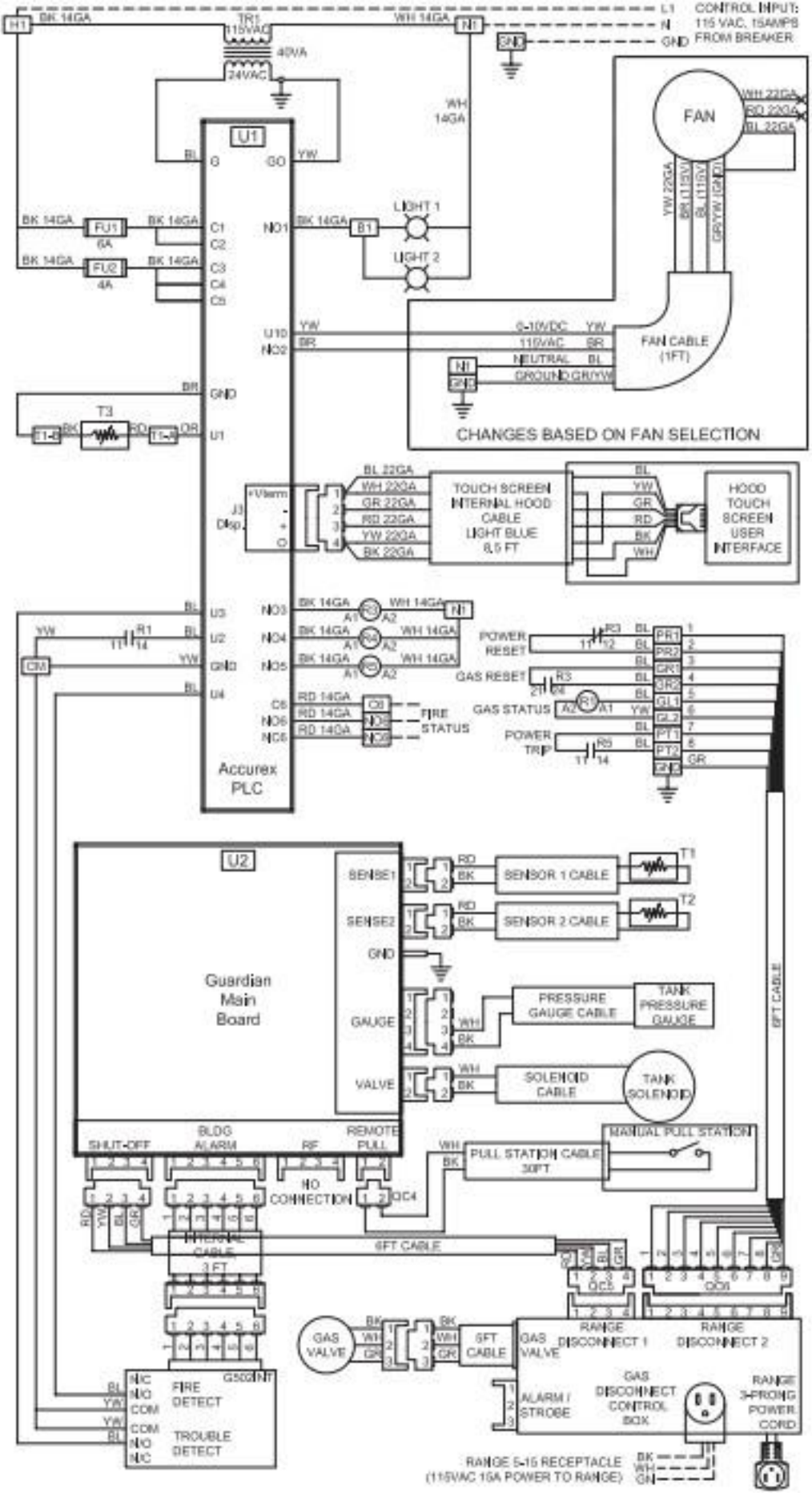
CONTROL INPUT:
115 VAC, 15AMPS
FROM BREAKER
L1
N
GND
TR1
115VAC
40VA
24VAC
FAN
U1
LIGHT 1
LIGHT 2
FU1
6A
FU2
4A
FAN CABLE
(1FT)
CHANGES BASED ON FAN SELECTION
T3
TOUCH SCREEN
INTERNAL HOOD
CABLE
LIGHT BLUE
8.5 FT
HOOD
TOUCH
SCREEN
USER
INTERFACE
POWER
RESET
GAS RESET
GAS STATUS
POWER
TRIP
FIRE
STATUS
Accurex
PLC
U2
Guardian
Main
Board
SENSE1
SENSE2
GND
GAUGE
VALVE
SENSOR 1 CABLE
SENSOR 2 CABLE
PRESSURE
GAUGE CABLE
TANK
PRESSURE
GAUGE
SOLENOID
CABLE
TANK
SOLENOID
SHUT-OFF
BLDG
ALARM
RF
REMOTE
PULL
NO
CONNECTION
MANUAL PULL STATION
PULL STATION CABLE
30FT
INTERNAL
CABLE
3 FT
6FT CABLE
GAS
VALVE
5FT
CABLE
RANGE
DISCONNECT 1
RANGE
DISCONNECT 2
GAS
DISCONNECT
CONTROL
BOX
ALARM /
STROBE
RANGE
3-PRONG
POWER
CORD
FIRE
DETECT
TROUBLE
DETECT
RANGE 5-15 RECEPTACLE
(115VAC 15A POWER TO RANGE)