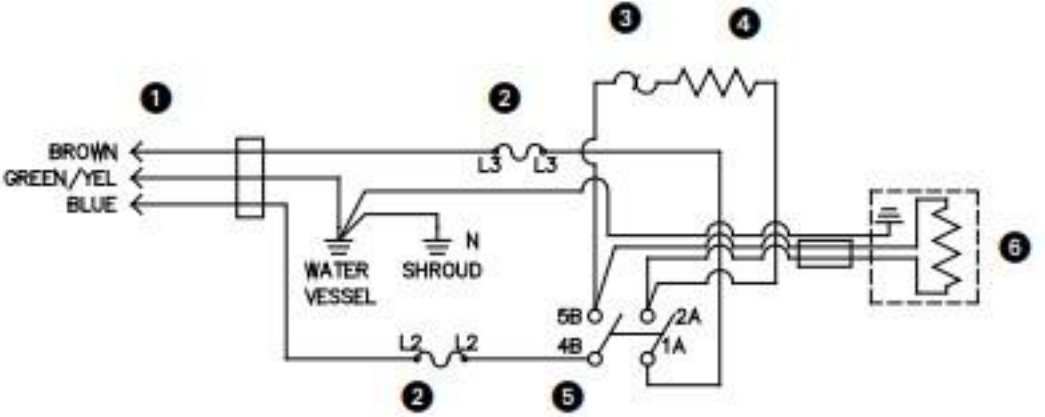
1
2
3
4
BROWN
GREEN/YEL
BLUE
L3
L3
N
WATER
VESSEL
SHROUD
5B
2A
4B
1A
L2
L2
2
5
6

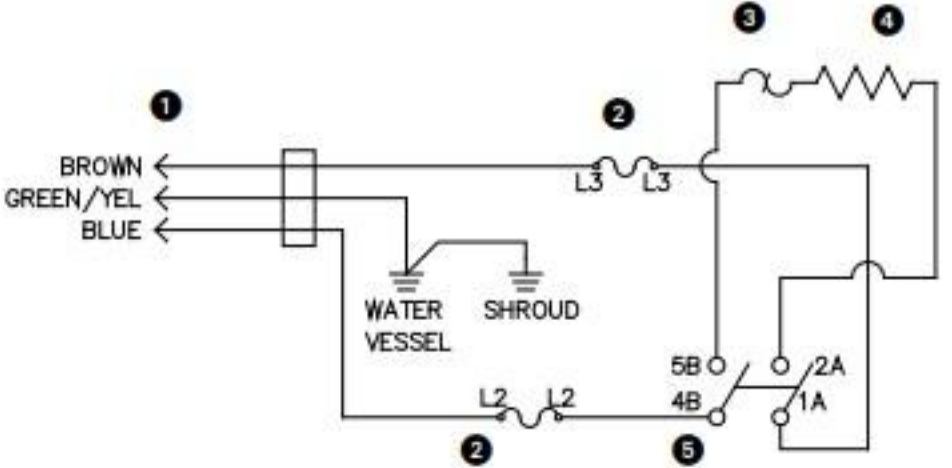
1
2
3
4
BROWN
GREEN/YEL
BLUE
L3
L3
WATER
VESSEL
SHROUD
5B
2A
4B
1A
L2
L2
2
5

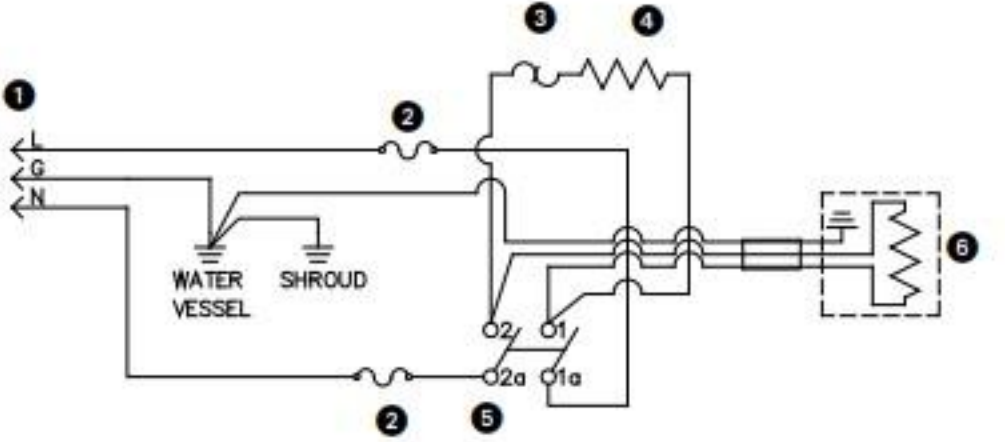
1
2
3
4
5
6
L
G
N
WATER
VESSEL
SHROUD
2
1
2a
1a

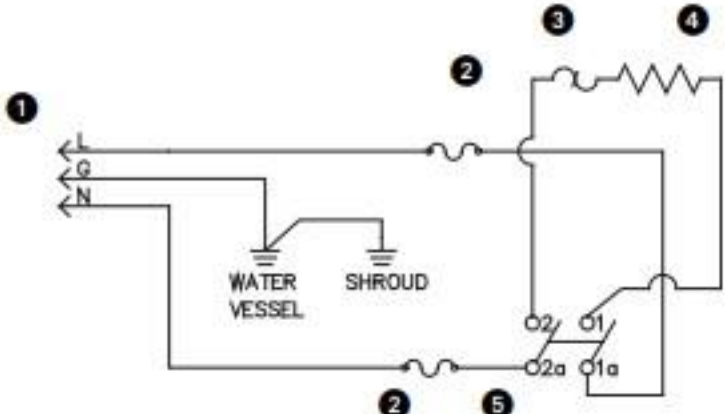
1
2
3
4
L
G
N
WATER
VESSEL
SHROUD
2
5
2
1
2a
1a

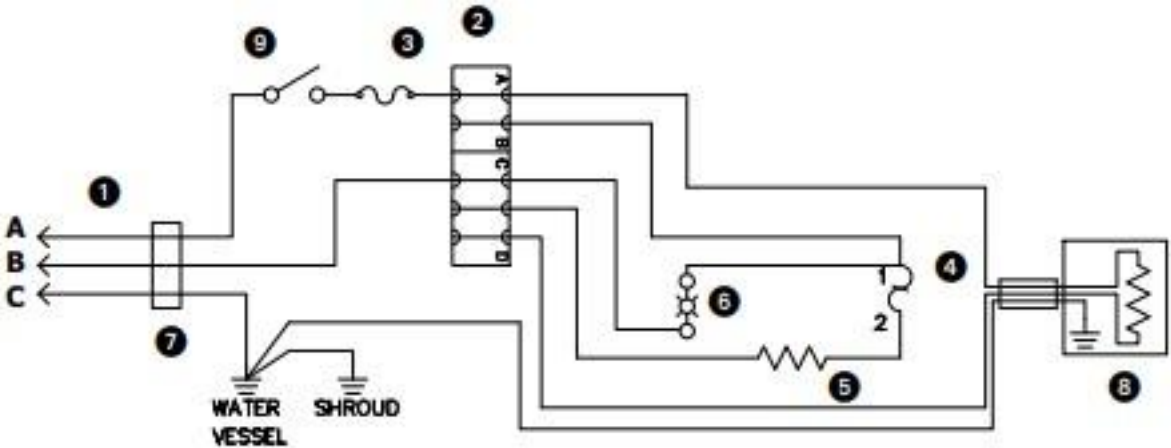
9
3
2
A
B
C
D
1
A
B
C
7
6
4
1
2
5
8
WATER
VESSEL
SHROUD

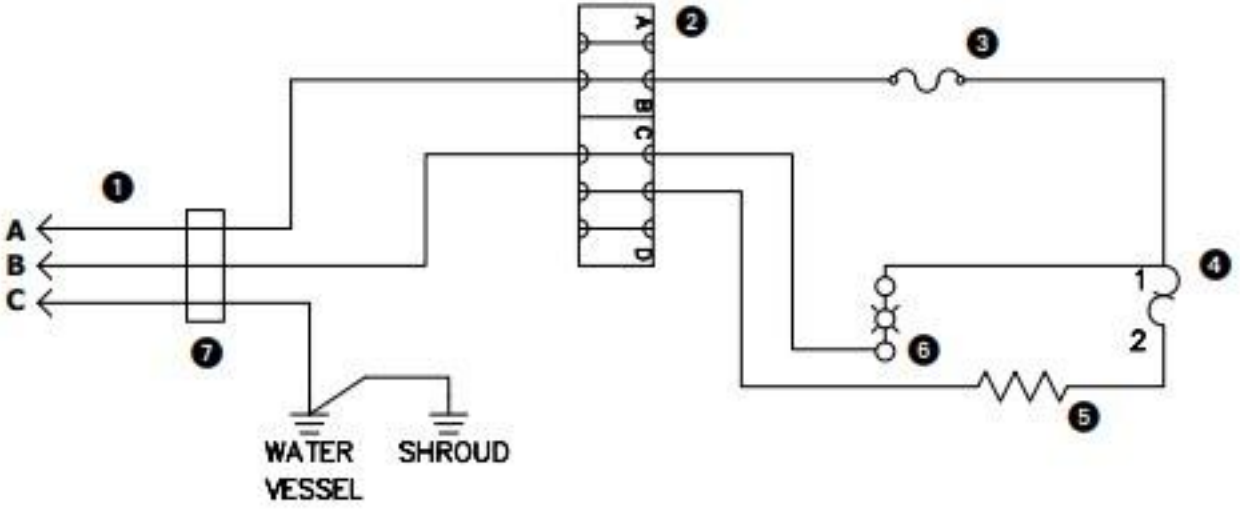
A
B
C
D
1
2
3
4
5
6
7
A
B
C
D
1
2
WATER VESSEL
SHROUD

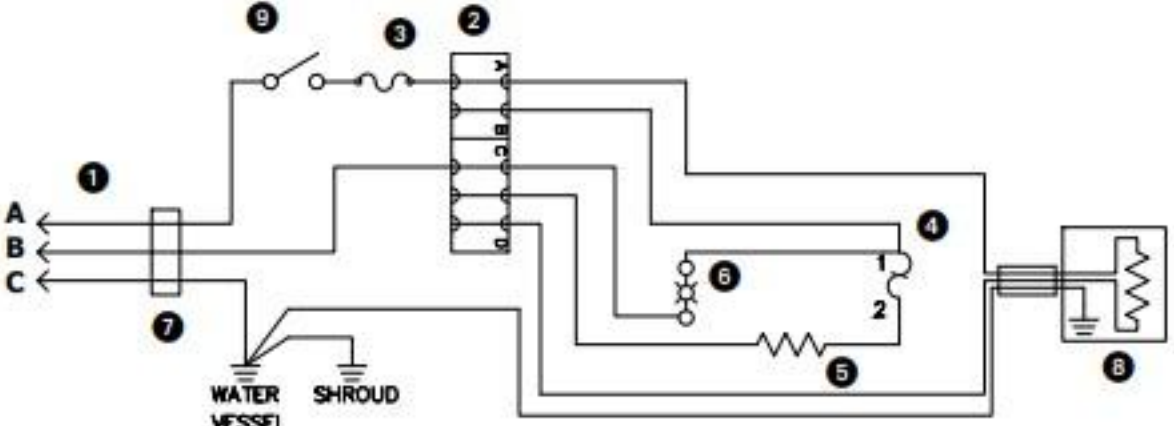
9
3
2
1
A
B
C
4
6
1
2
5
7
8
WATER
VESSEL
SHROUD

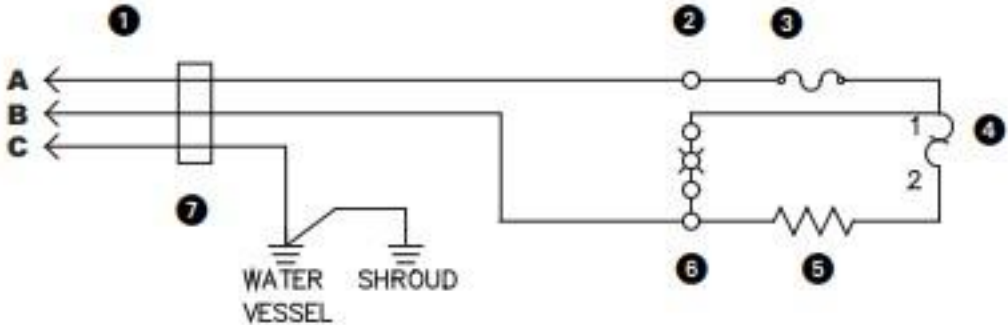
1
2
3
A
B
C
1
2
4
7
WATER VESSEL
SHROUD
6
5