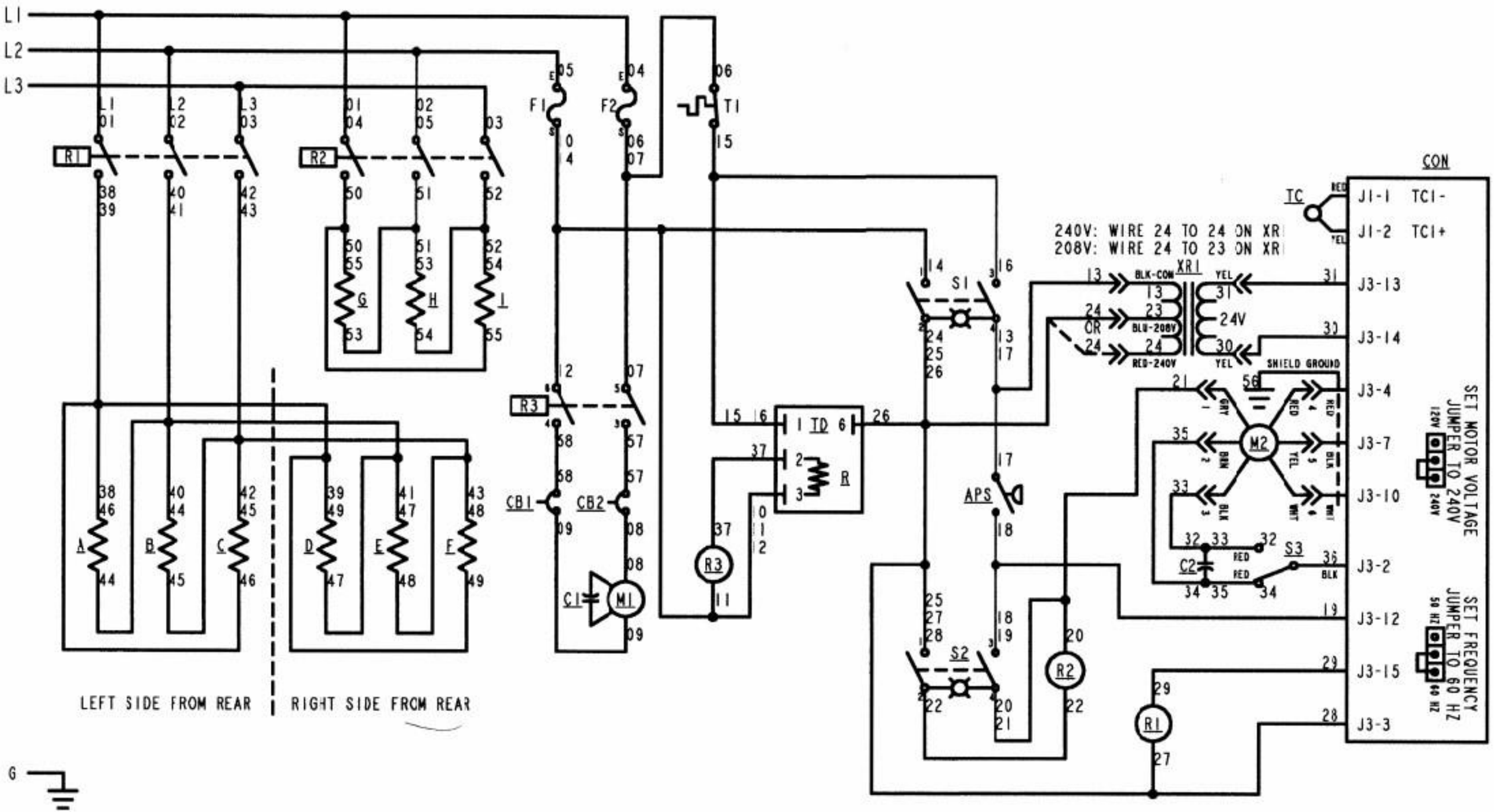
L1
L2
L3
R1
R2
R3
F1
F2
T1
S1
S2
S3
APS
CB1
CB2
C1
C2
M1
M2
TD
R
XR1
TC
CON
240V: WIRE 24 TO 24 ON XR1
208V: WIRE 24 TO 23 ON XR1
BLK-COM
BLU-208V
RED-240V
24V
SHIELD GROUND
J1-1 TC1-
J1-2 TC1+
J3-13
J3-14
J3-4
J3-7
J3-10
J3-2
J3-12
J3-15
J3-3
SET MOTOR VOLTAGE JUMPER TO 240V
SET FREQUENCY JUMPER TO 60 HZ
LEFT SIDE FROM REAR
RIGHT SIDE FROM REAR
G

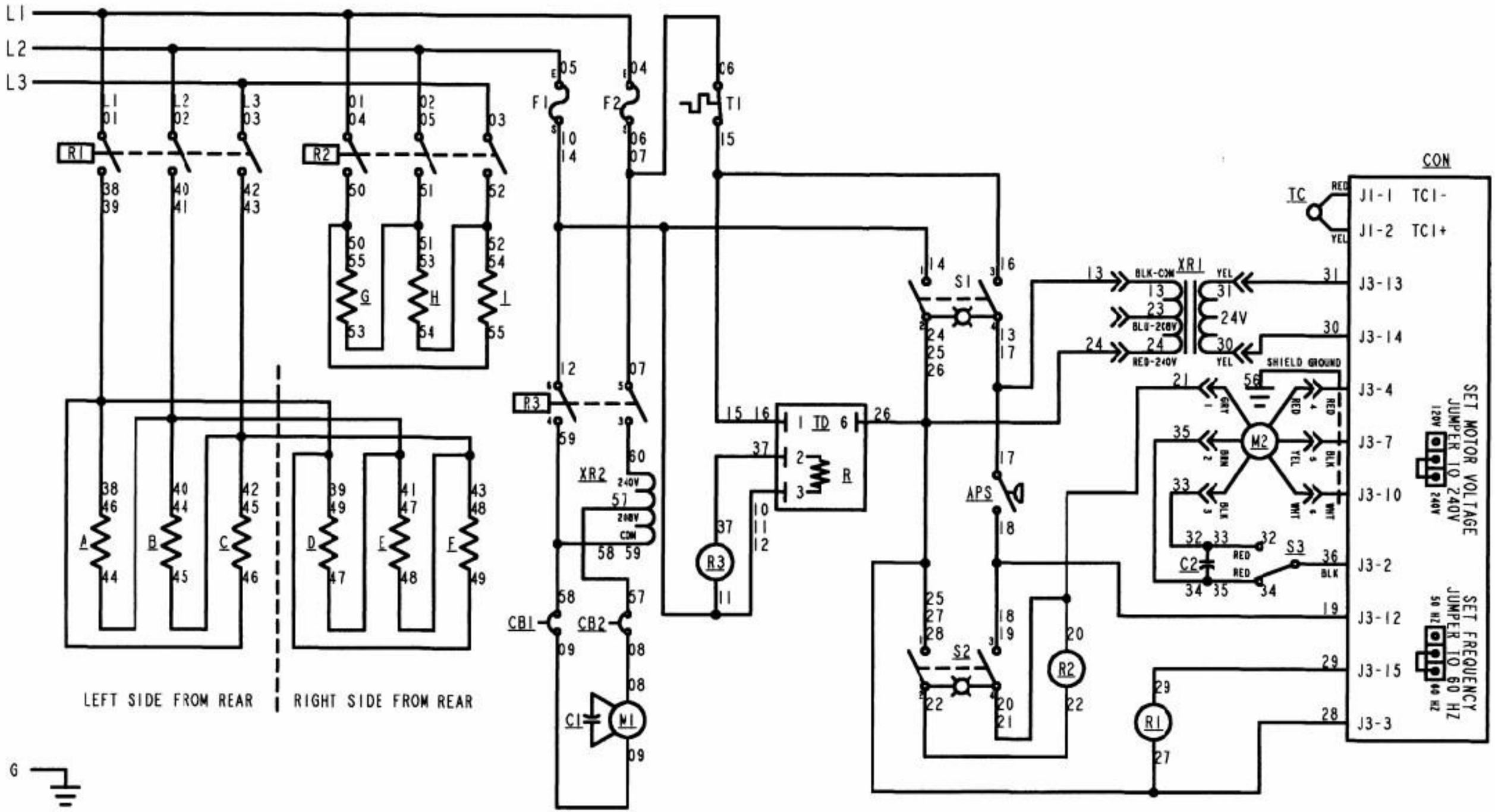
L1
L2
L3
R1
R2
R3
F1
F2
T1
S1
S2
S3
APS
TD
R
XR1
XR2
CB1
CB2
C1
C2
M1
M2
G
H
I
A
B
C
D
E
F
TC
CON
J1-1 TC1-
J1-2 TC1+
J3-13
J3-14
J3-4
J3-7
J3-10
J3-2
J3-12
J3-15
J3-3
BLK-COM
BLU-208V
RED-240V
YEL
24V
SHIELD GROUND
240V
208V
COM
SET MOTOR VOLTAGE
JUMPER TO 240V
120V
240V
SET FREQUENCY
JUMPER TO 60 HZ
50 HZ
60 HZ
LEFT SIDE FROM REAR
RIGHT SIDE FROM REAR
G

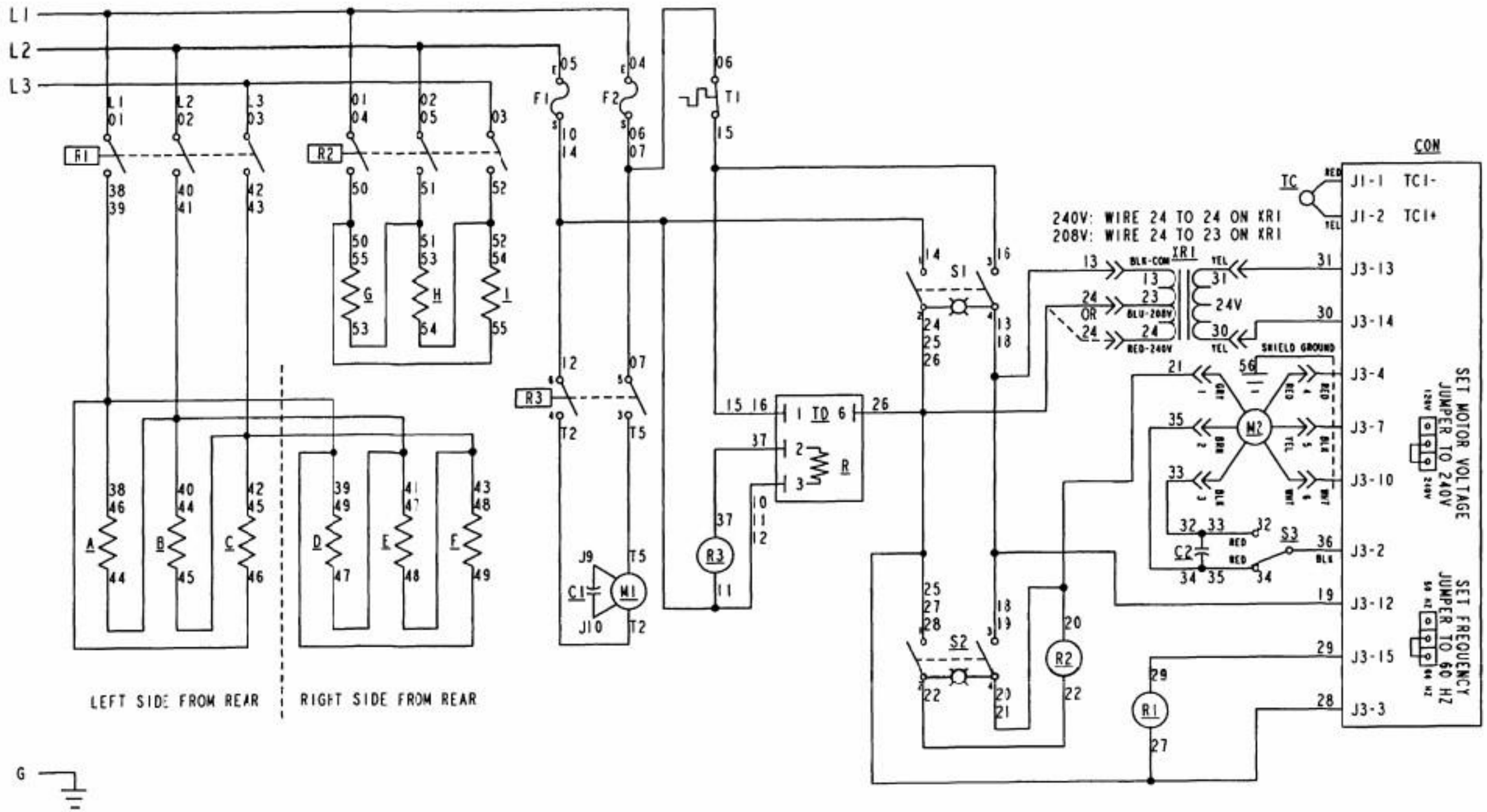
L1
L2
L3
F1
R2
R3
T1
T2
T5
F1
F2
G
H
I
A
B
C
D
E
F
J9
J10
C1
M1
TD
R
S1
S2
S3
C2
M2
R1
R2
R3
XR1
TC
CON
240V: WIRE 24 TO 24 ON XR1
208V: WIRE 24 TO 23 ON XR1
BLK-COM
BLU-208V
RED-240V
24V
SHIELD GROUND
J1-1 TC1-
J1-2 TC1+
J3-13
J3-14
J3-4
J3-7
J3-10
J3-2
J3-12
J3-15
J3-3
SET MOTOR VOLTAGE JUMPER TO 240V
SET FREQUENCY JUMPER TO 60 HZ
LEFT SIDE FROM REAR
RIGHT SIDE FROM REAR
G